PIONEER®
The Art of Entertainment

Service Manual

• KEH-M7400RDS/EW

ORDER NO.
CRT1429

MULIT-CD CONTROL FM/MW/LW TUNER DECK AMPLIFIER

KEH-M7400RDS EW

CASSETTE CAR STEREO WITH FM/MW/LW ELECTRONIC TUNER

KEH-5400RDS EW

KEH-5401RDS EW, IT

Note:

- See The separate manual CX-197 for the cassette mechanism description.

Model	Service Manual	Cassette Mechanism Assembly
KEH-M7400RDS/EW	CX-197(CRT1428)	EXK1735
KEH-5400RDS/EW KEH-5401RDS/EW KEH-5401RDS/IT	CX-197(CRT1328)	EXK1785

- Dolby noise reduction manufactured under license from Dolby Laboratories Licensing Corporation. "Dolby" and the double-D symbol are trademarks of Dolby Laboratories Licensing Corporation.

CONTENTS

PIONEER ELECTRONIC CORPORATION 4-1, Meguro 1-Chome, Meguro-ku, Tokyo 153, Japan
PIONEER ELECTRONICS SERVICE INC. P.O. Box 1760, Long Beach, California 90801 U.S.A.
PIONEER ELECTRONICS OF CANADA, INC. 505 Cochrane Drive, Markham, Ontario L3R 8E3 Canada
PIONEER ELECTRONIC [EUROPE] N.V. Keetberglaan 1, 2740 Beveren, Belgium
PIONEER ELECTRONICS AUSTRALIA PTY. LTD. 178-184 Boundary Road, Braeside, Victoria 3195, Australia TEL: [03] 580-9911

© PIONEER ELECTRONIC CORPORATION 1991

EU DEC. 1991 Printed in Japan

1. FEATURES

- Multi CD Control function for full control over optional magazine type Multi-Play CD Player.
- RDS system provides automatic Alternative Frequency reception, Network/station name display, and traffic information reception.
- Built-in highly sensitive "Automatic Reception Control" (ARC) for automatic control of stereo separation, muting and frequency characteristics to match the strength of the FM signal.
- The Best Stations Memory automatically memorizes the six best (strongest) stations in the six preset button in the order of their strength.
- Auto reverse function eliminates the need to turn the cassette over and allows uninterrupted playback.
- Built-in Dolby B NR for reduced tape hiss.
- Radio/CD intercept allows uninterrupted reception during tape's Fast Forwarding/Rewinding.
- Removable front panel protects against theft.
- A selectable dual fader with a preout terminal allows you to choose from a 2-speaker system to either 4 or a maximum 6-speaker system.
- Dolby noise reduction manufactured under license from Dolby Laboratories Licensing Corporation.
  "DOLBY" and the double-D symbol DD are trademarks of Dolby Laboratories Licensing Corporation.

2. SPECIFICATIONS

General

Power source ..... 14.4 V DC (10.8 – 15.6 V allowable)
Grounding system ..... Negative type
Max. current consumption ..... 7.5 A
Dimensions (chassis) ..... 180 (W) x 50 (H) x 150 (D) mm
(front face) ..... 188 (W) x 58 (H) x 20 (D) mm
Weight ..... 1.6 kg

Amplifier

Maximum power output ..... 25 W x 2/15 W x 4 (EIAJ)
(KEH-M7400RDS/EW, KEH-5400/EW)
Maximum power output ..... 25 W x 2 (EIAJ)
(KEH-5401/EW, IT)
Continuous power output ..... 11 W x 2 (1% dist. at 1 kHz)
Load impedance ..... 4 Ω (4 – 8 Ω allowable)
Preout output level/output impedance ..... 500 mV/1 kΩ
(KEH-M7400RDS/EW, KEH-5401/EW, IT)
Tone controls (bass) ..... ±10 dB (100 Hz)
(treble) ..... ±10 dB (10 kHz)
Loudness contour ..... +12 dB (100 Hz), +7 dB (10 kHz)
(Volume: –30 dB)

Tape player

Tape ..... Compact cassette tape (C-30 – C-90)
Tape speed ..... 4.76 cm/sec. (+0.14 cm/sec., –0.05 cm/sec.)
Fast forward/rewind time ..... Approx. 100 sec. for C-60
Wow & flutter ..... 0.13 % (WRMS)
Frequency response ..... Metal: 40 – 17,000 Hz (±3 dB)
Stereo separation ..... 45 dB
Signal-to-noise ratio
..... Metal: Dolby B NR IN: 63 dB (IEC-A network)
Dolby NR OUT: 55 dB (IEC-A network)

FM tuner

Frequency range ..... 87.5 – 108 MHz
Usable sensitivity ..... 11 dBf (1.0 μV/75 Ω, mono, S/N: 30 dB)
50 dB quieting sensitivity ..... 16 dBf (1.7 μV/75 Ω, mono)
Signal-to-noise-ratio ..... 70 dB (IEC-A network)
Distortion ..... 0.3 % (at 65 dBf, 1 kHz, stereo)
Frequency response ..... 30 – 15,000 Hz (±3 dB)
Stereo separation ..... 40 dB (at 65 dBf, 1 kHz)

MW tuner

Frequency range ..... 531 – 1,602 kHz
Usable sensitivity ..... 18 μV (25 dB) (S/N: 20 dB)
Selectivity ..... 50 dB (±9 kHz)

LW tuner

Frequency range ..... 153 – 281 kHz
Usable sensitivity ..... 30 μV (30 dB) (S/N: 20 dB)
Selectivity ..... 50 dB (±9 kHz)

Note:

Specifications and the design are subject to possible modification without notice due to improvements.

3. USING THE REMOVABLE FRONT PANEL

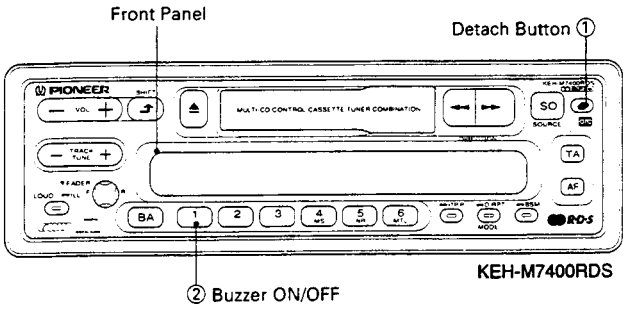

The front panel of this unit can be removed to prevent theft.
Also, to prevent forgetting to remove the front panel, 5 seconds after the ignition is turned off, if the front panel is still attached, a buzzer will sound for a few seconds.
If you wish to cancel the sound of the buzzer, please do as follows. Keep the button ② depressed and turn the vehicle's ignition key from OFF to ON. By repeating this procedure, the sound of the buzzer will be restored.

Detaching the Front Panel

1. Press button ①, and the right-hand side of the panel will eject.
2. To remove the front panel, pull its right-hand side toward you.

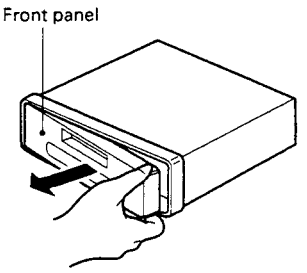

- Take care not to put pressure on the display or drop the front panel.

3. Enclose for safekeeping the front panel that is removed in the supplied protective case.

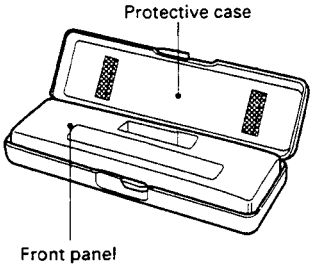

Replacing the Front Panel

Push the front panel into the main body.

- When replacing the front panel, do not put pressure on the display or control buttons.

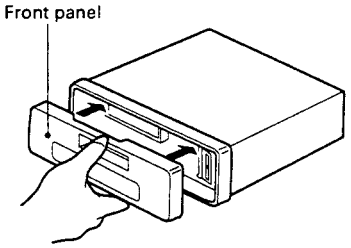

- Note that if the front panel is not attached correctly, pushing button ① may not release the panel, and the other control buttons may not function.

Precautions

- Do not touch the contacts on the front panel or on the unit body, since this may result in poor electrical contact. If dirt or other foreign substances get on the contacts, wipe them with a clean, dry cloth.

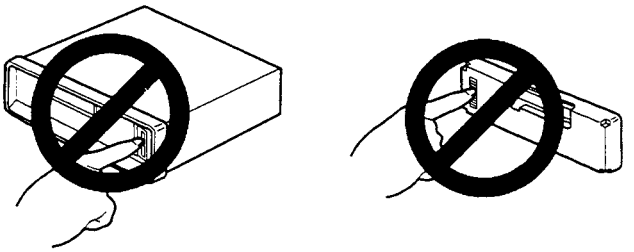

Precautions When Handling the Front Panel

- Do not leave the front panel in any area exposed to high temperatures or direct sunlight.
- Do not drop the front panel or otherwise subject it to strong impact.
- Do not allow such volatile agents as benzine, thinner, or insecticides to come into contact with the surface of the front panel.
- Never try to disassemble the front panel.

4. ADJUSTING VOLUME AND TONE

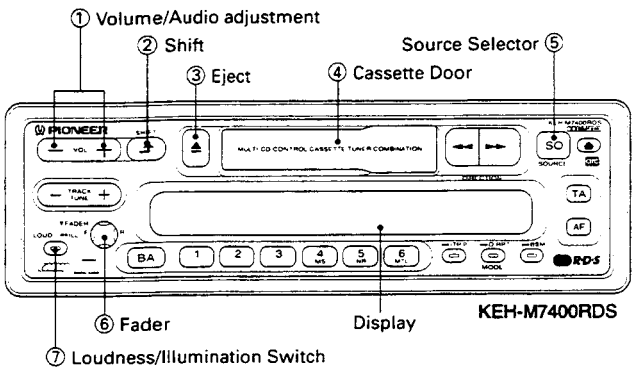

Switching Power On

Radio

Press button ⑤ to switch the tuner power on. Press button ⑤ again to switch the power off.

Tape

Insert the cassette tape through the Cassette Door ④, and the power will be automatically turned on to get the tape start being played back. To eject the tape, press the button ③.

- You will hear a few consecutive clicks from your unit when you have started the engine with the cassette tape inserted. The sounds are only the sign of your unit's mechanical preparation being made, but does not indicate at all its functional failure.

Changing the Source

When the cassette tape is inserted, the source changes at each press of the button ⑤: Tape — Radio — OFF. When a Multi-Play CD Player — optionally available Multi-Play CD Player CDX-M40, for example — is connected to your unit, the source changes: Multi-Play CD Player — Tape — Radio — OFF.

Adjusting Audio

Press button ① to adjust the volume. Each press of button ② changes the display and the function of button ① as follows:
Volume — Fader — Bass — Treble — Balance

Adjusting Volume

Pressing the (+) side of button ① increases the volume, while the (–) side decreases it.

VOL 12

Adjusting the Fader

This fader controls the balance between speakers 1 and 2, and speakers 3, which are shown in Figure 1 on page 5. Press the (–) side of button ① to raise the volume of speakers 1 and 2 only; press the (+) side to raise the volume of speakers 3 only.

FAD 0

Note:

- The unit has two faders: the electronic preamp fader and the power fader controlled by fader control knob ⑥. The use of both faders depend on the way the speakers are connected. For details, see "Using the Fader" on page 5.

Adjusting Bass

Pressing the (+) side of button ① increases bass, while the (–) side decreases bass.

BAS 0

Adjusting Treble

Pressing the (+) side of button ① increases treble, while the (–) side decreases treble.

TRE 0

Adjusting Balance

Pressing the (–) side of button ① shifts the balance to the left speaker, while the (+) side shifts it to the right speaker.

BAL 0

- When you're adjusting fader, bass, treble or balance settings, the indicator will stop at the center setting.
  About 5 seconds after adjustment has been made, the display returns to its previous state.

Using the Fader

The unit is provided with two faders: the electronic preamp fader controlled by buttons ① and ②, and the power fader controlled by fader control knob ⑥.
Electronic preamp fader ①, ② controls the balance between speakers 1 and 2, and speakers 3 as shown in Figure 1, (See "Adjusting the Fader" on page 4.)
Power fader ⑥ controls the balance between speakers 1 and speakers 2, as shown in Figure 1.
Pressing knob ⑥ inward, turn it to the right to raise the volume of speakers 2 only, or turn it to the left to raise the volume of speakers 1 only.

- The use of both faders depend on the way the speakers are connected. For details, refer to the next section, "Speaker Connections and the Use of Both Faders."

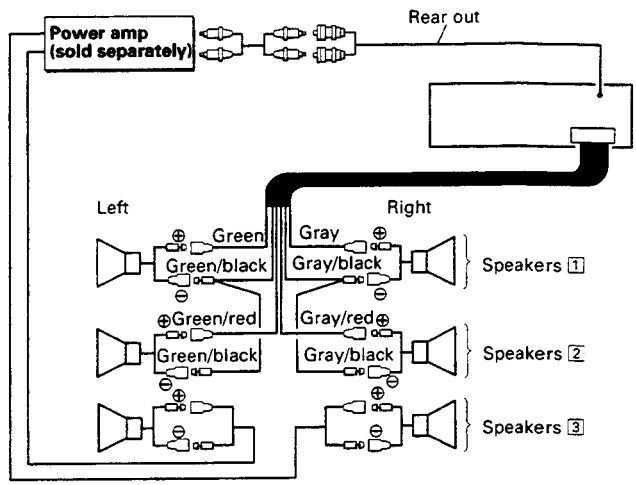

Fig. 1

Speaker Connections and the Use of Both Faders

Example 1: 2/4-speaker system (1)

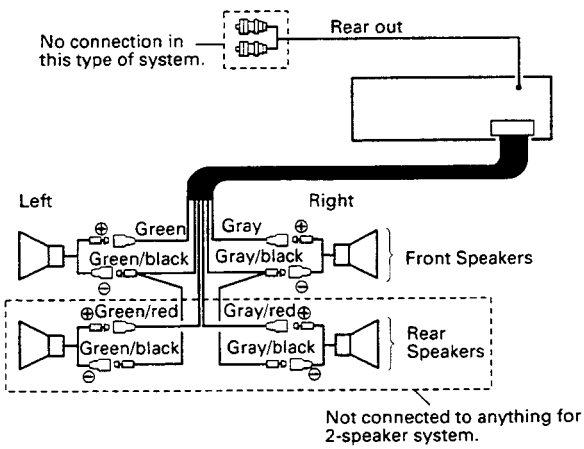

2-speaker system

Electronic preamp fader ①, ②:
Set to **"FAD 0"**.
Power fader ⑥:
Set to the center position. (A click is felt when the knob reaches the center position.)

4-speaker system (1)

Electronic preamp fader ①, ②:
Set to **"FAD 0"**.
Power fader ⑥:
Controls the balance between the front and rear speakers.

Example 2: 4-speaker system (2)

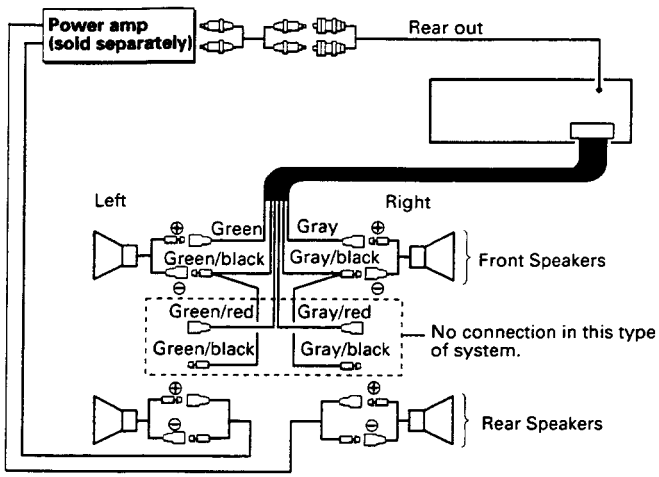

Electronic preamp fader ①, ②:
Controls the balance between the front and rear speakers.
Power fader ⑥:
Set to the center position. (A click is felt when the knob reaches the center position.)

Example 3: 6-speaker system

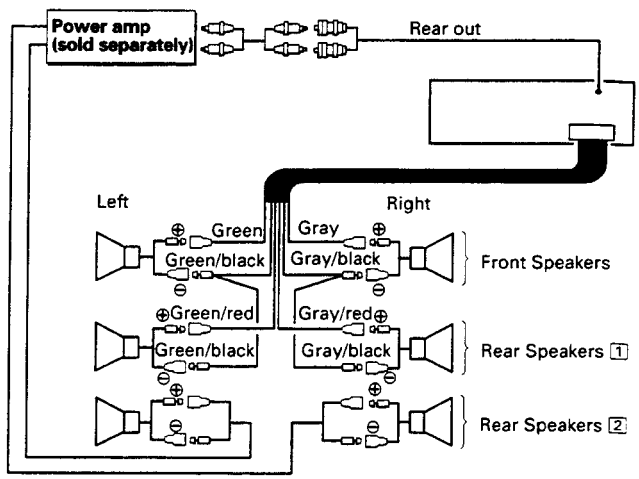

Electronic preamp fader ①, ②:
Controls the balance between the front and rear speakers 1,and rear speakers 2.
Power fader ⑥:
Controls the balance between front and rear speakers 1.

Using the Loudness Function

Press button ⑦ and the **"LOUD"** indicator will appear on the display. This "loudness" function enhances both the high and low ranges of sound to give even more power to output even at low volumes.

Switching Illumination Color

You can select either green or amber for the switch illumination color. To switch the color, hold down button ⑦ for two seconds.

Regarding the Cellular Telephone Muting

When the audio mute terminal of a separately sold PIONEER cellular telephone is connected to the cellular mute terminal of the unit, the following function becomes active.
When a phone call is received or made on the cellular telephone, the volume is automatically lowered by the unit, and **"CALL"** is shown on the display. (The **"CALL"** indication flashes when receiving a Traffic Announcement (TA).)

When a call is ended, the volume returns to the previous level and the previous display is shown again.

- When the volume is lowered by the operation of the cellular telephone muting function (**"CALL"** is shown on the display), the unit's shift Button ② is disabled.

5. USING THE RADIO

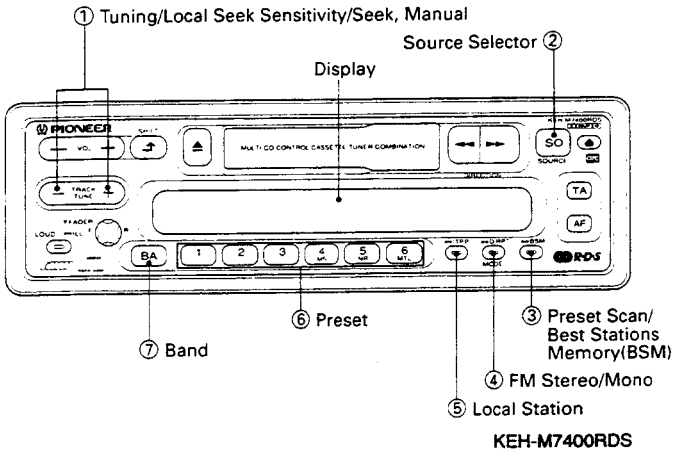

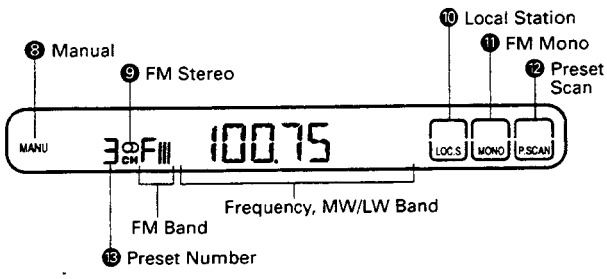

1 Press button ② to switch the radio power on.

2 Press button ⑦ to select a band.

F I → F II → F III → MW/LW
(FM1) (FM2) (FM3) (MW/LW)

Use Button ① to switch between MW (531—1,602 kHz) and LW (153—281 kHz).

3 Use seek tuning to tune in a frequency.

Ensure that **"MANU"** ⑧ is not indicated on the display. (If so, turn it off by simultaneously pressing the (+) and the (–) sides of button ①.)

Press either the (+) side or the (–) side of button ①. When the (+) side is pressed, the tuner will automatically receive high frequencies.

When the (–) side is pressed, it will automatically receive low frequencies.

4 Adjust volume and tone (see page 4).

5 Assign the tuned frequency to one of the buttons in Bank ⑥ (preset memory).

Press and hold down one of the button in Bank ⑥ for at least two seconds. The frequency is assigned to the selected button when the preset number ⑬ stops flashing on the display. Up to 18 FM stations (6 each for FM1, FM2 and FM3), and six MW/LW stations can be assigned to the preset memory buttons in Bank ⑥.

6 Once a frequency is assigned to a button in Bank ⑥, you just need to press that button to tune it in.

This also causes the number of the button pressed to appear at position ⑬ on the display.

Preset Scan Tuning

This function lets you automatically monitor the stations assigned to the preset buttons.

1. Pressing button ③ turns on the frame of preset scan ⑫ and flashes preset number ⑬.
   Each station assigned to the buttons in Bank ⑥ will be automatically tuned in for about eight seconds.
2. When you hear a station that you like, press button ③ again to cancel preset scan tuning and remain at that station.

BSM (Best Stations Memory)

This function automatically locates stronger stations and automatically assigns their frequencies to the buttons in Bank ⑥, from strongest to weakest. It comes in handy when trying to find local stations while driving.

1. Press button ⑦ and select a band.
2. Hold down button ③. After about two seconds, a "beep" will sound to signal that the BSM search has started. At this time, **"BSM"** will flash on the display.

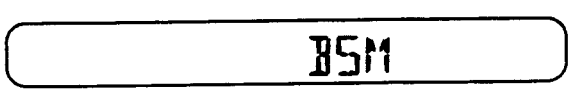

3. The frequency display will return once BSM search is complete, and frequencies are assigned to buttons 1 through 6 in Bank ⑥.

- At the end of the BSM search, the displayed frequency is that assigned to button 1 of Bank ⑥.
- If there are fewer than six strong stations in the area, some of the buttons in Bank ⑥ will not be assigned frequencies, so they will retain any frequencies assigned to them previously.
- BSM search may take as long as 30 seconds in areas where there are few strong stations.
- You can cancel BSM search by pressing button ③ again.

Manual Tuning

Use manual tuning when stations are too weak to be picked up by seek tuning.

1. Turn on **"MANU"** ⑧ by simultaneously pressing the (+) side and the (–) side of button ①.
2. Each press of the (+) side of button ① increases the frequency in 50 kHz steps in the FM band, 9 kHz in the MW band and 1 kHz in the LW band. Pressing the (–) side of button ① decreases the frequency. Holding down either side of button ① changes the frequency at high speed.

Switching between FM Stereo and Mono

Generally, it is best to allow the ARC (Automatic Reception Control) function to automatically set the optimum listening conditions. ⓓ ❾ turns on during stereo broadcast is in reception. When there is a large amount of noise, you can press button ④ for clearer mono reception (The frame of FM mono ❶❶ turns on).

Adjusting Seek Sensitivity

The seek tuning function of this tuner lets you select between a local setting for reception of strong stations only, and a DX (distant) setting for reception of weaker stations. The local setting also has four seek tuning sensitivity levels for FM and two levels for MW/LW to match local conditions.

Changing the Local Seek Sensitivity

1. Use button ⑦ to select a band.
2. Hold down the button ⑤ for more than two seconds, and the display will show you the current local seek sensitivity for about five seconds.

(Example: LOC-2)

3. While the local seek sensitivity remains on the display, press the (+) side of button ① to increase the sensitivity level, and the (–) side to decrease the level as shown below.
   FM : LOC-1 ⇌ LOC-2 ⇌ LOC-3 ⇌ LOC-4
   MW/LW: LOC-1 ⇌ LOC-2
   The LOC-4 setting allows reception of only the strongest stations, while lower settings let you receive progressively weaker stations.
- The display of local seek sensitivity returns to the frequency when about five seconds have elapsed after the change of sensitivity.

Switching between Local and DX

Press button ⑤ to switch between Local and DX (distant) seek tuning. When the frame of local seek ❶❶ is lit, seek tuning is performed with the local seek sensitivity. Otherwise, seek tuning is performed with the DX seek sensitivity.

6. USING THE RDS FUNCTION

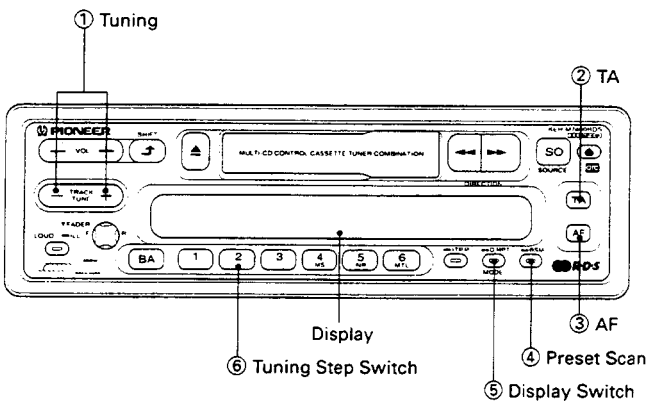

KEH-M7400RDS

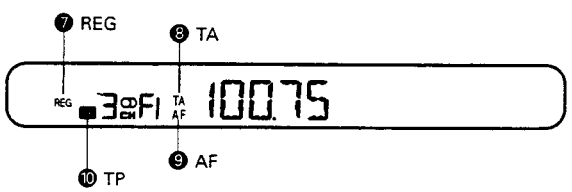

What is RDS?

RDS (Radio Data System) according to a CENELEC EN50067 is a system for transmitting data signals from FM broadcast transmitter along with the normal sound program. These data signals, which are imperceptable to listeners, are intended to aid radio listeners in tuning their receivers to a desired station. RDS receivers can decode these data signals for display or control purposes.

RDS digital signal includes various data, such as PI, PS, AF, TP, and TA.

PI ..... **Program Identification Code**
PS ..... **Program Service Name**
AF ..... **List of Alternative Frequencies**
TP ..... **Traffic Program Identification Code (Similar to SK signal of ARI system)**
TA ..... **Traffic Announcement Code (Similar to DK signal of ARI system)**

RDS Function of this Unit

This unit has the following functions for making use of RDS data.

- PS, the name of the currently listened station is displayed.
- AF (Alternative Frequency) function. This enables the receiver to automatically retune to more suitable frequencies transmitting the same program.
- TP/TA, user selectable reception of the traffic information service, offered by RDS.

Network/Station Name Display

Switch the tuner on and choose one of the three FM bands.
When you tune into an RDS station with manual or seek tuning, the frequency display changes to the network/station name display after a few seconds by means of the PS code.

- The RDS functions of this unit use RDS codes transmitted along with FM broadcasts. RDS doesn't work on the MW or LW bands.
- The RDS functions may not work properly in areas where the RDS transmissions are at an experimental stage or where there are flaws in the broadcasting system.

- Hold down button ⑤ for more than 2 seconds to change the network/station name display to a frequency display. The frequency will be displayed while the button is being held down.

AF (Alternative Frequency) Function

This receiver retunes automatically to a more suitable transmitter, contained in the list of Alternative Frequencies (AF), to enable the motorist to keep listening to programs in the same network.

Example:
If a motorist travels as shown below, from point a A to point B, (and has selected AF function) then the receiver will automatically retune to a more suitable frequency transmitting the same program. This is shown by the automatic retuning from 98.5 MHz to 107.5 MHz to 96.0 MHz to 102.5 MHz.

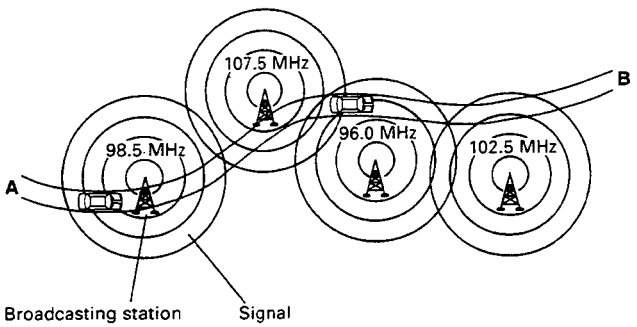

- During the day, some radio stations may broadcast regional programs which are different from those broadcasted by other stations within the same network. If the receiver is tuned in to such a regional program and you wish to continue listening to it, hold down button ③ for more than 2 seconds, to select the regional function. REG ❼ will appear on the display.
  Using the AF Regional function, the receiver will tune automatically to those stations broadcasting the same regional program. However, there are cases where some stations do not contain the required AF list data for this function to work. (This is not a malfunction of the unit.)
  Hold down button ③ again for more than two seconds to cancel the regional function. REG ❼ will go off.
- If the receiver is set to FM beforehand, and the main unit's cassette tape or the multi-play CD player is being listened to, pressing down button ③ will illuminate AF ❾ and allow the AF function to work. However the radio sound will remain muted.

Alternative Frequency Function

To activate the Alternative Frequency Function, press button ③, AF ❾ will appear on the display. Once tuned to a RDS station, as long as you drive within an area served by the same network, the receiver will automatically retune to a more suitable station transmitting the same program, by utilizing the PI code and AF list data.

PI SEEK

- **"PI SEEK"** will appear on the display, if the AF function has been selected, and a suitable AF station cannot be found. In this case, the receiver will mute the radio sound and search the frequency band, in order to find a station with the same PI code. The receiver will return to the original frequency if a suitable PI code can not be found.
- **The AF function will not work in the following cases:**
  — when the receiver is tuned to a non-RDS station.
  — when the RDS station does not transmit any AF list data.
  — when the receiver can not receive the AF list data for some reason.
  In all of these cases, if the tuned station's signal falls below a certain level, AF ❾ will flash on the display to indicate the AF function is unable to function.
- If button ③ is pressed before selecting a preset RDS station in memory, the Alternative Frequency Function operates when the preset station is being recalled.

Traffic Information Reception

When a traffic information station (TP or SK station) is selected TP ❿ will light on the display, thus indicating traffic report can be received. When pressing button ②, Traffic reports waiting status will be entered. When the traffic report begins (when receiving TA code or DK signal from transmitter), the unit will switch from the cassette or the CD sound to the traffic report.

- The volume of the traffic report reception can be adjusted during the reception of a traffic report. The next time that a report is received, the volume will be at the previous setting. However, if the preset volume of the traffic reception is below that of the present source, the volume of the traffic reception will not decrease, and the preset volume of the traffic reception will be set to that of the source.
- If the radio band is already set to the FM band, even when listening to the cassette or the multi-play CD player, when the button ② is pushed, the radio will be powered on, and traffic report waiting will begin. When a traffic report begins, the system will switch the sound source from cassette or the CD to the traffic report.
- While the button ② is on, (TA ❽ is shown on the display), and you are listening to either the cassette or multi-play CD player, should the traffic report station broadcast become weak, the radio will start BSA (Best TP or SK Station Auto Search) 10 seconds after TP ❿ disappears from the diplay. The tuner will tune to the strongest TP or SK station, and will stand by for a traffic bulletin. BSA does not work when the AF function is selected, so turn off button ③ when you want to use BSA.

- If you are listening to the cassette or the CD and button ② is pressed, TA ❽ will light and the radio display will appear for several seconds. If button ④ is pressed during this mode, the unit will begin the TIPS sequence (automatic monitoring of preset TP or SK stations) and all TP or SK stations that have been preset to memory on the band will be scanned to await any traffic reports.
- During TIPS operation, if the signals from all of the TP or SK stations in preset memory become weak and difficult to receive for 3 minutes, then BSA reception will begin automatically.
- If button ② is pressed in an area or a country where the traffic information service is not available, seek tuning and preset scan tuning will not pick up any station. In this case, an alarm will sound after about 30 seconds from when button ② was pressed, warning the driver to switch it off. This alarm will last for about 10 seconds.
- About 30 seconds after TP ❿ disappears from the display, which occurs if the signal from the TP or SK station becomes weak, an alarm sounds for ten seconds to tell you to tune to another TP or SK station.

Tuning Functions on each RDS modes

Tuning Mode	AF Mode	TA Mode & AF plus TA Mode
Seek Tuning will stop to find,	RDS Stations	TP or SK Stations
P.Scan will select and scan the preset memory with,	RDS Stations	TP or SK Stations
BSM will select and memorize in presets,	RDS Stations	TP or SK Stations

Non-RDS station such as those using the Swedish MBS system may be tuned in as RDS station, but this is due to both systems using the same 57 kHz subcarrier frequency and is not a mulfunction of the unit.

Tuning Steps

The tuning step is normally 50 kHz during seek tuning on an FM band. This tuning step changes to 100 kHz during AF reception or traffic report reception. If desired, you may set a tuning step of 50 kHz for AF reception or traffic report reception by holding down the button ⑥ while turning the ignition key from OFF to ON.

- During manual tuning, the step does not change; it remains fixed at 50 kHz.
- The tuning step will return to 100kHz if the batteries supply is temporarily disconnected or the clear button is pressed.
- When the AF reception function is on, only those stations being broadcast at 100 kHz steps are subject to AF reception (CENELEC STANDARD).

7. USING THE TAPE DECK

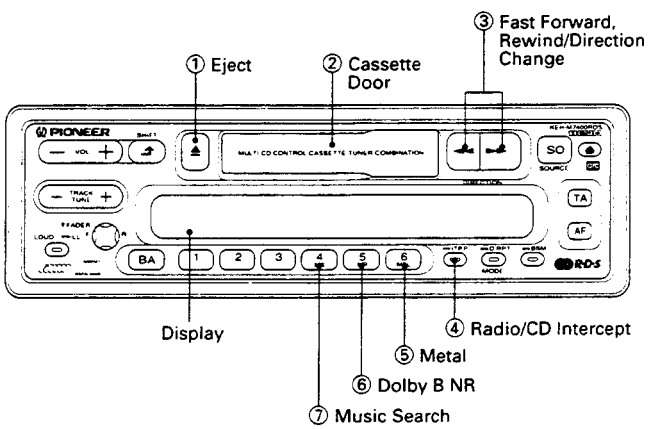

KEH-M7400RDS

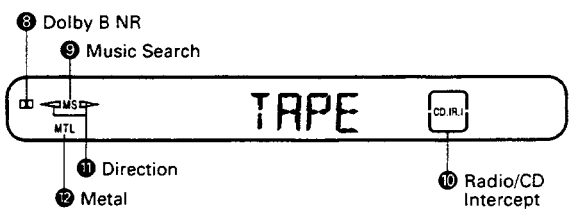

1 Insert the cassette tape into the slot ②, and power will be turned on and the tape begin being played back.
At this time, the tape running direction indicator ⓫ will light up.

2 Adjust volume and tone (see page 4).

3 To eject the cassette tape, press the button ①.

- A loose or warped label on a cassette tape may interfere with the eject mechanism of the unit or cause the cassette to become jammed in the unit. Avoid using such tapes or remove such labels from the cassette before attempting use.
- Do not try to eject the cassette immediately after insertion, as it will cause malfunction. Wait a few seconds.

Changing Program

Push the fast forward and rewind buttons ③ together to switch from one side of the tape to the other (from Side A to Side B or vice versa).

Using Fast Forward and Rewind

Since the transport can be in either direction, both the left and right high-speed tape transport buttons ③ can be regard as fast forward/rewind buttons.
For fast forward, press the high-speed tape transport button ③ that corresponds to the direction that is shown by the direction indicator ⓫.
When the end of the tape is reached, playback will automatically begin from the opposite side of the tape (Auto-reverse).
For rewind, press the button ③ that is opposite that of the direction shown by the direction indicator ⓫. When the end of the tape is reached, playback will automatically begin from the beginning of the same side of the tape (Auto-replay).
Fast forward and rewind can be terminated by pressing the respective opposite high-speed tape transport button ③.

- The indicator ⓫ flashes simultaneously during Fast Forwarding, Rewinding.

Using Music Search

Returning to the beginning of selection A

Press the button ⑦ (**"MS"** ❾ appears) and then the high-speed tape transport button ③ for the direction opposite that is shown by the direction indicator ⓫. Playback will automatically start from the beginning of selection A.

Moving from selection A to selection B

Press the button ⑦ (**"MS"** ❾ appears) and then the high-speed tape transport button ③ that corresponds to the direction shown by the direction indicator ⓫. Playback will automatically start from the beginning of selection B.

To enable regular fast forward/rewind operations, press the button ⑦ again (**"MS"** ❾ turns off) to turn the function OFF.

The following errors will cause the music search function to operate improperly, even though the unit is not malfunctioning.

- Unrecorded "blank" portions between selections less than 4 seconds — the blank portion cannot be detected by the unit.
- Pauses in recorded conversations longer than 4 seconds — the unit reads these as blanks between selections.
- Portions recorded at very low volume for more than 4 seconds — the unit reads these as blanks between selections.

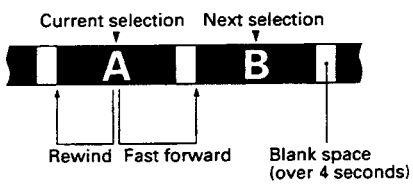

Dolby B NR

To hear a tape recorded using a Dolby NR system, press the button ⑥. ("DD" ❽ appears)

Tape Selector

When using metal tapes and chrome tapes, press button ⑤. (**"MTL"** ⓬ appears)

Using the Radio Intercept

(When the optional multi-play CD player is not connected)

Use the Radio Intercept function to hear radio while fast forwarding or rewinding.

1. Press button ④ (**"R.I"** and the frame at ⓪ turn on) before fast forwarding or rewinding to hear the radio.
2. To cancel the Radio Intercept function, press button ④ again.

- The Radio Intercept does not function when the Music Search function is in operation.

Using Radio/CD Intercept

(When the optional multi-play CD player is connected)

Connecting the optional multi-play CD player adds a CD Intercept function along with the Radio Intercept function.

Each press of button ④ causes the mode to change as follows: Radio Intercept (**"R.I"** and the frame at ⓪ turn on) — CD Intercept (**"CD.I"** and the frame at ⓪ turn on) — Normal (the frame at ⓪ turns off)

When the Radio Intercept mode is on, the radio will be audible during fast forwarding or rewinding. When the CD Intercept mode is on, disc play will be audible during fast forwarding or rewinding.

- Radio/CD Intercept does not function when the Music Search function is in operation.

8. PRECAUTIONS WHEN USING THE MULTI-PLAY CD CONTROL

- This model can be used as controller when an optionally available multi-play CD player (e.g., CDX-M40) is included in the system. Programmed play does not operate when used with the multi-play CD player CDX-M70 or CDX-M100.
- See page 12 for details on operation procedures.
- The Owner's Manual for the multi-play CD player does not contain an explanation of the CD controls for this unit. Read this Owner's Manual for details on proper operation and keep it handy for later reference.
- Immediately after the multi-play CD player is connected to the system, it may not operate properly (i.e. the system will not enter the multi-play CD player mode when you press the source selector button). In this case, press the clear button of the main unit and the clear button of the multi-play CD player, and attempt operation again.

The Magazine Type Multi-Play CD players with mark and the Magazines with the same mark are compatible for 5-inch (12 cm) discs.

9. PLAYING COMPACT DISC

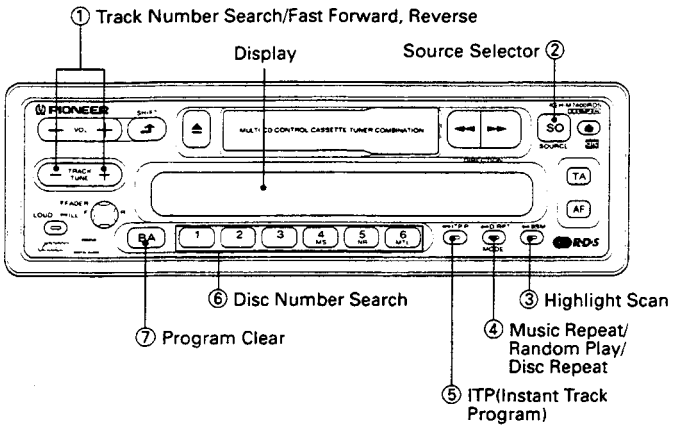

KEH-M7400RDS

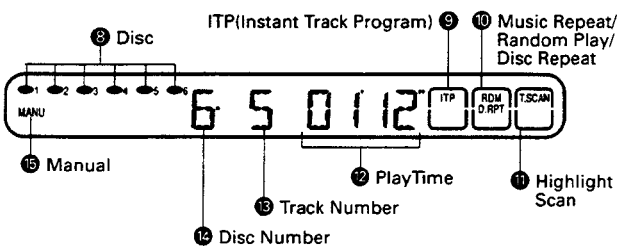

1 Press button ② to change the display to the Multi-Play CD Player mode and to begin disc play.
Disc number ⓮, track number ⓭ and play time ⓬ will light.
Each press of button ② changes the mode as follows:
Multi-Play CD Player — Tape — tuner — OFF

2 Use the Disc Number Search function to select a disc.
Select the desired disc by pressing one of the buttons in Bank ⑥. The number of the disc selected appears at position ⓮ on the display.
- Display ❽ indicates whether the magazine is loaded or empty.
- If the number at position ⓮ on the display does not change when you press a button in Bank ⑥, it means that there is no disc loaded in that tray.

3 Adjust volume and tone. (See page 4.)

4 To stop disc play, press button ②.
If you switch to the Multi-Play CD Player mode again, the normal play resumes from about where it stopped.
- If you stopped operating a Multi-Play CD Player CDX-M100 in the middle of music and then restarted, the player resumes playing from the very beginning of the selection with which you stopped.

Note:
- After you press a Button in Bank ⑥, it may take some time before play begins due to the time necessary to load and set the disc in the mechanism .
- The display counts down the number of seconds between tracks if the spacing is rather large (–02, –01).

Error Mode

Should an abnormality occur — for example, Multi-Play CD Player cannot be operated, or the music stops during CD playback — the main unit will indicate an error mode.

ERROR- 10

While it the unit is in error mode, a number will be displayed indicating the cause of the error, so please check the items listed below. If you cannot fix the problem after checking the cause of the error, please contact your dealer or your nearest Pioneer service center.

Note:
When using the Multi-Play CD Player, CDX-M100, CDX-M70, CDX-M50 and CDX-M40, an error will be displayed only in the form of "ERROR-00", without the number which indicated the cause of the error. When this display appears, please check items 11, 12, or 30 listed below.

Display	Cause	Treatment
10	The CD player is not set for CD performance mode.	Contact your dealer or your nearest service station.
11	Dirt or a scratch on the disc stops the laser beam from being able to focus. The disc has been inserted upside down.	Wipe off the dirt. Exchange the disc if it has been scratched. Confirm that the disc has been inserted right side up.
12	Discs (such as CD-ROM) other than audio discs are used.	Please set the disc for audio.
30	Dirt or a scratch on the disc hinders the track number search function.	Wipe the dirt off the disc. Exchange the disc if it is scratched.
A0	CD player power fault.	Contact your dealer or your nearest Pioneer service station.

HEAT indicator

To prevent deterioration in the semi-conductor laser from overheating, playback of a CD will stop when the temperature surrounding the Multi-Play CD Player rise during play.
When this occurs, **"HEAT"** will be indicated on the display. Please wait until the temperature drops.
- This function refers to the Multi-Play CD Player CDX-M100. It does not refer to other Multi-Play CD Players.

8. BLOCK DIAGRAM

- KEH-6000RDS

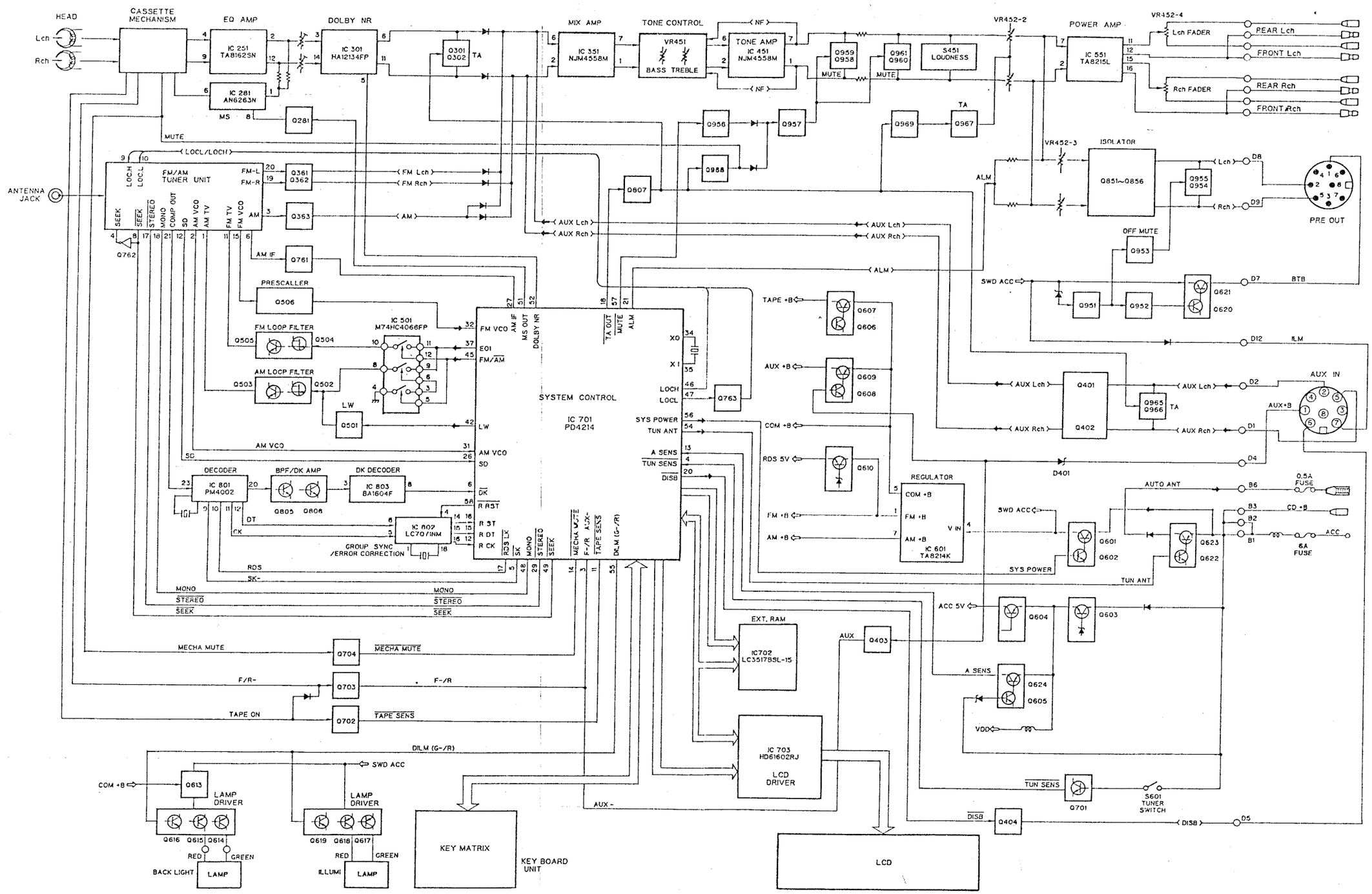

Fig. 8

DOLBY NR ADJUSTMENT

No.	Cassette Tape	Adjusting Point	Adjustment Method (Switch Position)
1	NCT-150 (400Hz, 200nwb/m)	VR301 (Lch) VR302 (Rch)	mV Meter (2) : -7.2dBs ± 1dB (337mV) (DOLBY NR Switch:OFF) (METAL Switch:OFF)

MW/LW ADJUSTMENT

	No.	AM SSG (400Hz, 30%)		Displayed Frequency (kHz)	Adjusting Point	Adjustment Method (Switch Position)
		Frequency (kHz)	Level (dB μV)			
Tuning Volt	1	(MW MODE)		1,602	—	Verify that DC V Meter (1) is less than 6.5V.
	2	(LW MODE)		153	—	Verify that DC V Meter (1) is more than 2.0V.
IF	1	999	20 — 25	999	T204, 205, 206	mV Meter (1) : Maximum

FM ADJUSTMENT ※ Stereo MOD. : 1kHz, L+R=90%, Pilot=10%

	No.	FM SSG (400Hz, 100%)		Displayed Frequency (MHz)	Adjusting Point	Adjustment Method (Switch Position)
		Frequency (MHz)	Level (dB μV)			
IF	1	98.1	60	98.1	T51	Center Meter:0
	2	98.1	60	98.1	T52	Distortion Meter:Minimum
	3	Repeat No. 1-2 alternately so that the center meter indicates the 0 output and distortion meter indicates minimum output.				
Front End	1			108.0	L5	DC V Meter (2) : 6.2 ± 0.2V
	2			87.5	—	Verify that DC V Meter (2) is more than 2.1 ± 0.6V
	3	98.1	8	98.1	T1	Distortion Meter:Minimum
Soft Mute	1	98.1	60	98.1	—	mV Meter (1) : A dB
	2	98.1	10	98.1	VR102	mV Meter (1) : A-3dB
ARC	1	98.1※	35	98.1	VR101	mV Meter (1) : Separation 5dB
SD	1	98.1	17	98.1	VR51	DC V Meter (3) : Approx. 5V
	2	98.1	16	98.1	—	Verify that DC V Meter (3) is approx. 0V.
	3	98.1	55	98.1	VR1	DC V Meter (3) : Approx. 5V
	4	98.1	54	98.1	—	Verify that DC V Meter (3) is approx. 0V.
SL	1	106.1	30	106.1	VR761	DC V Meter (4) : 1.2 ± 0.05V

RDS/SDK ADJUSTMENT

	No.	FM SSG (400Hz, 100%)		Displayed Frequency (MHz)	Adjusting Point	Adjustment Method (Switch Position)
		Frequency (MHz)	Level (dB μV)			
57k BPF	1	98.1		98.1	VR801	mV Meter (3) : Maximum
DK PLL	1	—	—	—	VR802	Frequency Counter: 125 ± 1Hz

12. ADJUSTMENT

12.1 TEST MODE

Test mode is mainly used in adjustment of CD multi-players.

●Switching to test mode

While pressing the 6,AF keys together, switch the back-up and the ACC on.

●Canceling test mode

While pressing the CD multi-player clear button, switch the this unit back-up and ACC OFF.

●Key functions during test mode

The CD multi-player, deck, and tuner are selected by the SOURCE button.

a)CD multi-player

key	Function
BAND / CLEAR	Regulator ON / OFF
TRACK +	FWD kick
TRACK -	REV kick
SCAN	Tracking close
RPT / RDM	Tracking open
ITP	Focus close

b)Deck and tuner

No corresponding function. Normal operation executed.

•Flow Chart

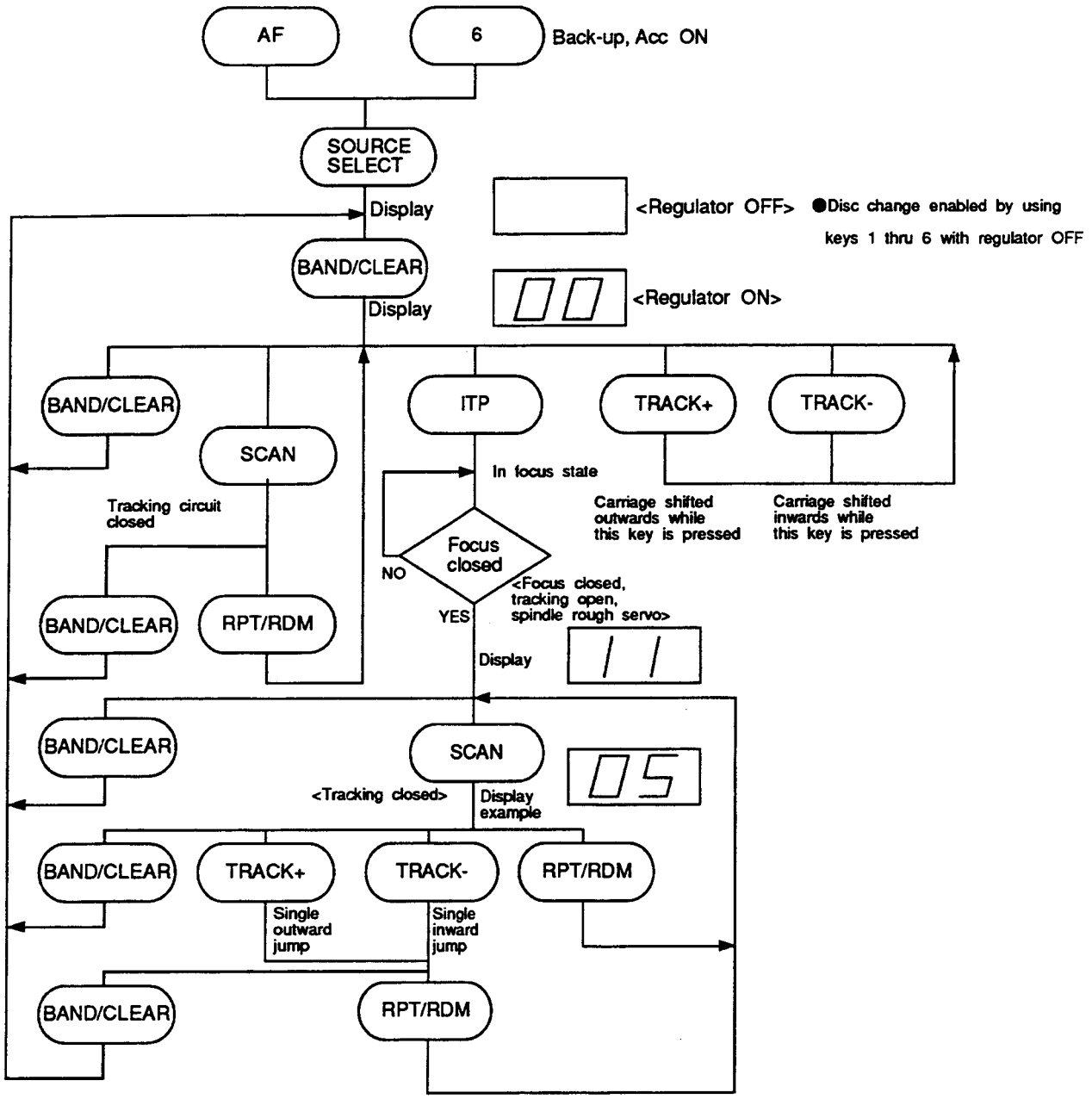

Fig. 8

12.2 TUNER ADJUSTMENT

●Connection Diagram

NOTICE:
Select C1 so that total capacity of 80pF is attained from the direction of the receiver jack.
Z: Output impedance of SSG.

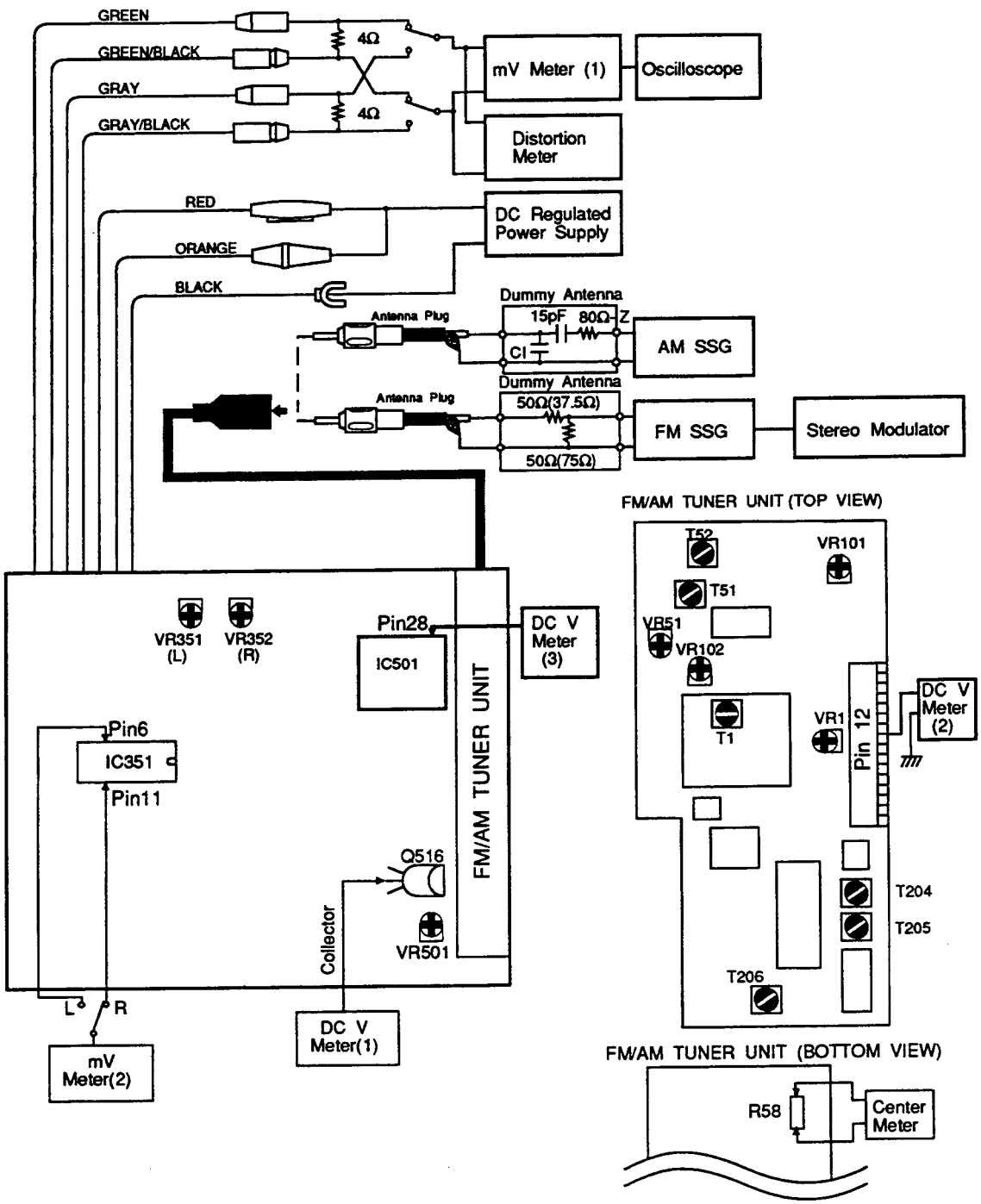

Fig. 9

FM ADJUSTMENT ※ Stereo MOD.: 1kHz,L =90% ,Pil =10%

	No	FM SSG(400Hz,100%)		Displayed	Adjusting	Adjustment Method
		Frequency(MHz)	Level(dB μ V)	Frequency (MHz)	Point	(Switch Position)
IF	1	98.1	60	98.1	T51	Center Meter:0
	2	98.1	60	98.1	T52	Distortion Meter:Minimum
	3	Repeat No.1-2 alternately so that the center meter indicates the 0 output and distortion meter indicates minimum output.				
Fro-nt End	1			87.9 *(87.5)		Verify that DC V Meter(1) is more than 2.1±0.6V
	2	98.1	8	98.1	T1	Oscilloscope:Optimum Symmetry
	3	98.1※	60	98.1	T1	Distortion Meter:Minimum Rotate T1 less than ±90
Soft Mute	1	98.1	60	98.1		mV Meter(1):A dB
	2	98.1	9	98.1	VR102	mV Meter(1):A-3dB
ARC	1	98.1※	34	98.1	VR101	mV Meter(1):Separation 5dB
SD	1	98.1	15	98.1	VR51	DC V Meter(2):Approx. 5V
	2	98.1	14	98.1		Verify that DC V Meter (2) is approx. 0V.
	3	98.1	55	98.1	VR1	DC V Meter(2):Approx. 5V
		Connect collector of Q2 to GND. Connect DC regulated power supply to pin 3 of FM Front End through resistor(330Ω). Add 4.3v from DC regulated power supply.				
	4	98.1	54	98.1		Verify that DC V Meter (2) is approx. 0V.

MW/LW ADJUSTMENT

	No	AM SSG(400Hz,30%)		Displayed Frequency (kHz)	Adjusting Point	Adjustment Method (Switch Position)
		Frequency(kHz)	Level(dB μ V)			
Tuning Volt	1	(MW MODE)		1,602	———	Verify that DC V Meter (1) is less than 6.5V.
	2	(LW MODE)		153	———	Verify that DC V Meter (1) is more than 2.0V.
IF	1	999	15	999	T204,205, 206	mV Meter(1):Maximum

DOLBY NR ADJUSTMENT

No	Cassette Tape	Adjusting Point	Adjustment Method (Switch Position)
1	NCT-150(400Hz,200nwb/m)	VR351(Lch)VR352(Rch)	mV Meter(2):-8.2dBs±1dB (DOLBY NR Switch:OFF)

RDS ADJUSTMENT

	No	FM SSG(400Hz,100%)		Displayed Frequency (MHz)	Adjusting Point	Adjustment Method (Switch Position)
		Frequency(MHz)	Level(dBf)			
NF SW	1	106.1	30	106.1	VR501	DC V Meter(3): 1.2±0.05V

•ICs

IC51: PA4012B

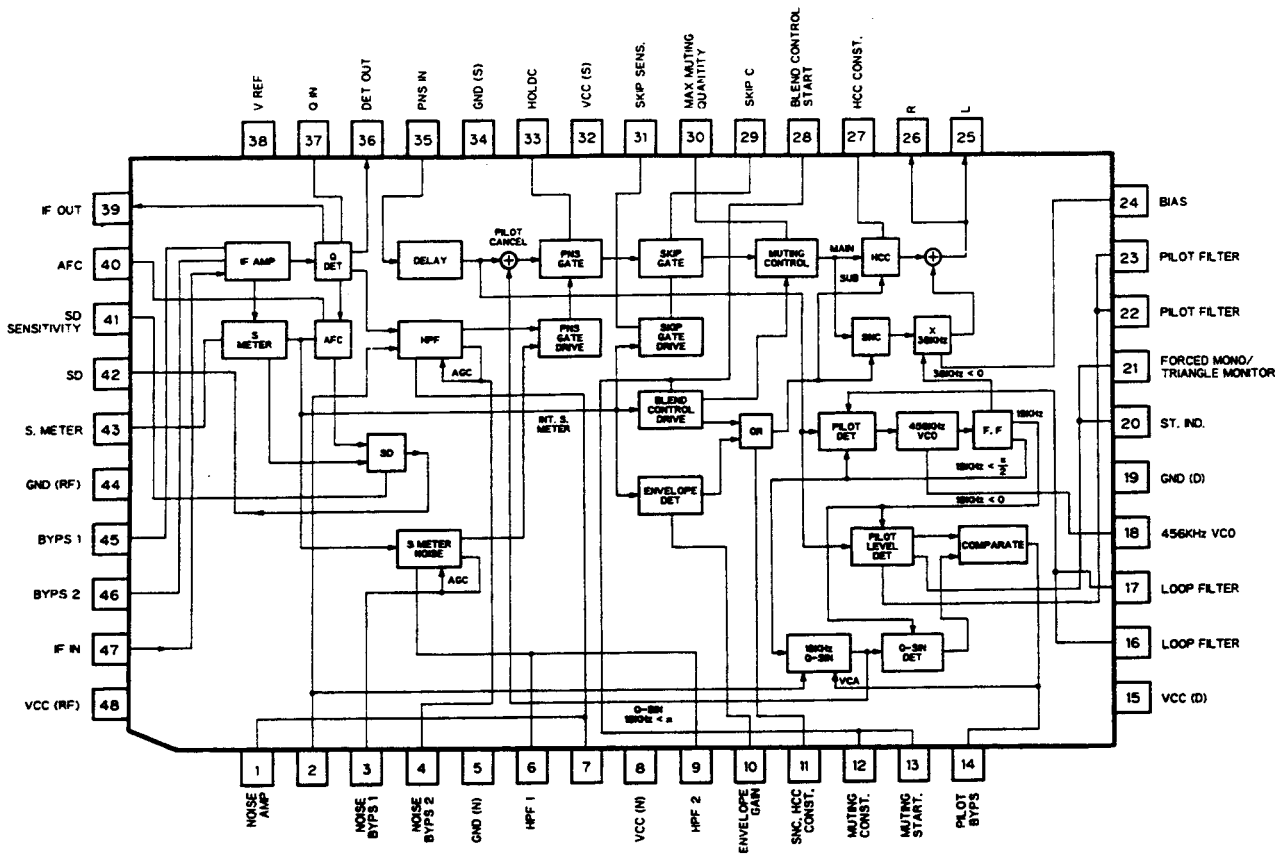

IC201: PA4017

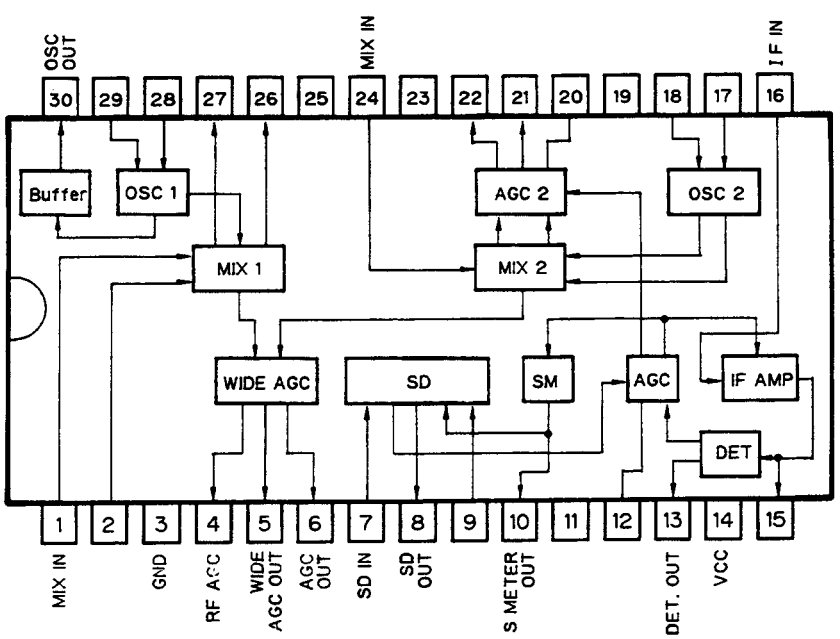

IC351: HA12134AF

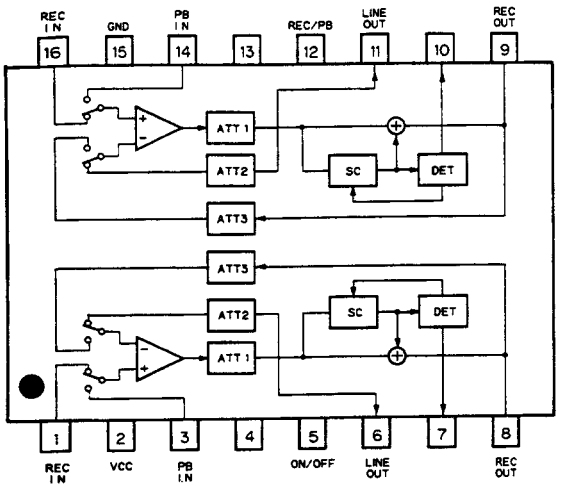

IC352: AN6263N

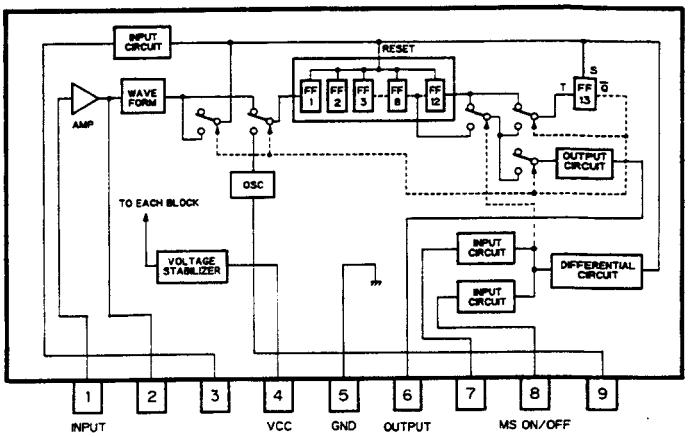

IC401, 402, 409, 410: RC4558

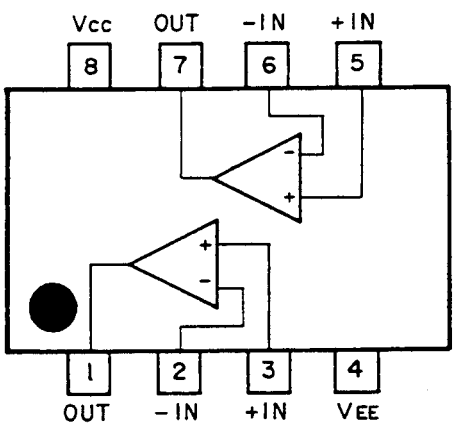

IC601: NC13309T3

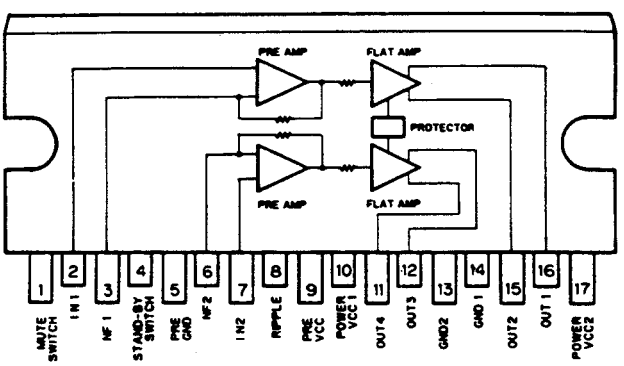

IC802: LH5116HN

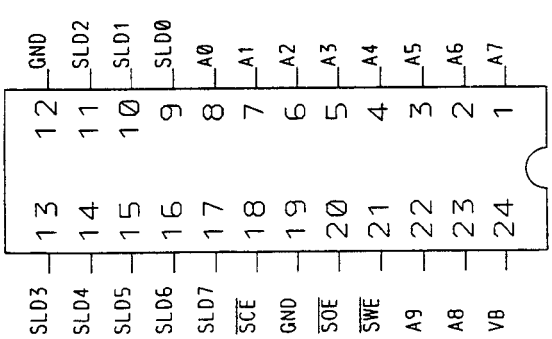

IC801: CWV1020

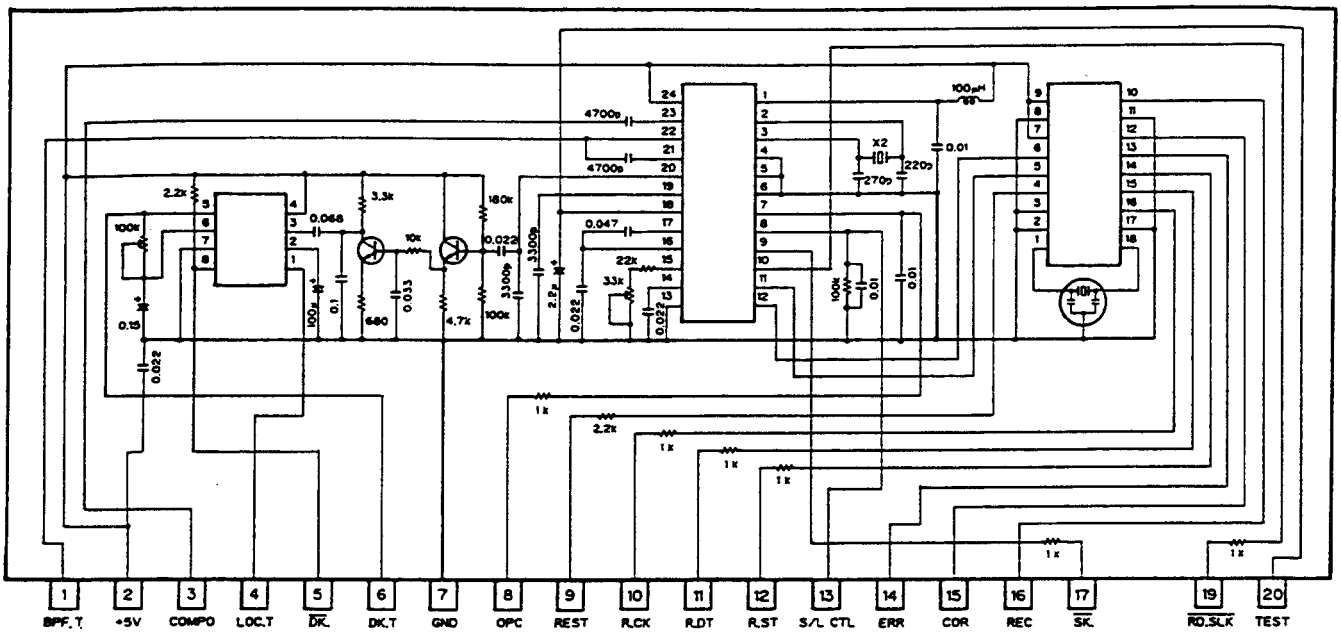

IC902: S-80734AN-DY

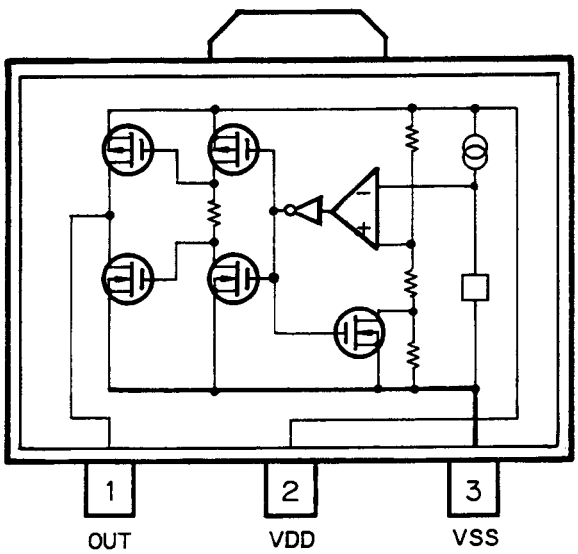

IC903: TA8214K

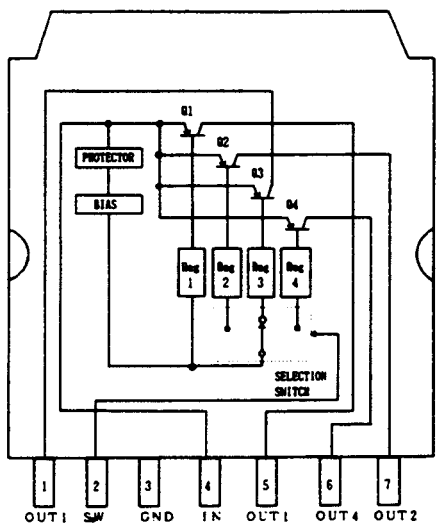

IC251: MB3106M

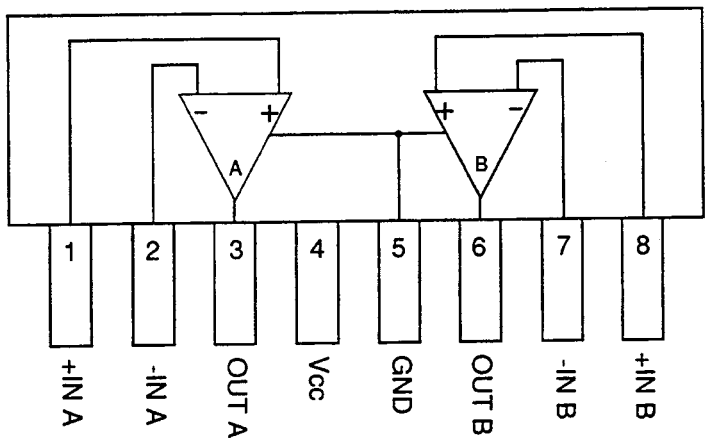

IC408: TC9233F

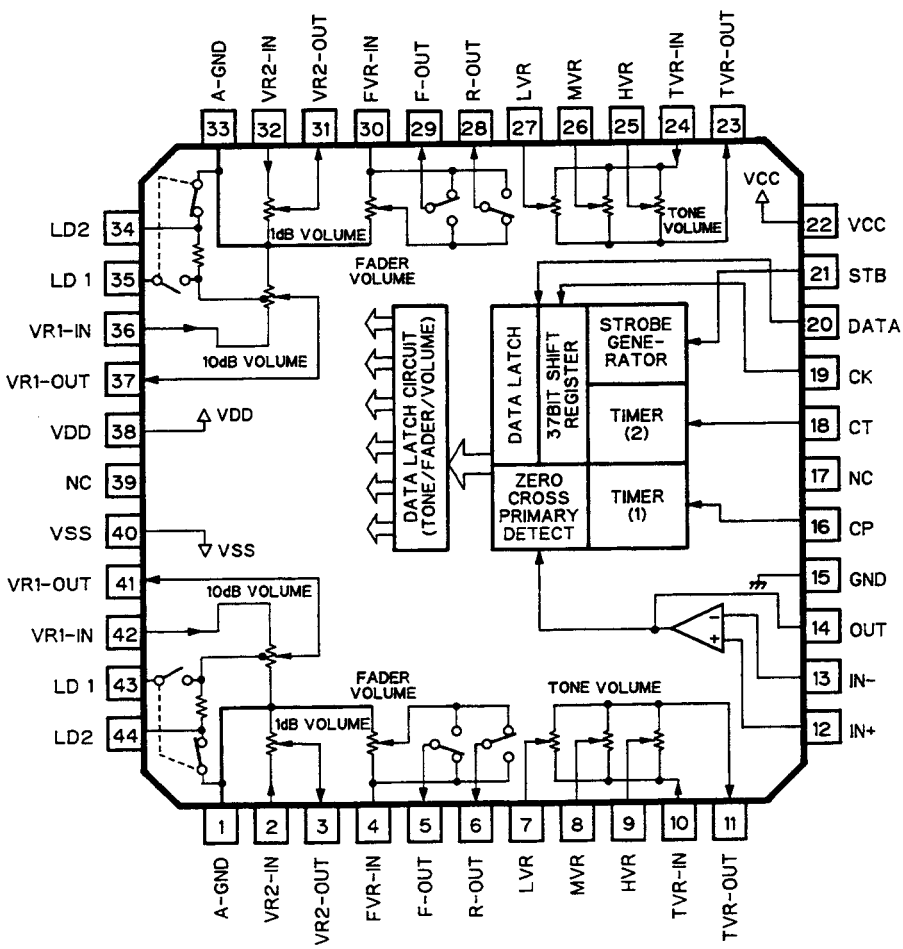

IC403, 404, 405, 406, 407: M5238FP

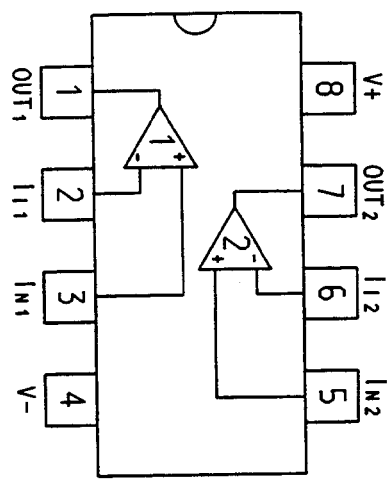

IC501: *SC17010GF-523

*IC's marked by * are MOS type.*
Be careful in handling them because they are very liable to be damaged by electrostatic induction.

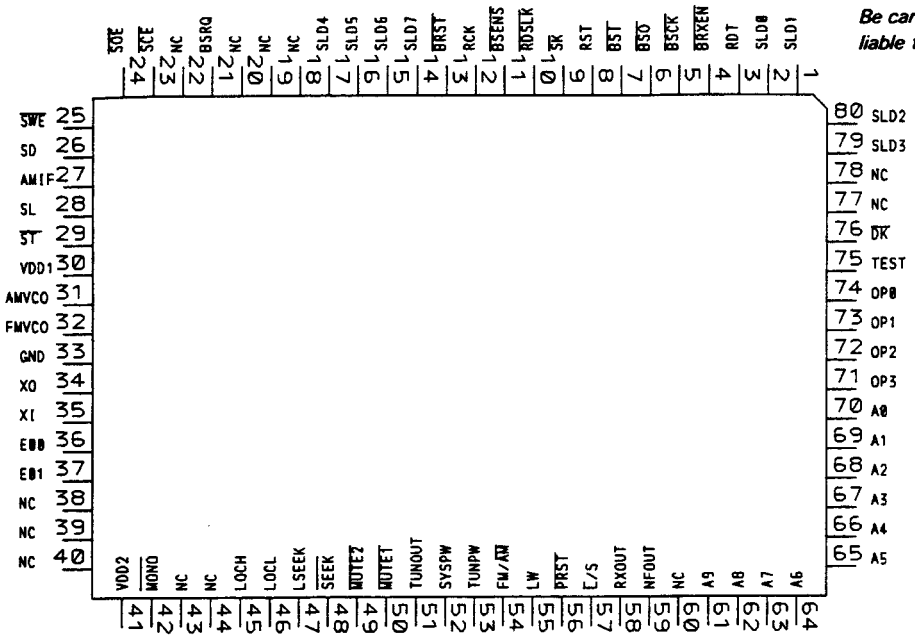

Output Format	Meaning
C	C-MOS
N	N channel open drain
RDS	With pull down resistor

•Pin Functions (SC17010GF-523)

Pin	Pin name	I/O	Output Format	Function
1 2	SLD1 SLD0	input/ output	 C	SRAM data input/output
3	RDT	input	N	Error correction data input
4	$\overline{BRXEN}$	input/ output	 N	Bus busy input/output
5	$\overline{BSCK}$	input		Serial clock input
6	$\overline{BSO}$	output	C	Serial data output
7	$\overline{BSI}$	input		Serial data input
8	RST	input		Data start input
9	$\overline{SK}$	input		SK signal input
10	$\overline{RDSLK}$	input		RDS signal lock input
11	$\overline{BSENS}$	input		Back up power sense input
12	RCK	input		Data clock input
13	$\overline{BRST}$	input		Bus reset input
14 | 17	SLD7 | SLD4	input/ output	 C	SRAM data input/output
18 | 20	NC		N	Not used
21	BSRQ	output	C	Bus communication service request output
22	NC		C	Not used

Pin	Pin name	I/O	Output Format	Function
23	$\overline{SCE}$	output	C	SRAM chip enable output
24	$\overline{SOE}$	output	C	SRAM output enable
25	$\overline{SWE}$	output	C	SRAM read/write output
26	SD	input		SD signal input
27	AMIF	input		AM IF input
28	SL	input		Signal level input
29	$\overline{ST}$	input		Stereo broadcast detecation signal input pin
30	VDD1			Device power supply terminal
31	AMVCO	input		AM signal input
32	FMVCO	input		FM signal input
33	GND			GND
34	XO	output	C	Crystal oscillating element connection pin
35	X1	input		
36	EOO	output	C	Not used
37	EO1	output	C	PLL error output
38 39 40	NC			Not used
41	VDD2			Device power supply terminal
42	$\overline{MONO}$	output	C	Forced mono output pin
43 44	NC			Not used
45	LOCH	output	C	Local H setup output pin
46	LOCL	output	C	Local L setup output pin
47	LSEEK	output	C	Outputs high signal during local SEEK operation
48	$\overline{SEEK}$	output	C	Outputs low signal during SEEK operation
49	$\overline{MUTE2}$	output	C	Mute output when tuner/CD multi switcing
50	$\overline{MUTE1}$	output	C	Tuner mute output
51	TUNOUT	output	C	Tuner/CD multi audio signal switching contrl pin
52	SYSPW	output	C	System power supply control pin "H":Tuner,"L":CD multi
53	TUNPW	output	C	Tuner power supply control output pin
54	FM/$\overline{AM}$	output	C	FM/AM power select output pin "H":FM,"L":AM
55	LW	output	C	Loop filter switching output pin "H":LW
56	$\overline{PRST}$	output	C	RDS data reset output
57	$\overline{L}$/S	output	C	RDS decoder time constant selest output pin
58	RXOUT	output	C	RX output pin
59	NFOUT	output	C	NF outputpin
60	NC			Not used
61 | 70	A9 | AO	output	C	SRAM address output
71 | 74	OP3 | OPO	output	C	Not used
75	TEST	input	RDW	Test mode input
76	$\overline{DK}$	input	RDW	DK signal input
77 78	NC	input	RDS	Not used
79 80	SLD3 SLD2	input/ output	C	SRAM data input/output

IC901: *PD4347A

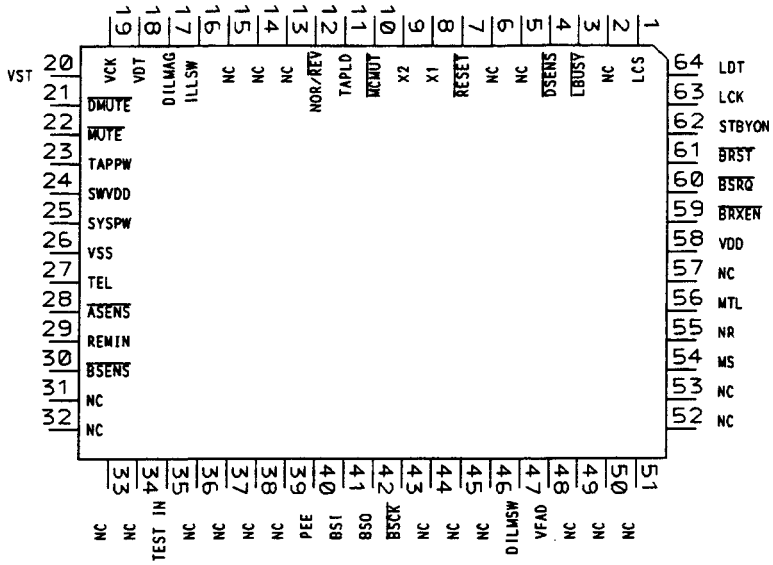

•Pin Functions (PD4347A)

Pin	Pin name	I/O	Output Format	Function
1	LCS	output	C	LCD Chip select
2	NC	output	C	
3	$\overline{\text{LBUSY}}$	input	C	LCD BUSY input
4	$\overline{\text{DSENS}}$	input	C	FRONT panel EJECT/REPL ACE sensor input
5 6	NC	input	C	
7	$\overline{\text{RESET}}$	input		Reset input
8 9	X2 X1			Crystal oscillating element connection pin
10	$\overline{\text{MCMUT}}$	input	C	Mechanism mute request
11	TAPLD	input	C	Cassette loading input
12	NOR/$\overline{\text{REV}}$	input	C	Deck FWD/REV sensor input
13 | 15	NC	output	C	
16	ILLSW	output	C	Illiumination power output
17	DILMAG	output	C	Illumination green/amber selector output
18	VDT	output	C	E-VOL date
19	VCK	output	C	E-VOL clock
20	VST	output	C	E=VOL strobe
21	$\overline{\text{DMUTE}}$	output	C	Deck mute output
22	$\overline{\text{MUTE}}$	output	C	Mute output

Pin	Pin name	I/O	Output Format	Function
23	TAPPW	output	C	Deck power supply control
24	SWVDD	output	C	Power control for key control IC
25	SYSPW	output	C	System power supply control
26	VSS			GND
27	TEL	input	C	TEL Mute input
28	$\overline{\text{ASENS}}$	input	C	ACC sence input
29	REMIN	input	C	Key dete input
30	$\overline{\text{BSENS}}$	input	C	BACK UP sense
31 | 34	NC	input	C	
35	TEST IN	input	C	Test program
36	NC	input	C	
37 | 39	NC	output	C	
40	PEE	output	C	Beep tone output
41	BSI	input	C	Bus serial date input
42	BSO	output	C	Bus serial date output
43	$\overline{\text{BSCK}}$	in/out	C	Bus serial clock input/output
44	NC	input	C	
45 46	NC	input	N	
47	DILMSW	input	N	Dial illumination sellectorinput
48	VFAD	input	N	Fader(E-VOL) selector input
49 | 53	NC	output	N	
54	MS	output	N	Music signal output
55	NR	output	N	Dolby NR ON/OFF output
56	MTL	output	N	DECK METAL output
57	NC			
58	VDD			Power supply
59	$\overline{\text{BRXEN}}$	in/out	C	Bus reception enable
60	$\overline{\text{BSRQ}}$	input	C	Bus service request
61	$\overline{\text{BRST}}$	output	C	Bus reset
62	STBYON	output	C	Amp stand by output
63	LCK	output	C	LCD driver clock output
64	LDT	output	C	LCD driver dete output

Output Format	Meaning
C	C-MOS
N	N channel open drain

IC101: *SC17106GC-513

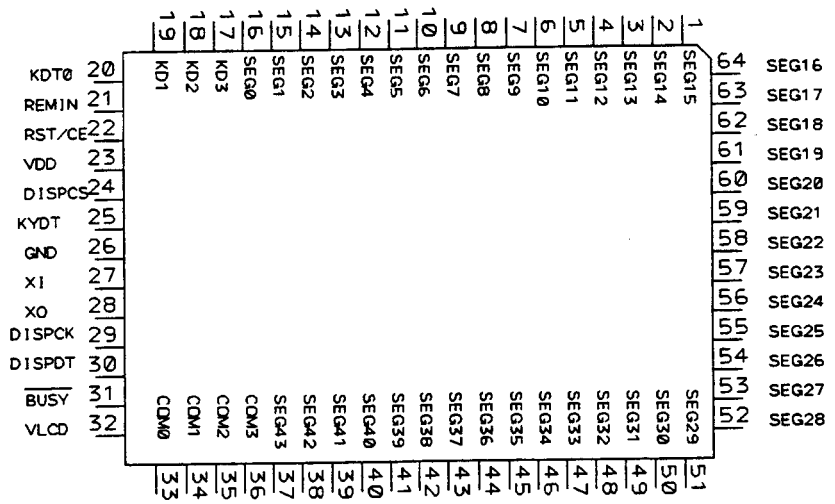

• Pin Functions (SC17106GC-513)

Pin	Pin name	I/O	Function
1 I 16	SEG15 I SEG0	Output	Output terminals for LCD segment.
17 I 20	KD3 I KD0	Input	Input ports for key scan return signals.
21	REMIN	In/Out	Data input terminal for remote control data input.
22	RST/CE		Input terminal for signal selection on device.
23	VDD		Power supply terminal on device.
24	DISPCS	Input	Input ports for data transmission outside microcomputers.
25	KYDT	Output	Data output terminal for external key data output.
26	GND		Grand terminal for device.
27 28	XI XO		Clock oscillating terminal.

Pin	Pin name	I/O	Function
29	DISPCK	Input	Shift clock input terminal for serial interface.
30	DISPDT	Input	Data input terminal for serial interface.
31	$\overline{\text{BUSY}}$		Starting display data output prohibited.
32	VLCD		Power supply terminal for LCD display.
33 ~ 36	COM0 ~ COM3	Output	Common terminal for LCD display.
37 ~ 44	SEG43 ~ SEG35		Output terminal for LCD segment.
45 ~ 64	SEG35 ~ SEG16	Output	Output terminals for LCD segment.

•FM FRONT END (CWB1035)

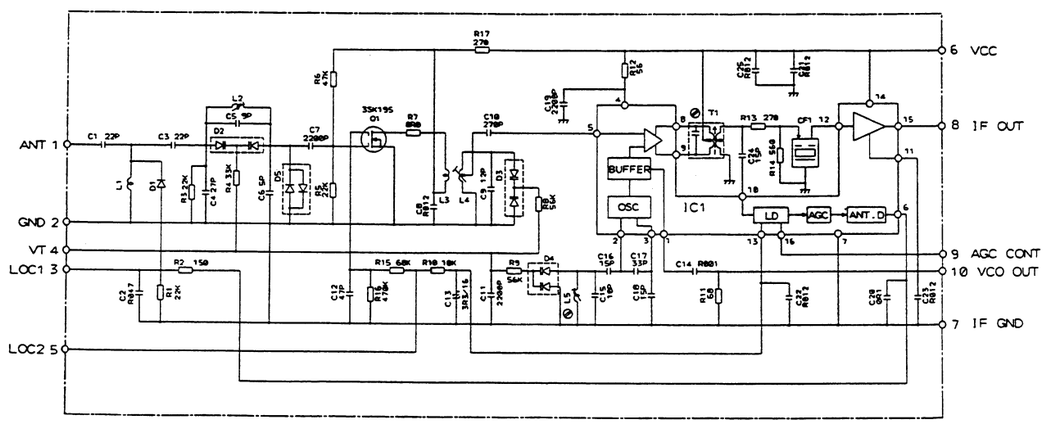

NOTE:

⇨ Symbol indicates a resistor.
No differentiation is made between chip resistors and discrete resistors.

⊣⊢ Symbol indicates a capacitor.
No differentiation is made between chip capacitors and discrete capacitors.

Decimal points for resistor and capacitor fixed values are expressed as:
2.2→2R2
0.022→R022

•LCD (CAW1151)

COMMON

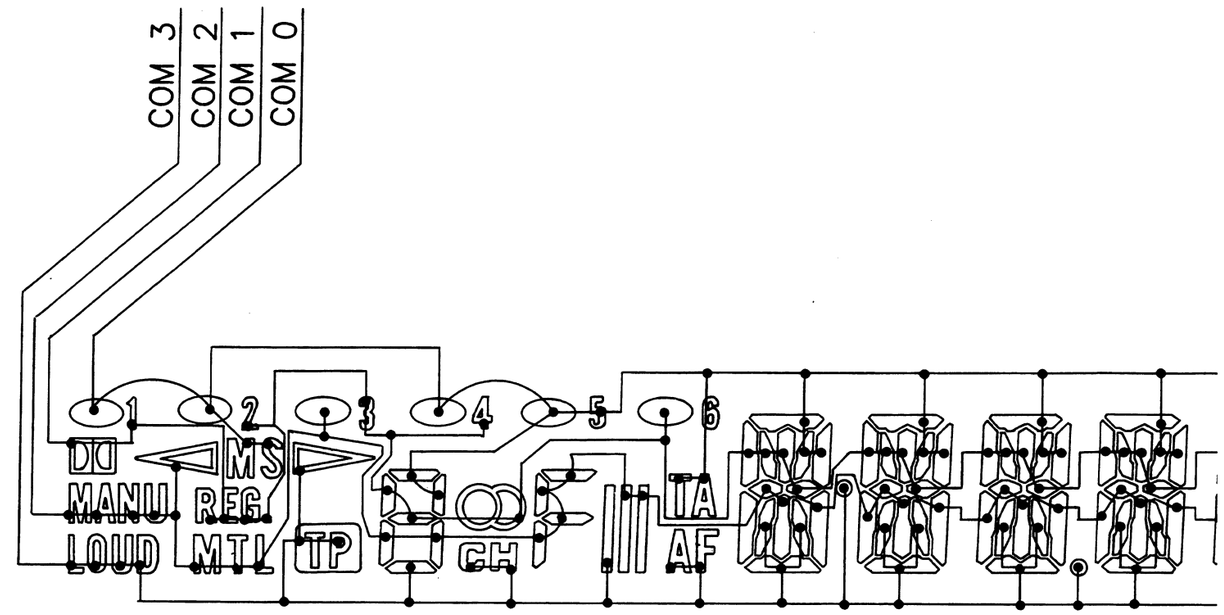

SEGMENT

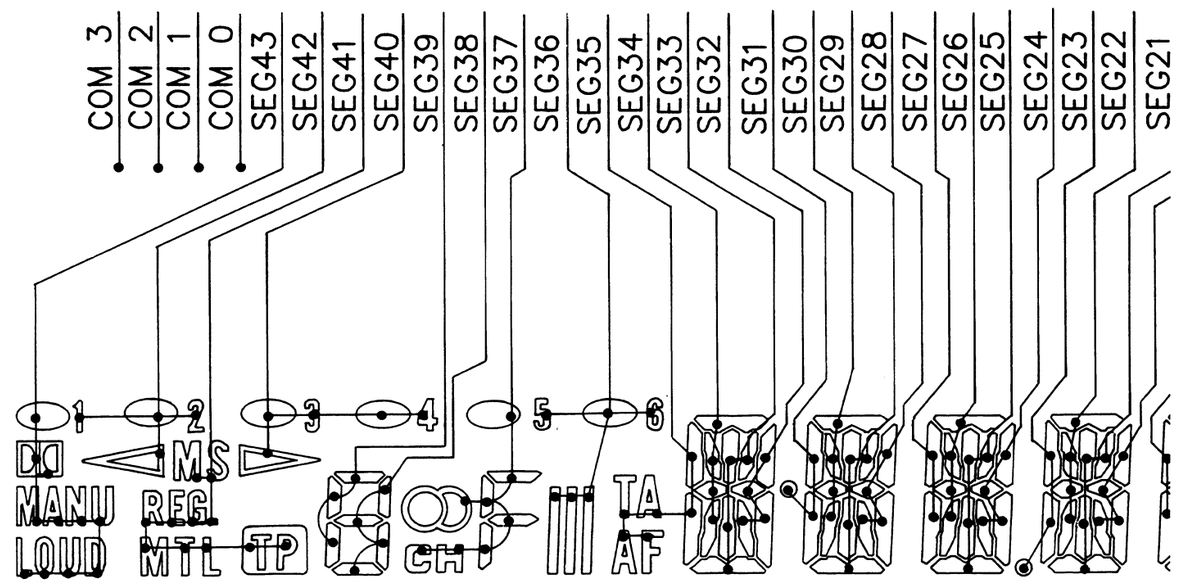

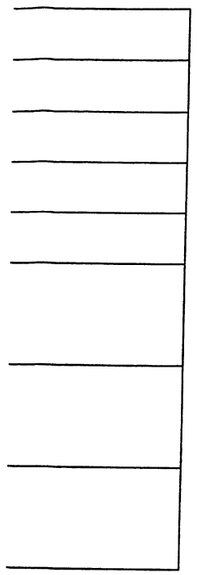

•LCD (CAW1151)

COMMON

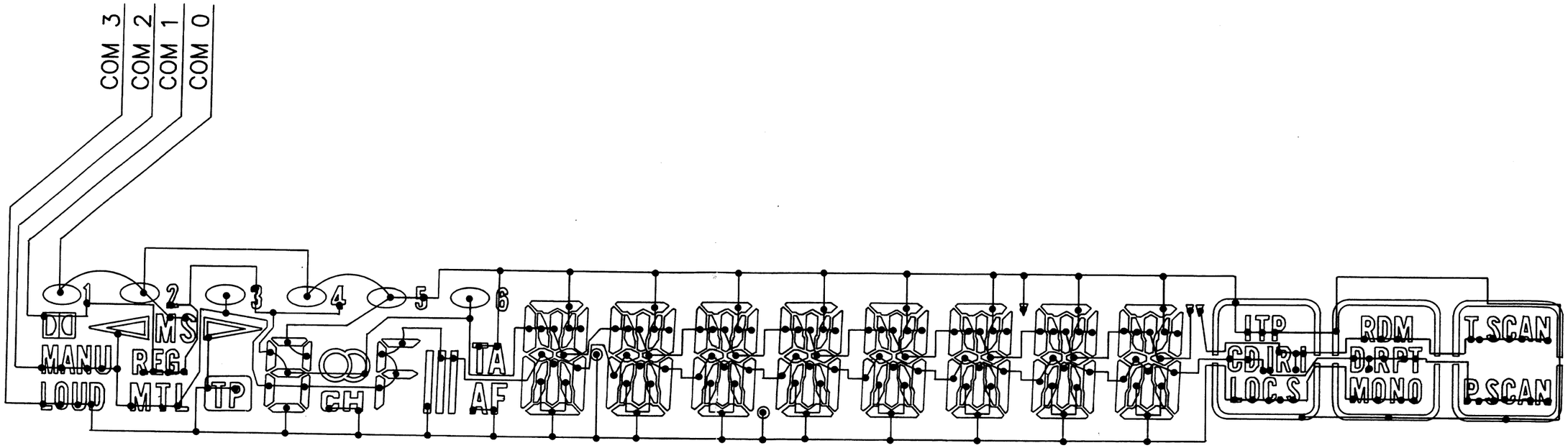

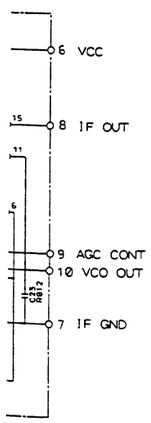

SEGMENT

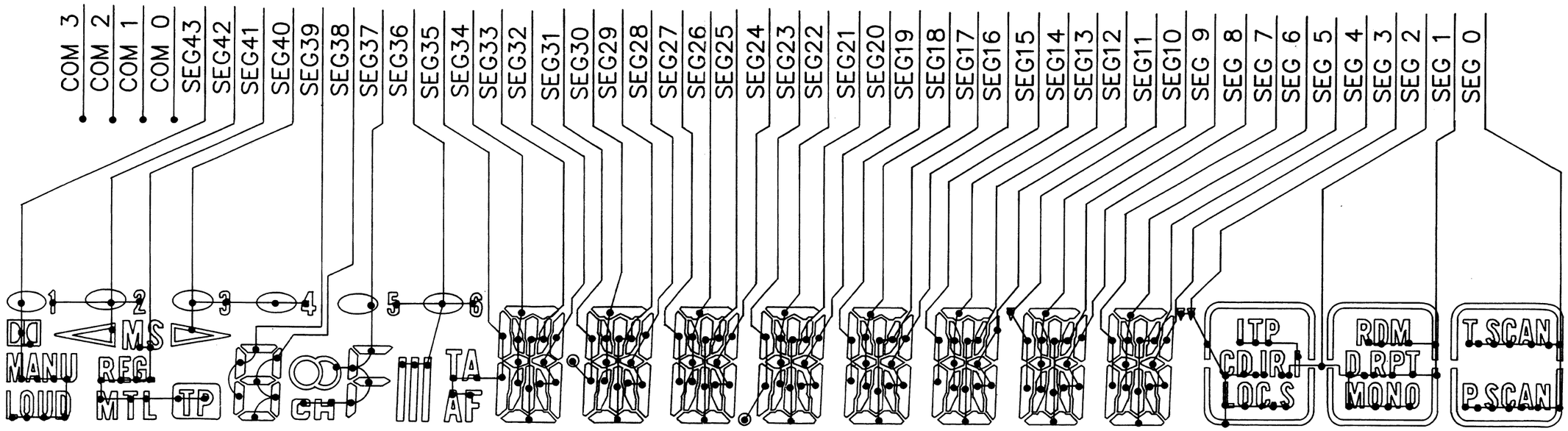

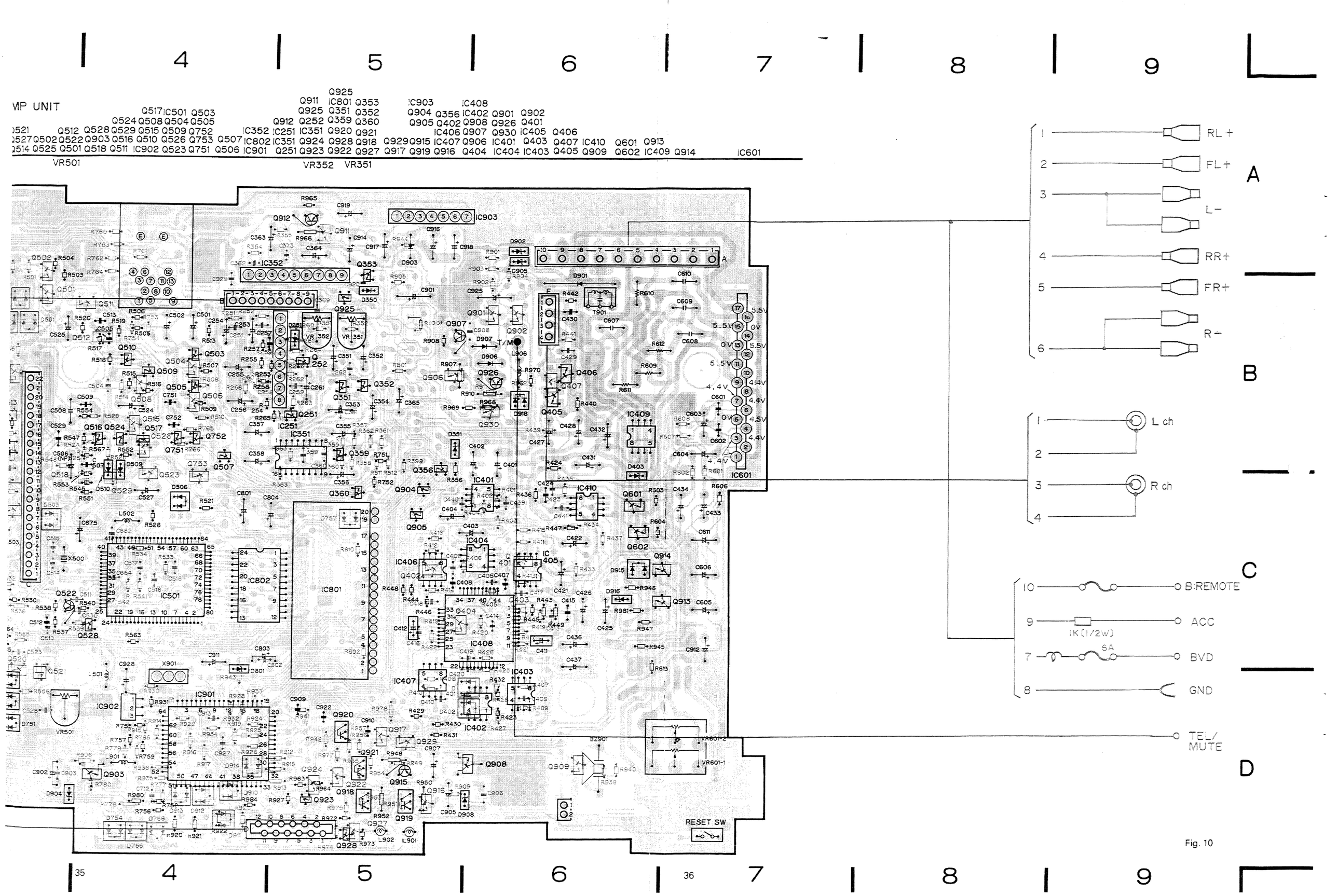
4
5
6
7
8
9
MP UNIT
VR501
VR352
VR351
IC601
RL +
FL +
L −
RR +
FR +
R −
A
B
L ch
R ch
C
B:REMOTE
ACC
1K(1/2W)
5A
BVD
GND
D
TEL/
MUTE
RESET SW
35
36

Fig. 10

13. CONNECTION DIAGRAM (KEH-M7400RDS/EW)

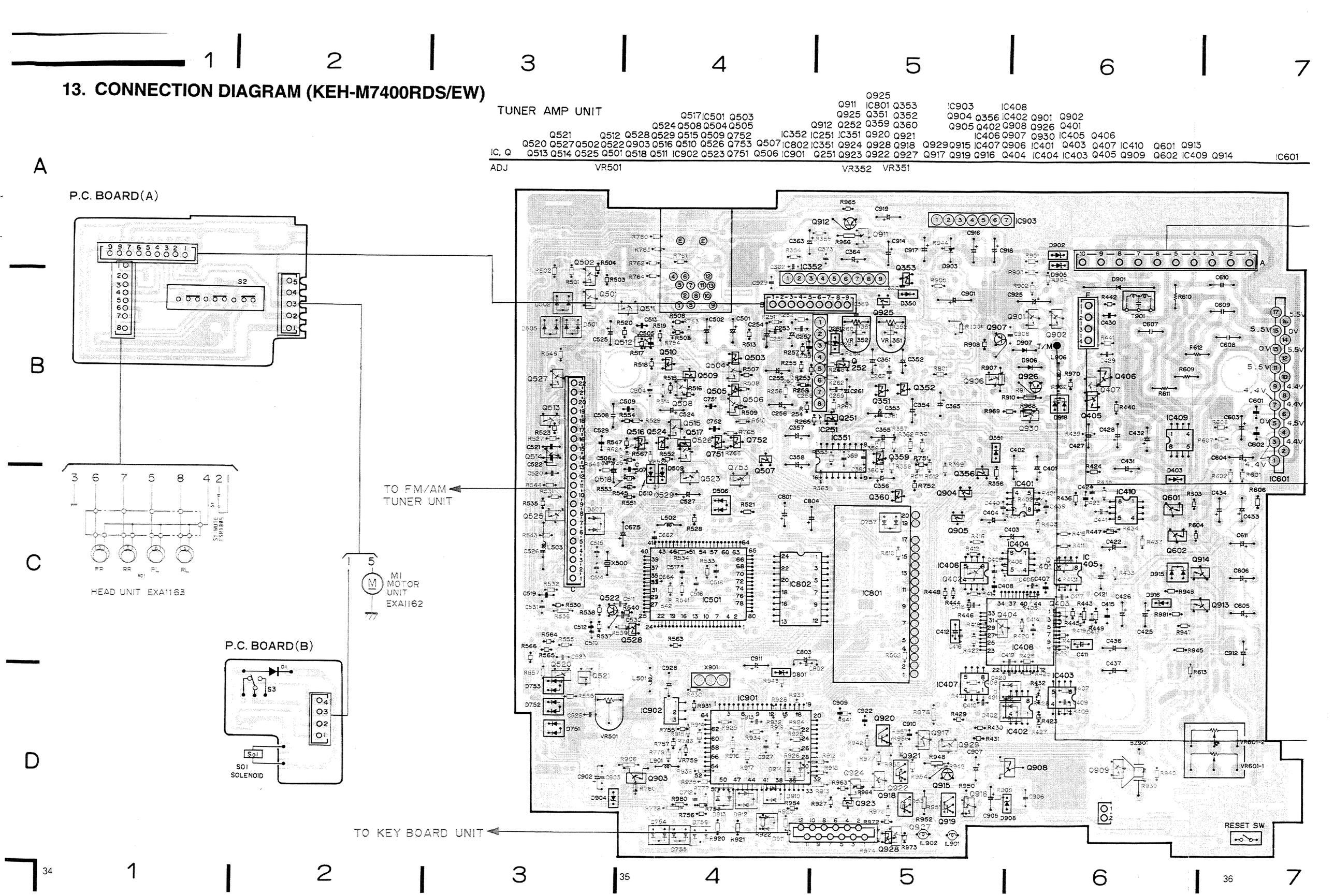

14. SCHEMATIC CIRCUIT DIAGRAM (KEH-M7400RDS/EW)

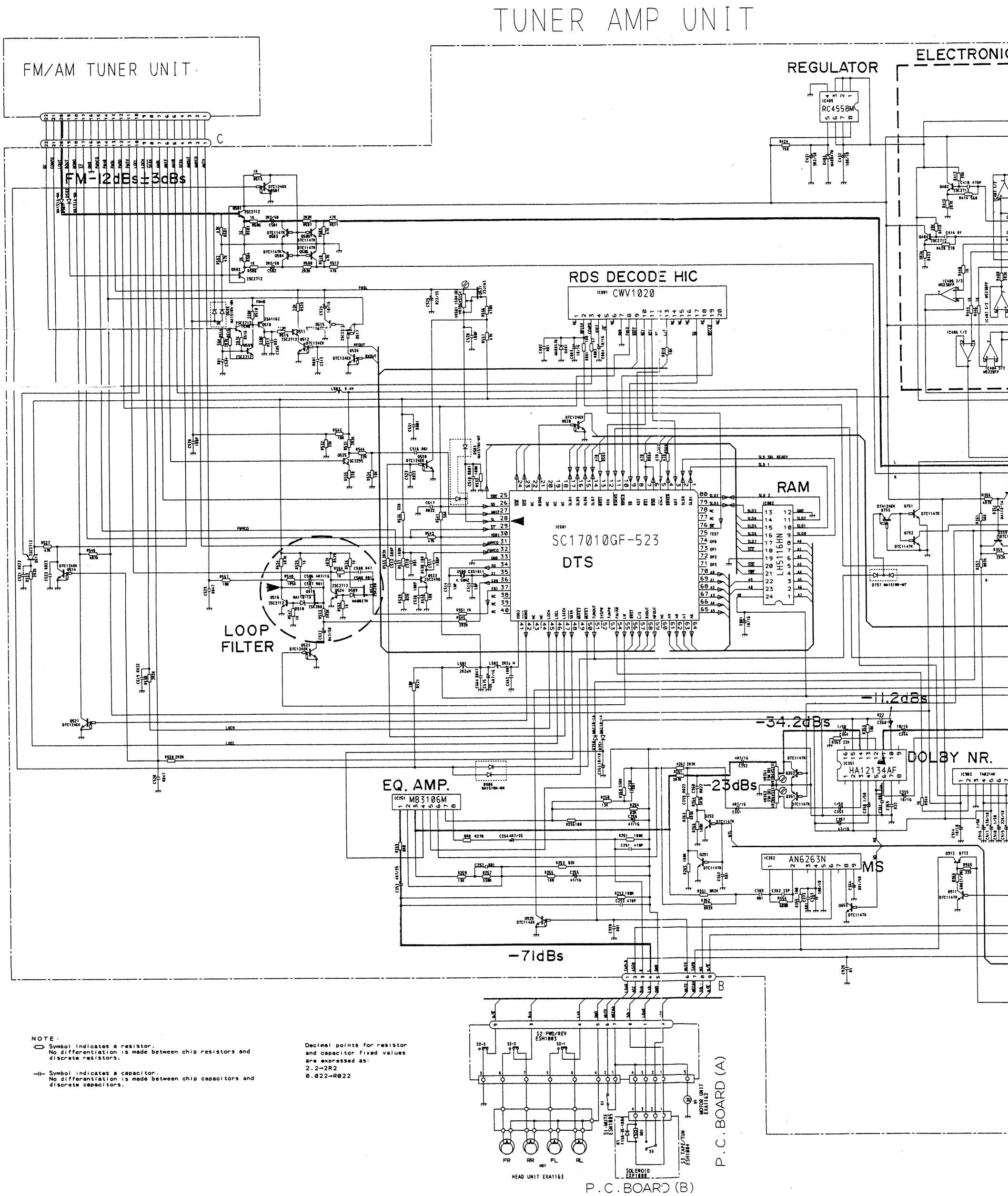

NOTE:

Symbol indicates a resistor.
No differentiation is made between chip resistors and discrete resistors.

Symbol indicates a capacitor.
No differentiation is made between chip capacitors and discrete capacitors.

Decimal points for resistor and capacitor fixed values are expressed as:
2.2→2R2
0.022→R022

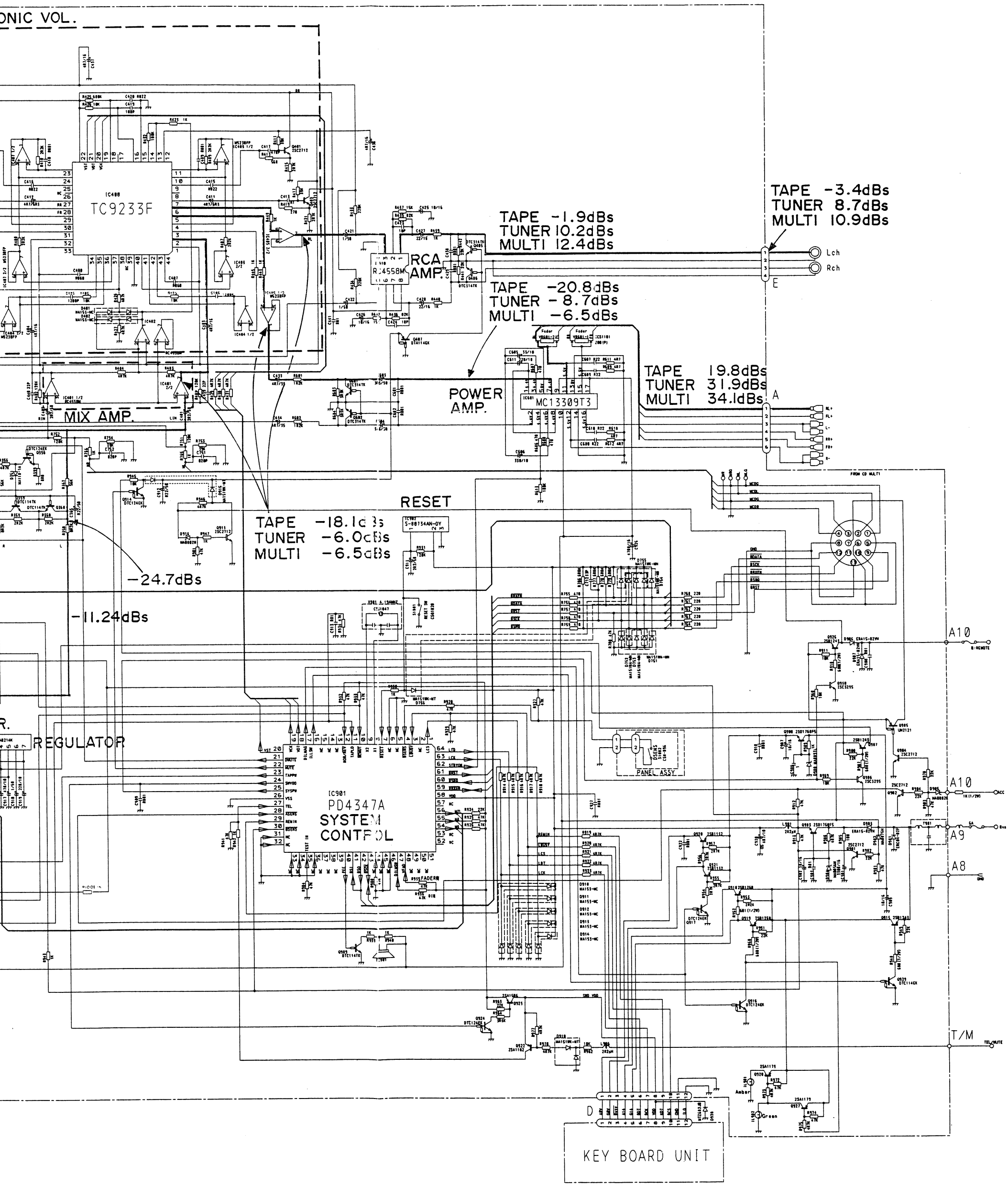
ONIC VOL.
IC400
TC9233F
TAPE -1.9dBs
TUNER 10.2dBs
MULTI 12.4dBs
TAPE -3.4dBs
TUNER 8.7dBs
MULTI 10.9dBs
RCA AMP.
Lch
Rch
TAPE -20.8dBs
TUNER -8.7dBs
MULTI -6.5dBs
TAPE 19.8dBs
TUNER 31.9dBs
MULTI 34.1dBs
POWER AMP.
IC601
MC13309T3
MIX AMP.
RESET
TAPE -18.1dBs
TUNER -6.0dBs
MULTI -6.5dBs
-24.7dBs
-11.24dBs
REGULATOR
IC901
PD4347A
SYSTEM CONTROL
PANEL ASSY
A10
A9
A8
T/M
KEY BOARD UNIT

Fig. 11

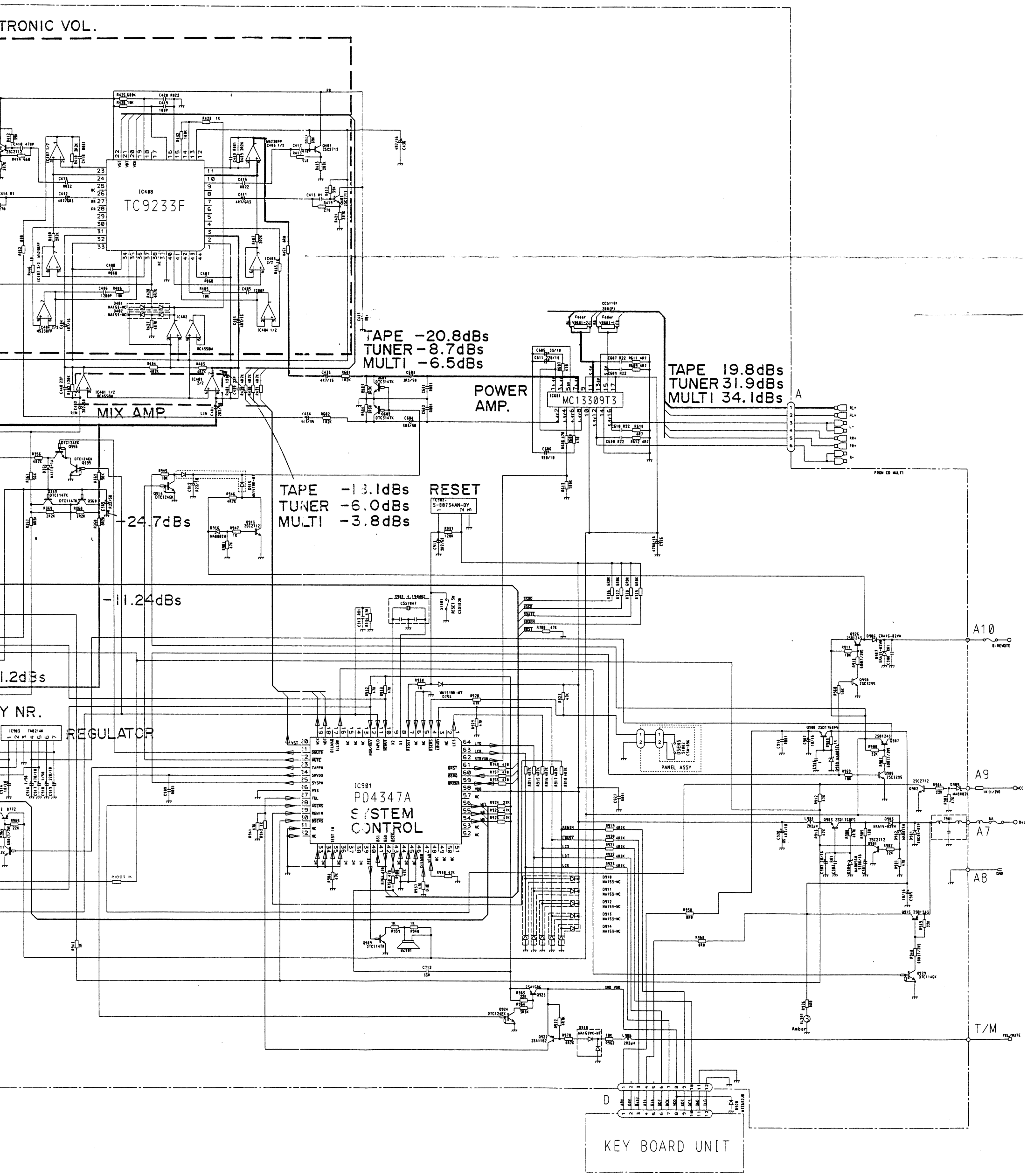
TRONIC VOL.
IC408
TC9233F
TAPE -20.8dBs
TUNER -8.7dBs
MULTI -6.5dBs
MIX AMP.
POWER AMP.
IC601
MC13309T3
TAPE 19.8dBs
TUNER 31.9dBs
MULTI 34.1dBs
A
FROM CD MULTI
TAPE -13.1dBs
TUNER -6.0dBs
MULTI -3.8dBs
RESET
IC907
S-80734AN-DY
-24.7dBs
-11.24dBs
1.2dBs
Y NR.
REGULATOR
IC903
TA8214K
IC901
PD4347A
SYSTEM CONTROL
PANEL ASSY
A10
B:REMOTE
A9
A7
A8
T/M
D
KEY BOARD UNIT

Fig. 12

15. SCHEMATIC CIRCUIT DIAGRAM

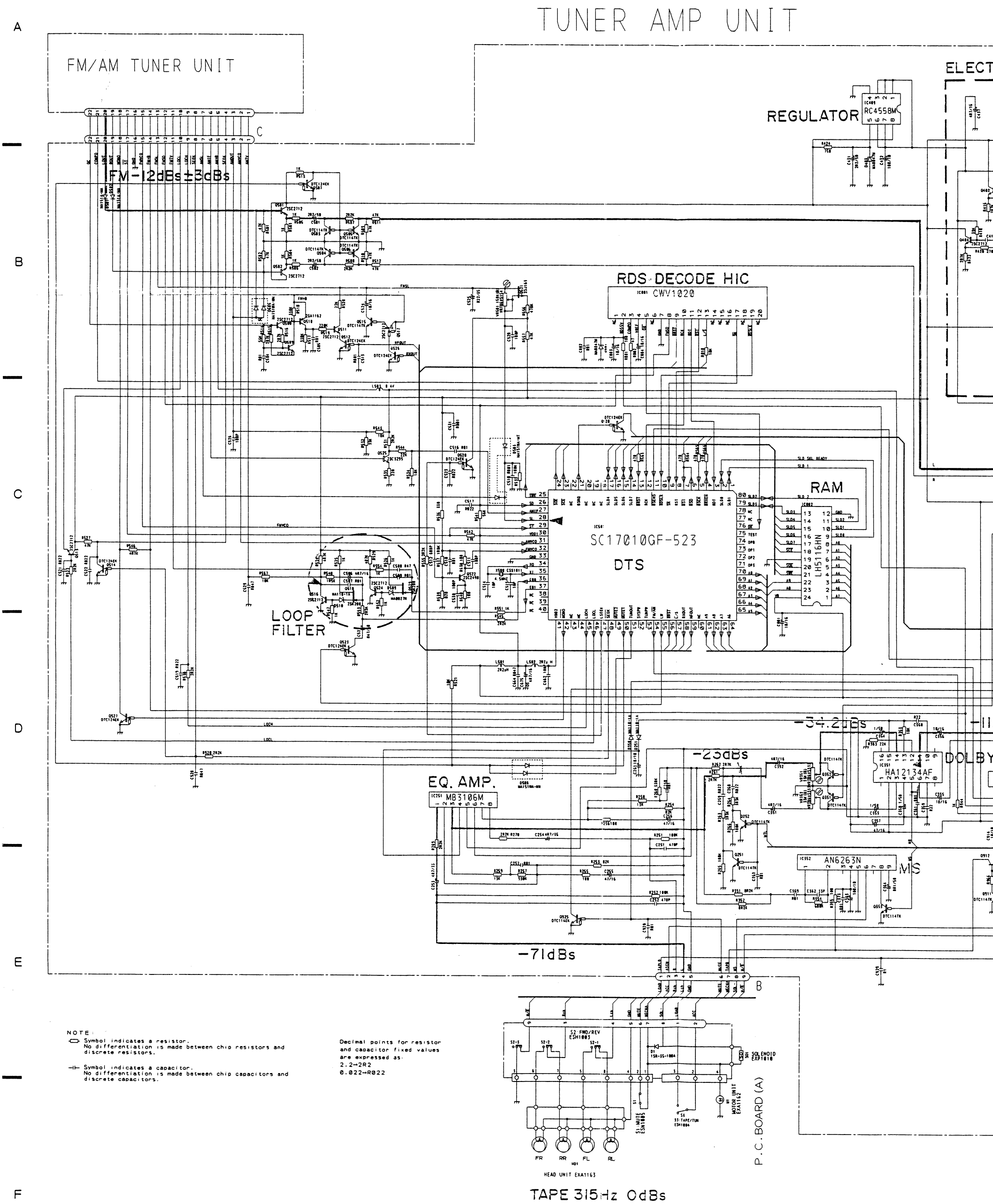

NOTE:

Symbol indicates a resistor.
No differentiation is made between chip resistors and discrete resistors.

Symbol indicates a capacitor.
No differentiation is made between chip capacitors and discrete capacitors.

Decimal points for resistor and capacitor fixed values are expressed as:
2.2→2R2
0.022→R022

16. CONNECTION DIAGRAM (KEH-5400RDS/EW)

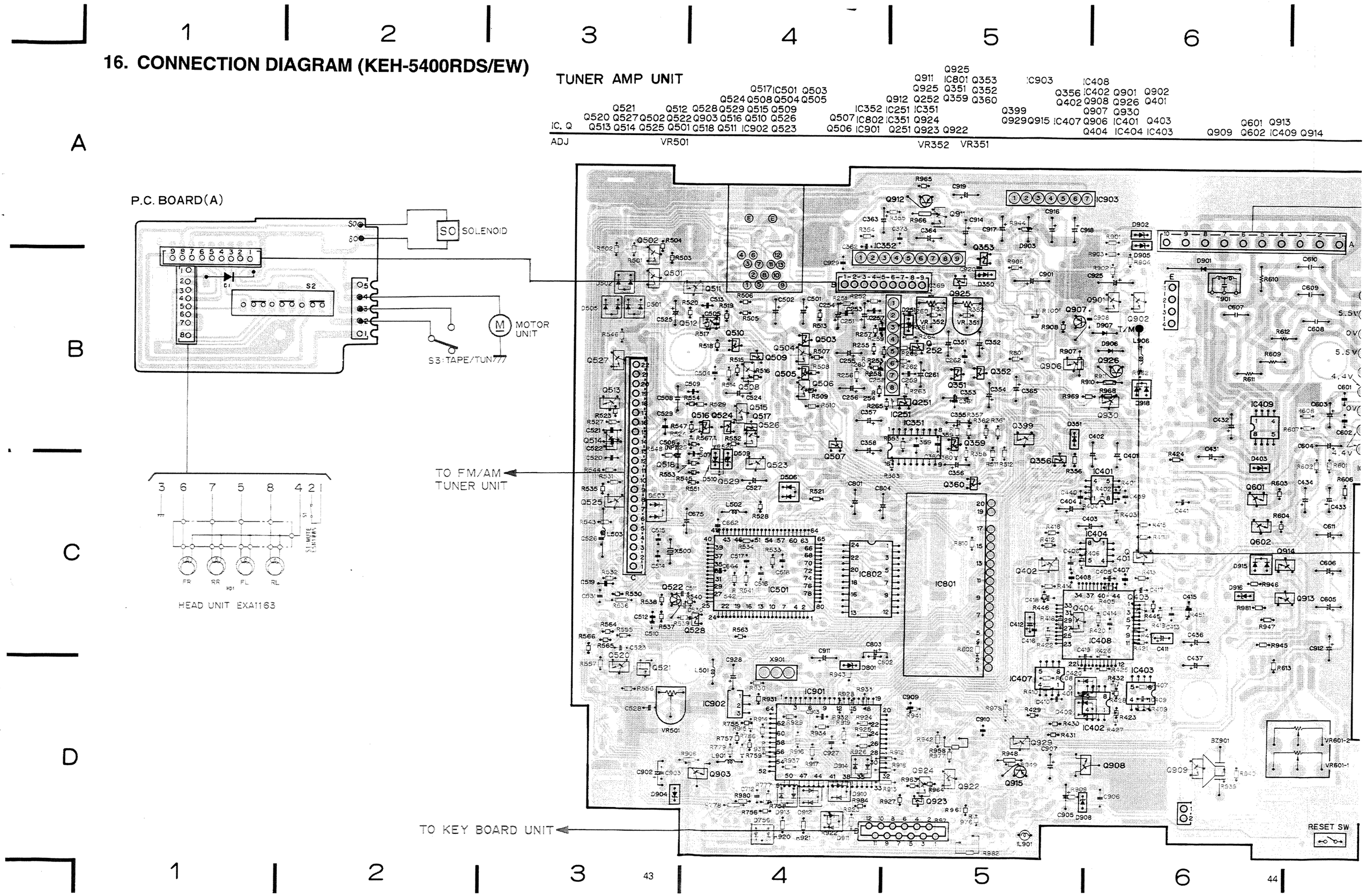

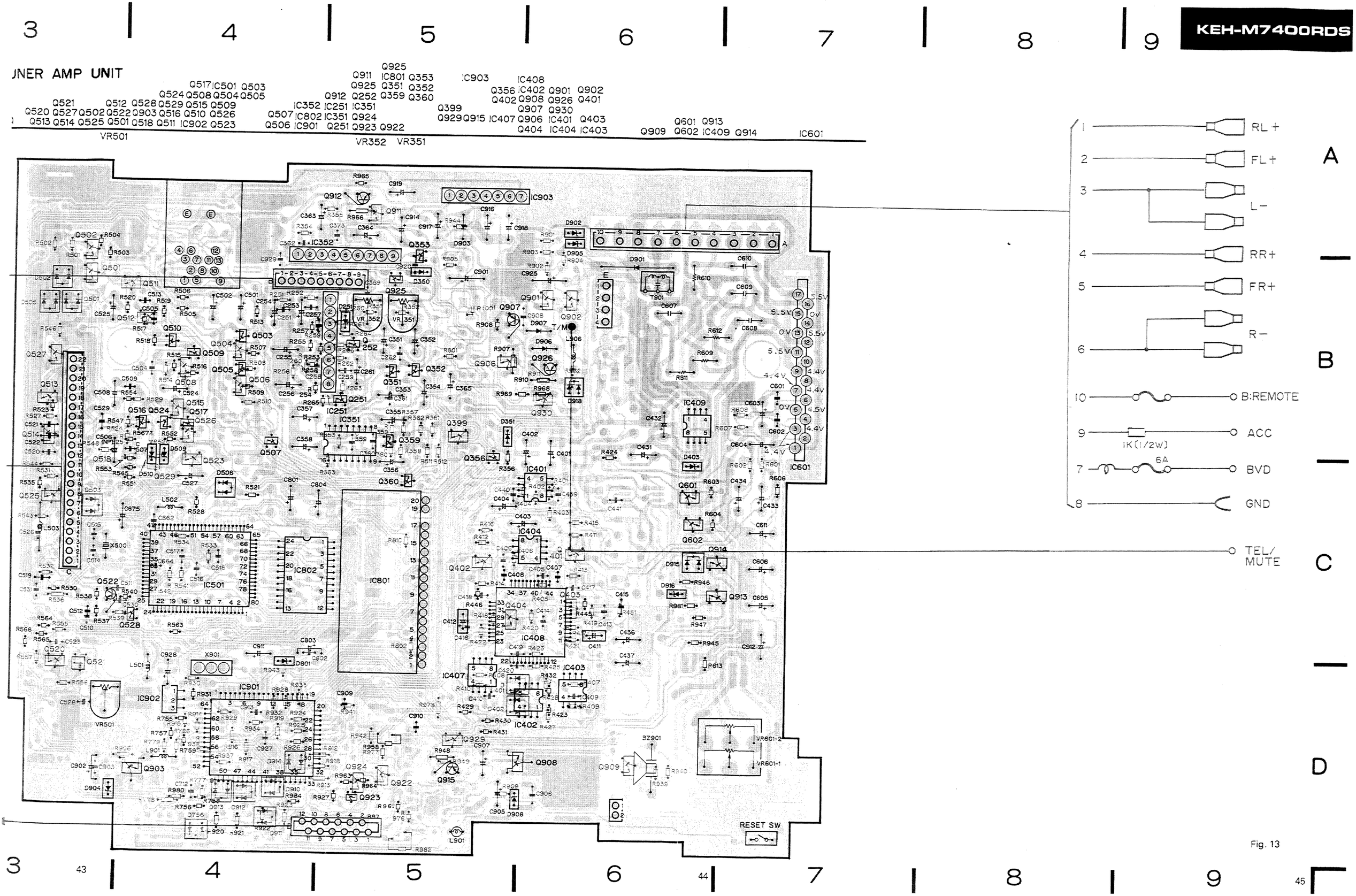
3
4
5
6
7
8
9
UNER AMP UNIT
VR501
VR352
VR351
IC903
IC352
IC501
IC802
IC801
IC251
IC351
IC401
IC404
IC408
IC403
IC407
IC402
IC409
IC601
IC901
IC902
Q903
Q908
Q909
Q913
Q914
Q915
Q922
Q923
Q924
Q929
Q930
Q601
Q602
Q603
Q604
Q926
Q906
Q907
Q902
Q901
Q925
Q912
Q911
Q353
Q351
Q352
Q359
Q360
Q399
Q356
Q402
Q403
Q401
Q251
Q252
Q253
Q501
Q502
Q503
Q504
Q505
Q506
Q507
Q508
Q509
Q510
Q511
Q512
Q513
Q514
Q515
Q516
Q517
Q518
Q520
Q521
Q522
Q523
Q524
Q525
Q526
Q527
Q528
Q529
X901
X500
L502
L503
L901
L906
T901
D901
D902
D903
D905
D906
D907
D918
D350
D351
D403
D506
D801
D904
D908
D912
D913
D914
D915
D916
D402
D503
D501
D502
D505
D509
D510
D756
BZ901
VR601-2
VR601-1
RESET SW
ILS01
TEL/
MUTE
RL +
FL +
L −
RR+
FR+
R −
B:REMOTE
ACC
BVD
GND
1K(1/2W)
6A
A
B
C
D

Fig. 13

17. CONNECTION DIAGRAM (

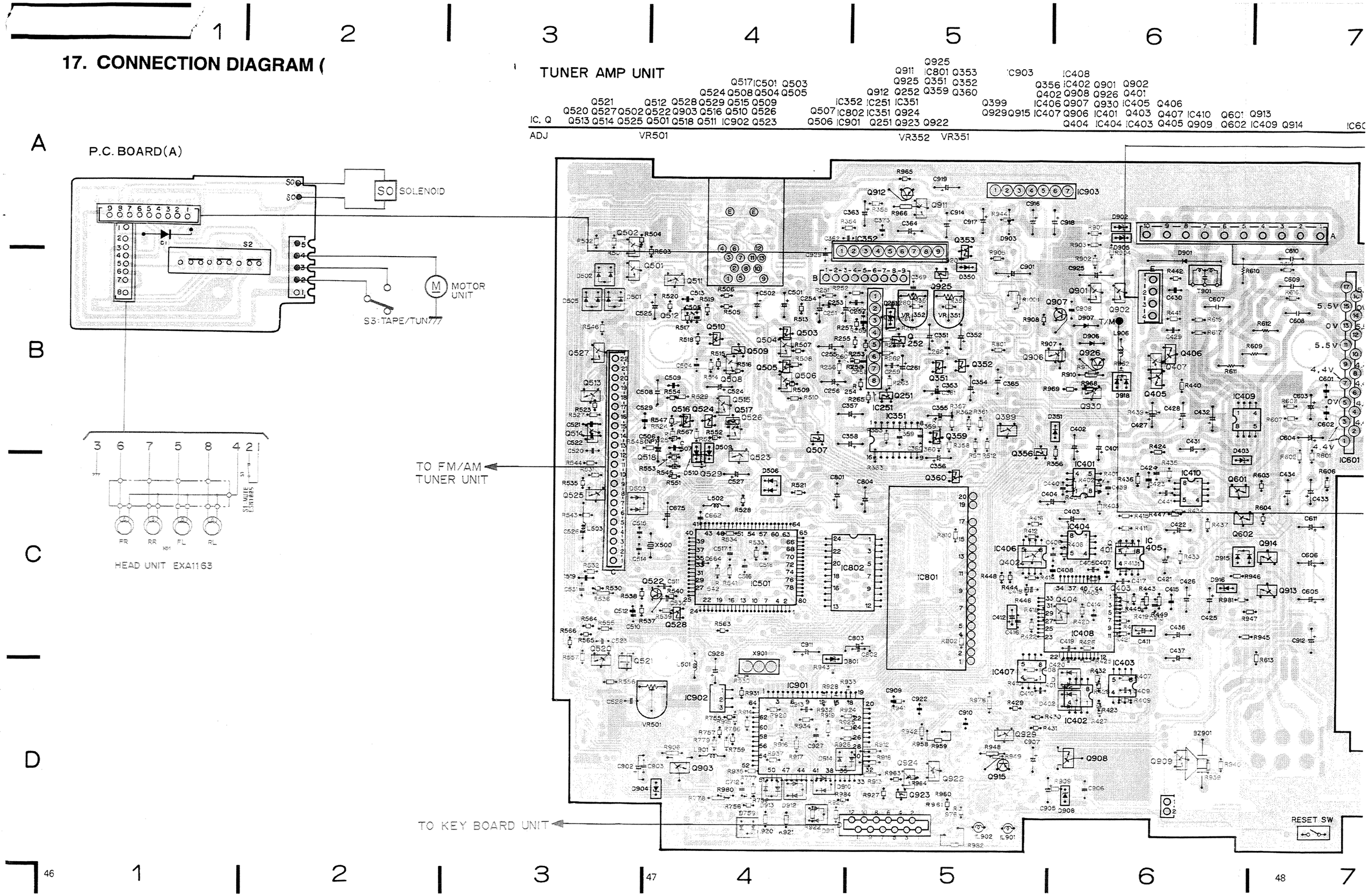

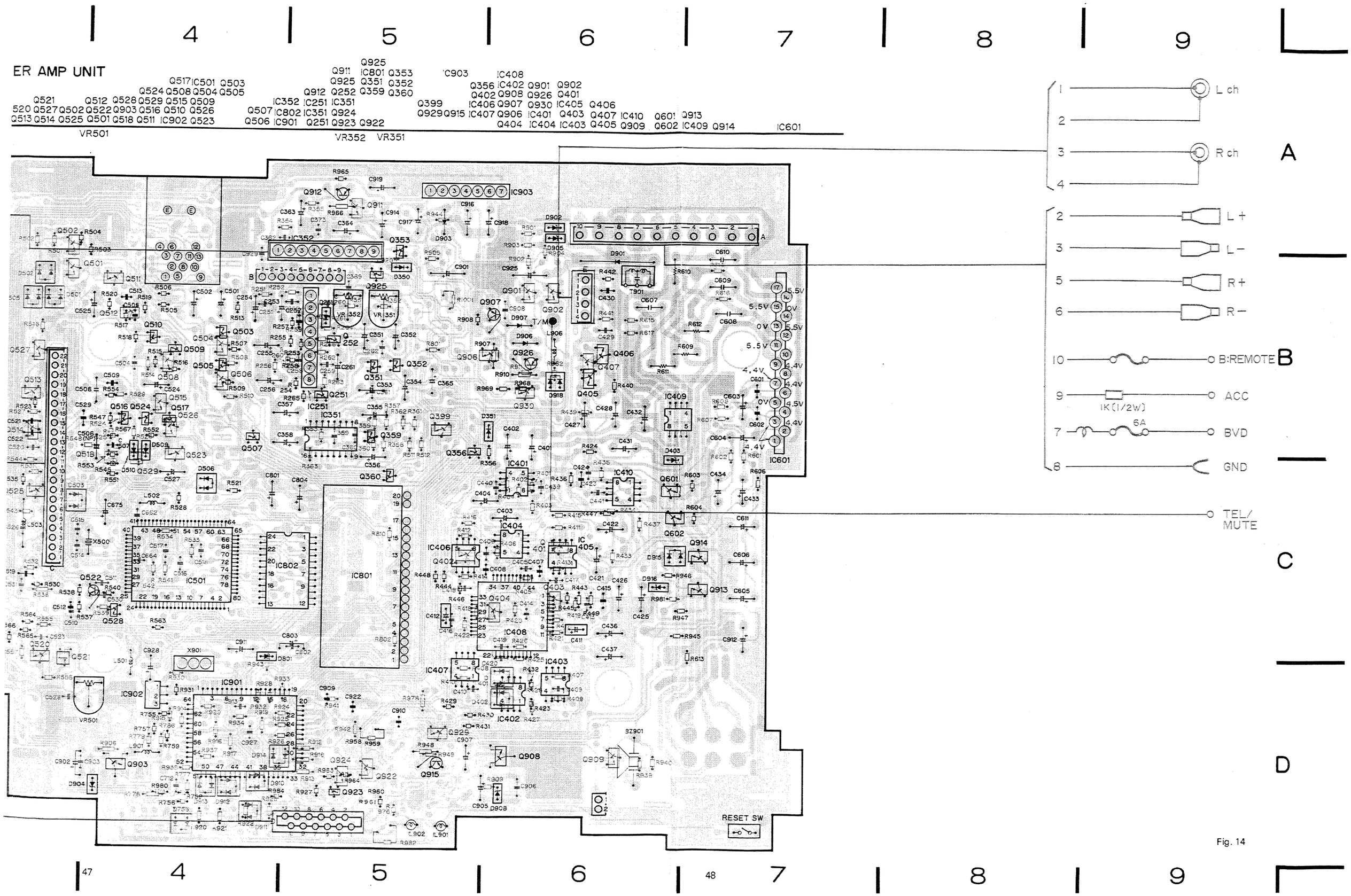
ER AMP UNIT
4
5
6
7
8
9
L ch
R ch
A
L +
L −
R +
R −
B:REMOTE
B
ACC
1K(1/2W)
6A
BVD
GND
TEL/
MUTE
C
D
RESET SW
47
48

Fig. 14

18. SCHEMATIC CIRCUIT DIAGRAM

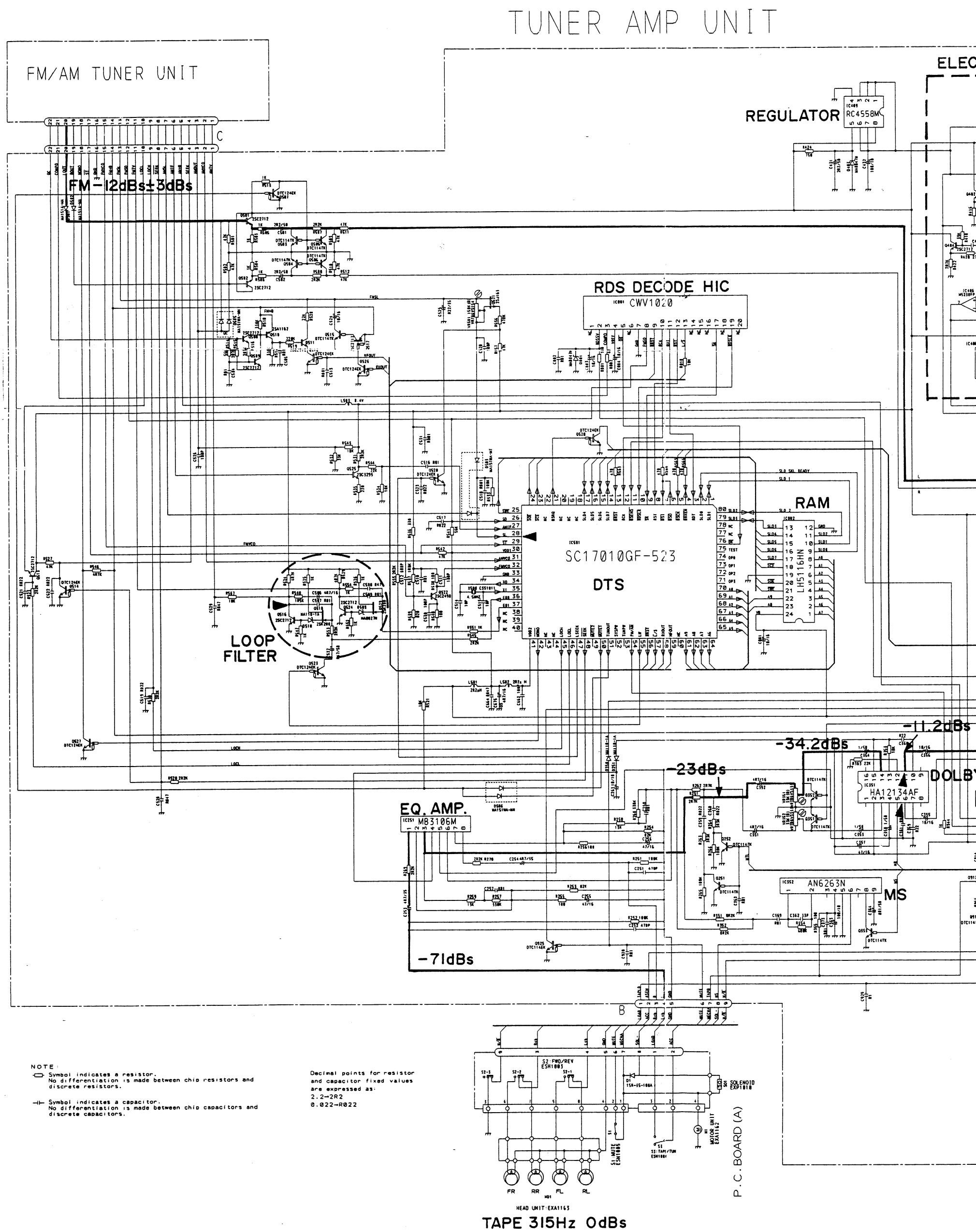

NOTE:

Symbol indicates a resistor.
No differentiation is made between chip resistors and discrete resistors.

Symbol indicates a capacitor.
No differentiation is made between chip capacitors and discrete capacitors.

Decimal points for resistor and capacitor fixed values are expressed as:
2.2→2R2
0.022→R022

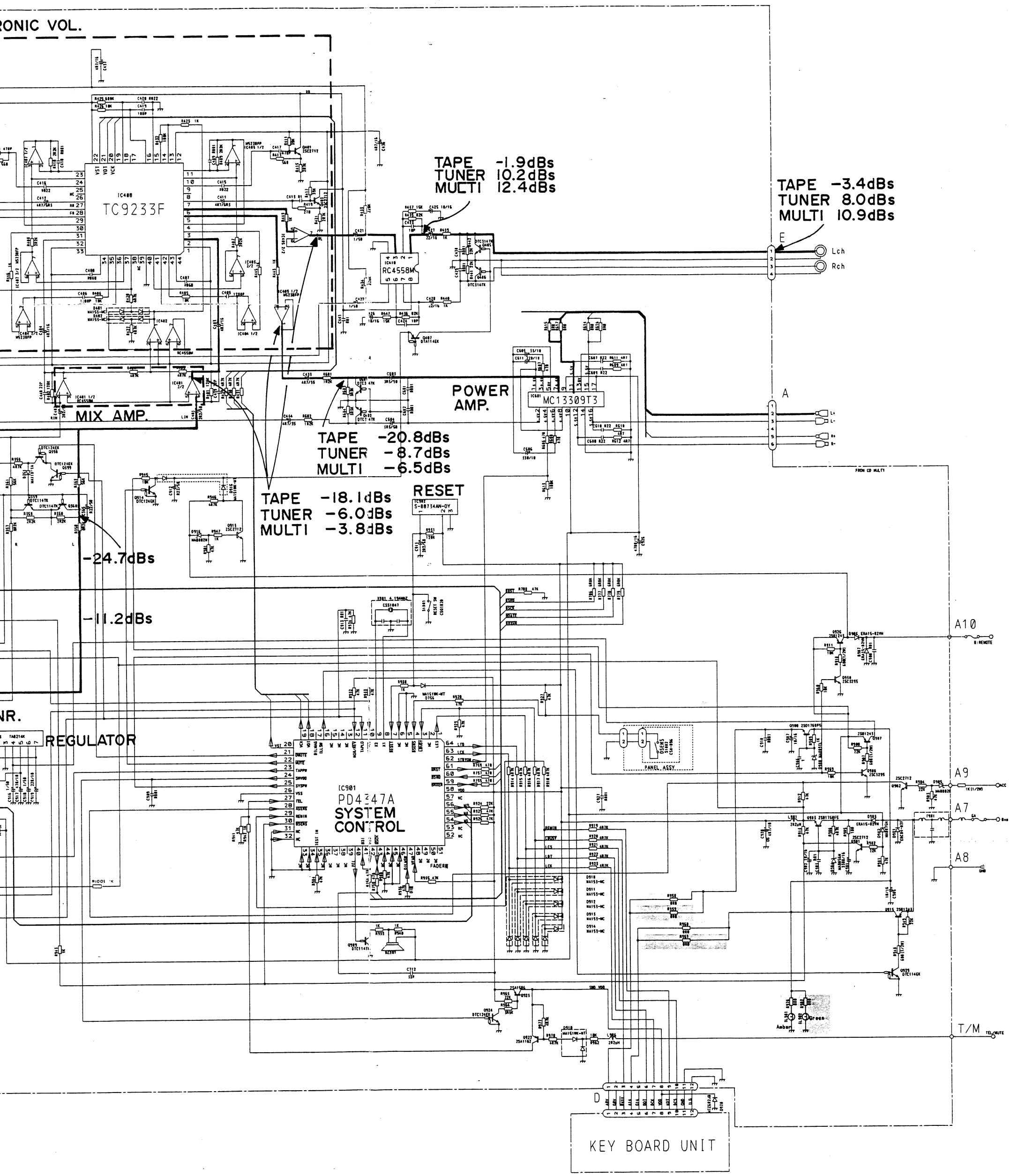

KEH-5401RDS/EW	KEH-5401RDS/IT
IL901	IL902
R958	R959
R960	R961

Fig. 15

19. CIRCUIT DIAGRAM AND PATTERN

19.1 FM/AM TUNER UNIT (CIRCUIT DIAGRAM)

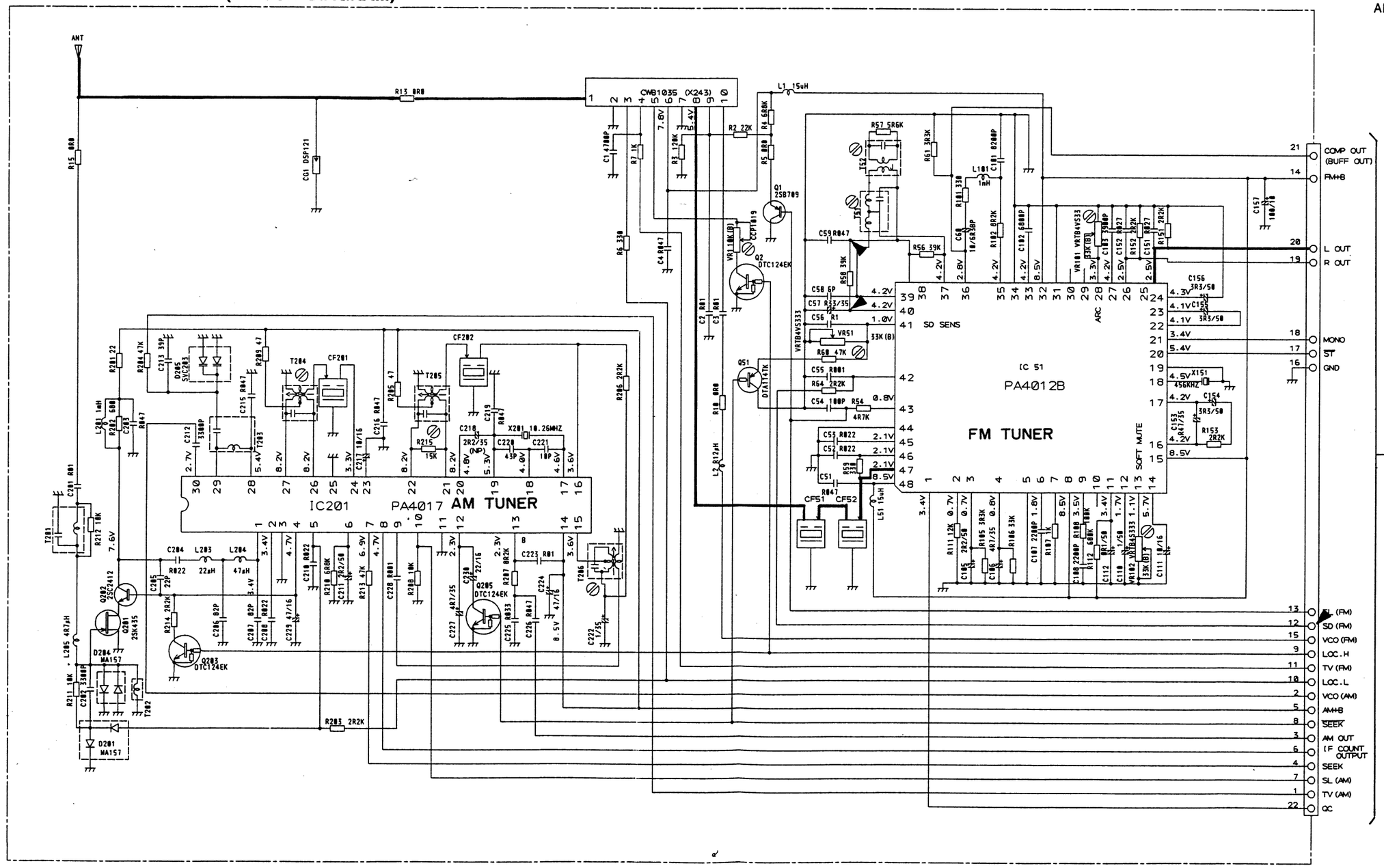

NOTE:

Symbol indicates a resistor.
No differentiation is made between chip resistors and discrete resistors.

Symbol indicates a capacitor.
No differentiation is made between chip capacitors and discrete capacitors.

Decimal points for resistor and capacitor fixed values are expressed as:
2.2→2R2
0.022→R022

19.2 FM/AM TUNER UNIT

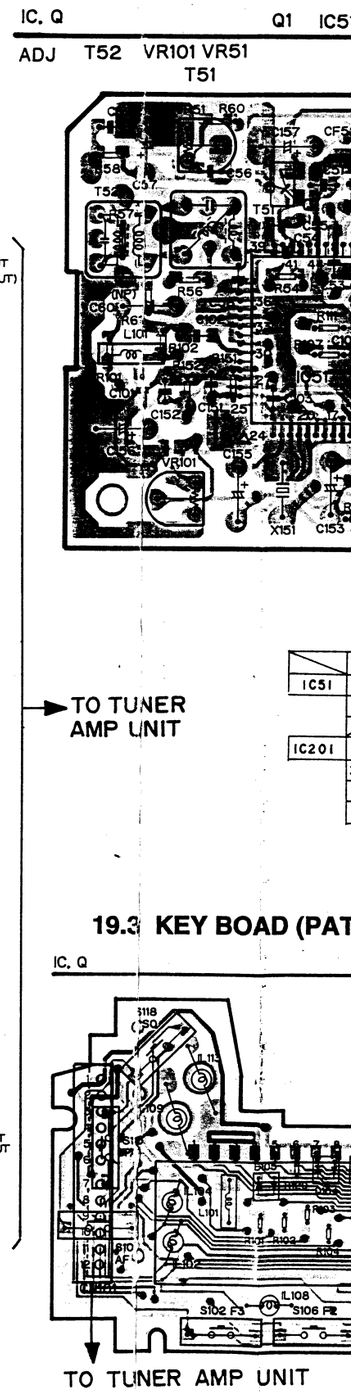

Fig. 16

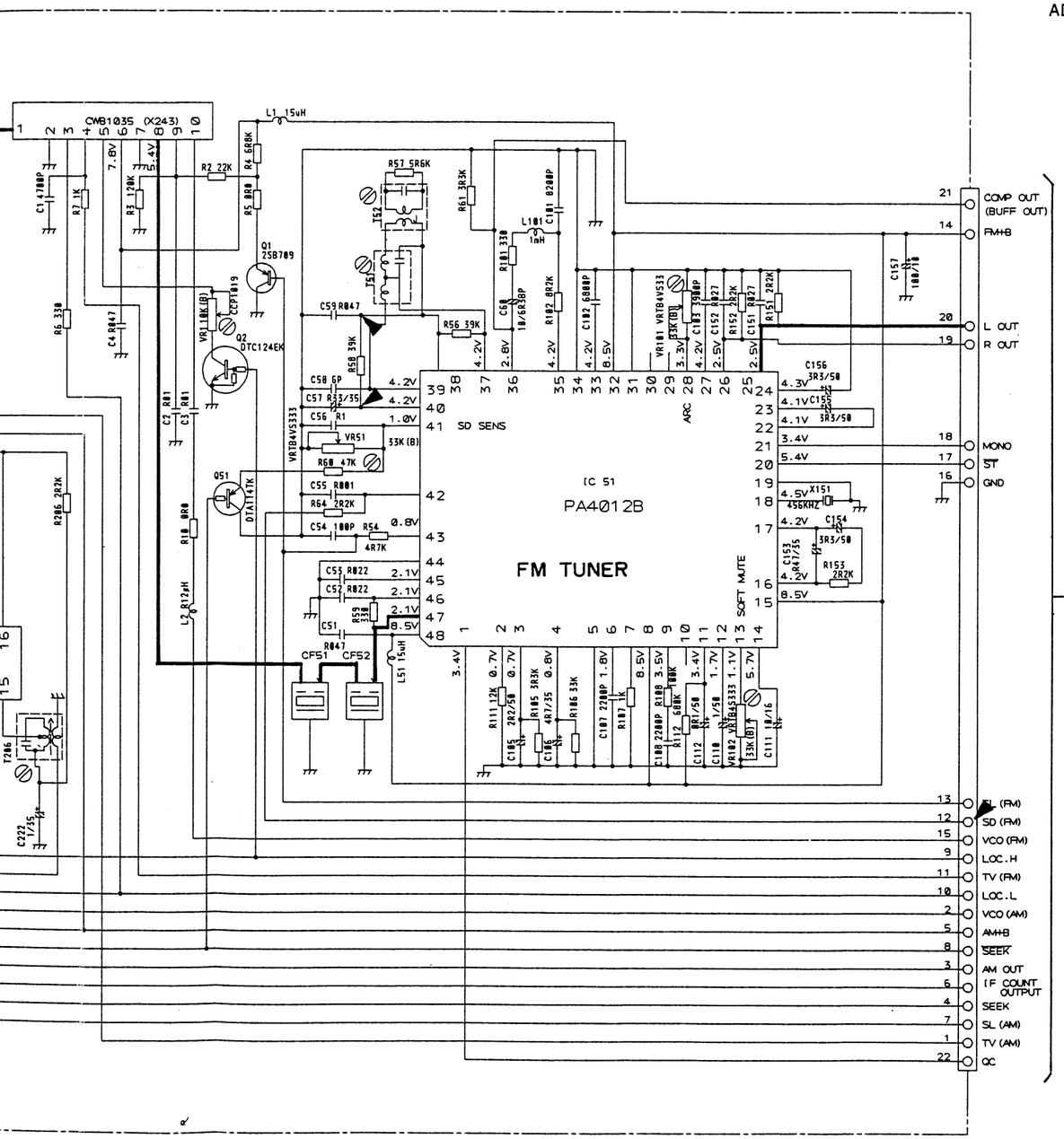

TO TUNER AMP UNIT

19.2 FM/AM TUNER UNIT (PATTERN)

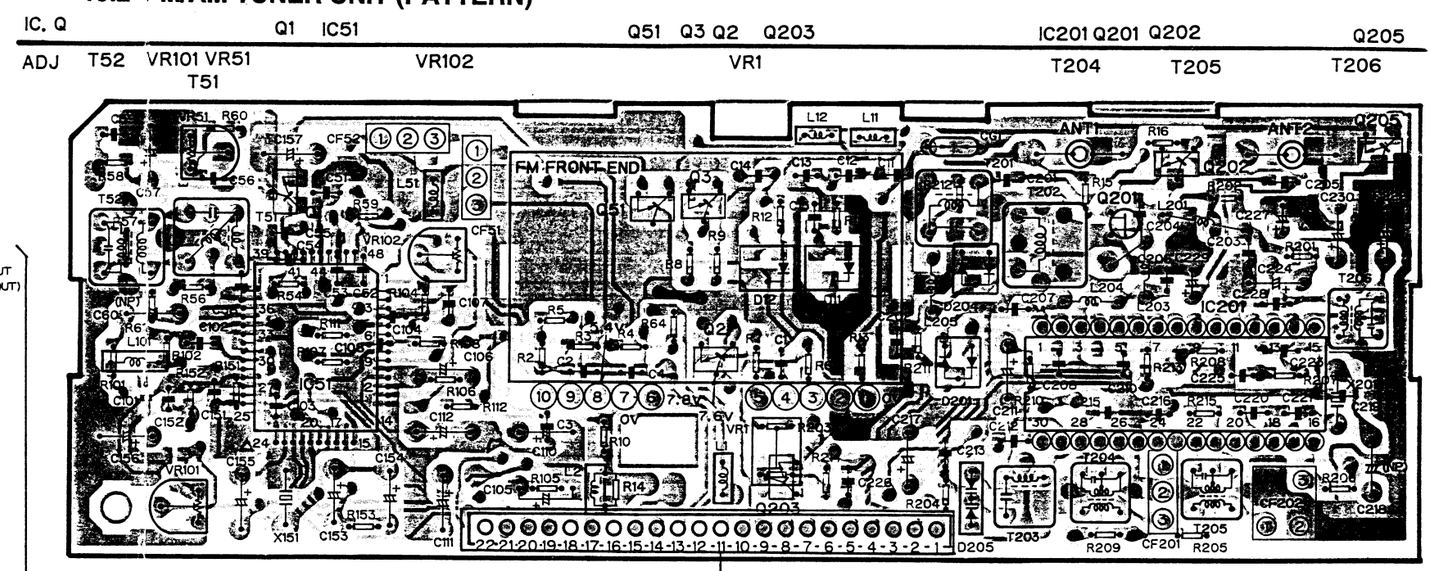

TO TUNER AMP UNIT

TO TUNER AMP UNIT

	1	2	3	4	5	6	7	8	9	10	11	12	13	14	15	16	17	18	19	20	21	22	23	24	25	26	27	28
IC51	3.4V	0.7V	0.7V	0.8V	—	1.8V	—	8.5V	3.5V	/	3.4V	1.7V	1.7V	5.7V	8.5V	4.2V	4.2V	4.5V	0V	5.4V	3.4V	4.1V	4.1V	4.3V	2.5V	2.5V	4.2V	3.3V
	29	30	31	32	33	34	35	36	37	38	39	40	41	42	43	44	45	46	47	48								
	/	/	0V	8.5V	4.2V	0V	4.2V	2.8V	4.2V	—	4.2V	4.2V	1.0V	—	0.8V	0V	2.1V	2.1V	2.1V	0.5V								
IC201	1	2	3	4	5	6	7	8	9	10	11	12	13	14	15	16	17	18	19	20	21	22	23	24	25	26	27	28
	3.4V	0.7V	—	0V	4.7V	—	—	6.9V	4.7V	—	—	0V	2.3V	2.3V	3.6V	—	3.6V	4.6V	4.0V	5.3V	4.8V	8.2V	8.2V	—	3.3V	0V	8.2V	8.2V	5.4V
	29	30																										
	—	2.7V																										

Fig. 17

19.3 KEY BOAD (PATTERN)

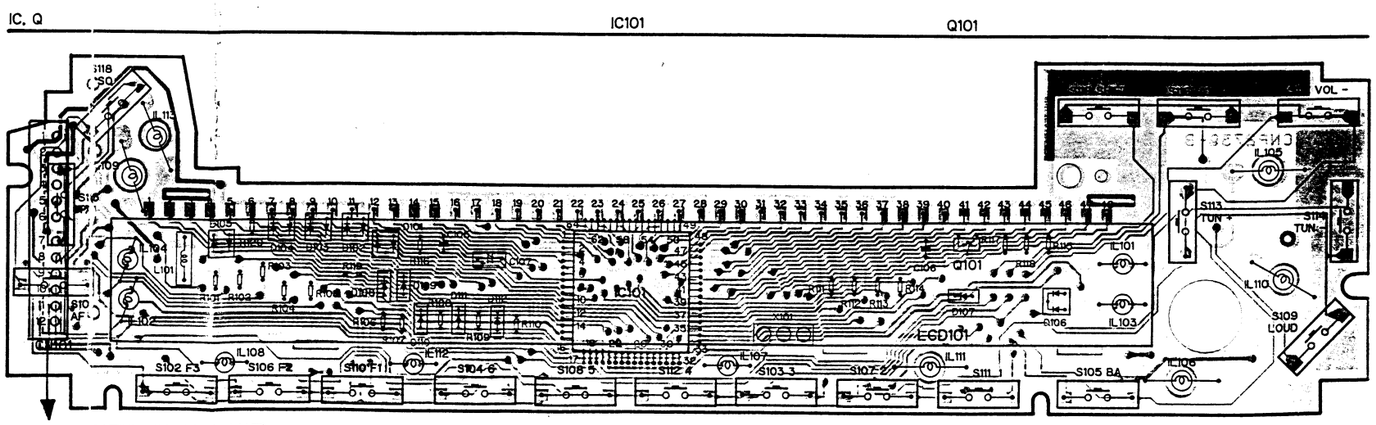

TO TUNER AMP UNIT

Fig. 18

Fig. 16

Decimal points for resistor and capacitor fixed values are expressed as:
2.2→2R2
0.022→R022

19.4 KEY BOAD (CIRCUIT DIAGRAM)

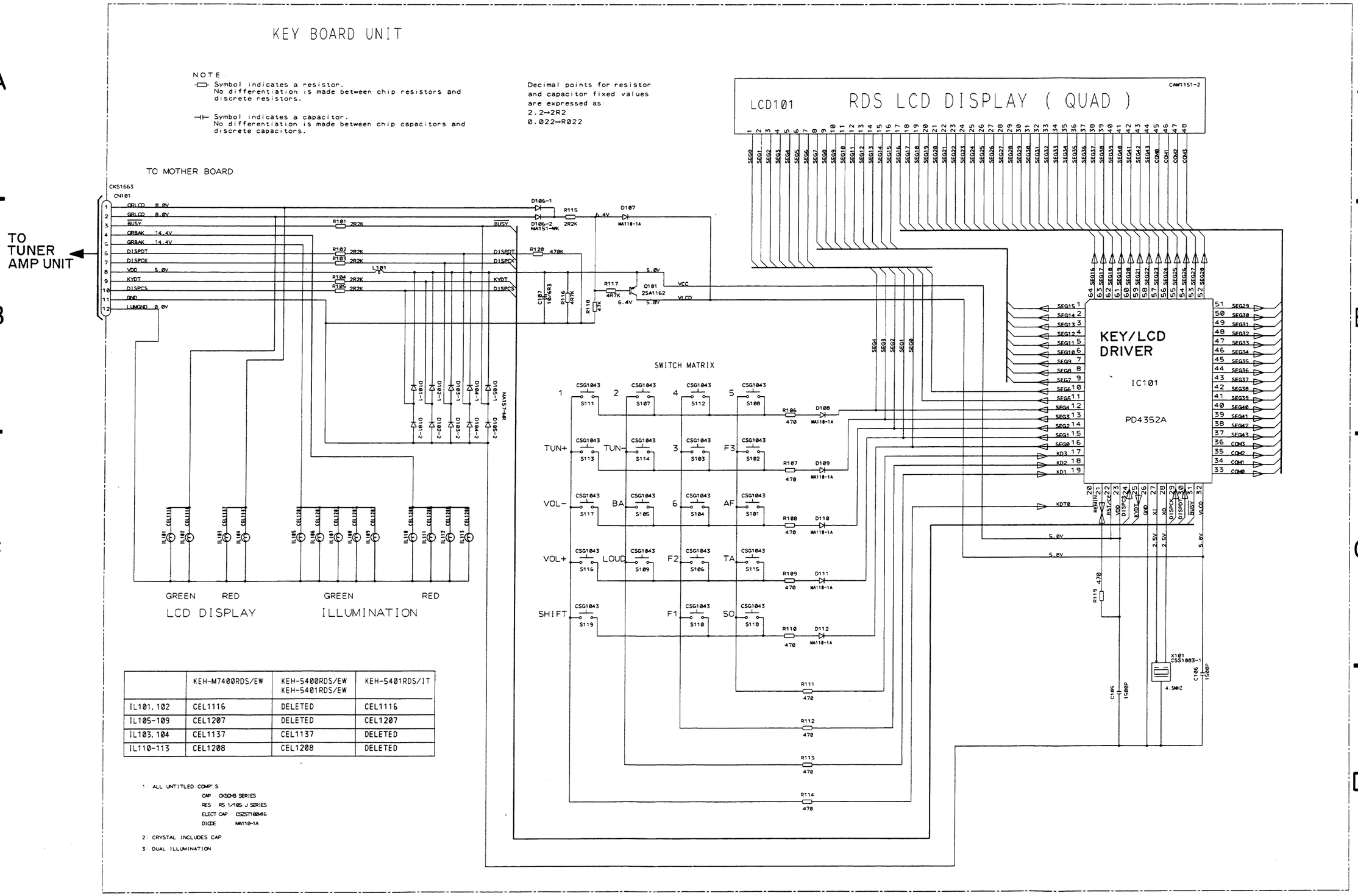

	KEH-M7400RDS/EW	KEH-5400RDS/EW KEH-5401RDS/EW	KEH-5401RDS/IT
IL101, 102	CEL1116	DELETED	CEL1116
IL105-109	CEL1207	DELETED	CEL1207
IL103, 104	CEL1137	CEL1137	DELETED
IL110-113	CEL1208	CEL1208	DELETED

1: ALL UNTITLED COMP'S
CAP : CKS0V8 SERIES
RES : RS 1/10S J SERIES
ELECT CAP : CSZST100M6
DIODE : MA110-1A

2: CRYSTAL INCLUDES CAP

3: DUAL ILLUMINATION

20. CHASSIS EXPLODED VIEW

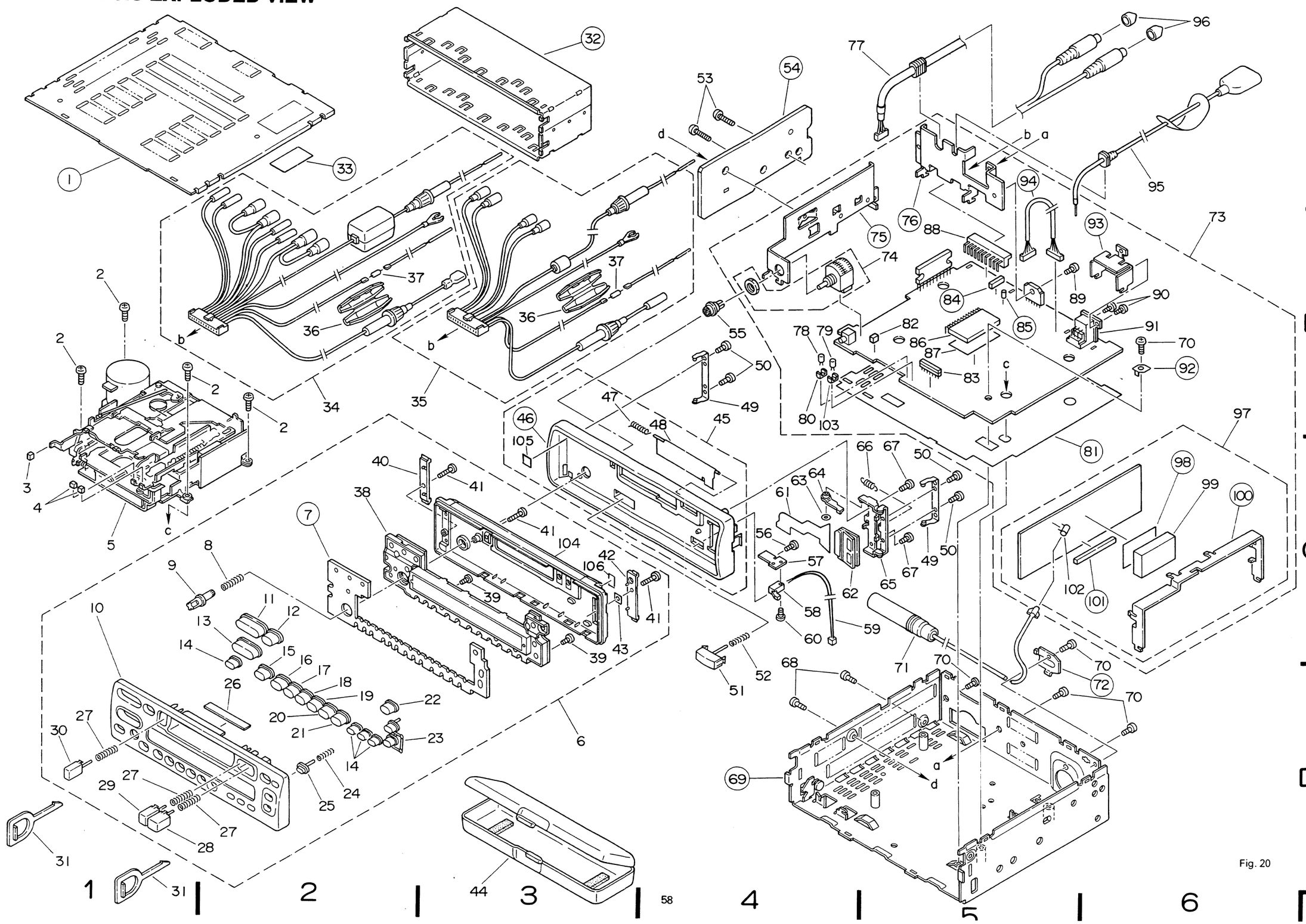

•Parts List (KEH-M7400RDS/EW)

NOTE:
- *The parts marked with "◉" may need long time to supply and their supply is subject to refuse as the case may be.*
- *Because the parts with encircled number shown on the dismantling drawing are not spare parts, we are unable to supply them in principle.*

Mark	No.	Description	Part No.
	1	Case	CNB1506
	2	Screw	BMZ26P050FMC
	3	Button	CAC2819
	4	ButtoN	CAC2820
◉	5	Cassette Mechanism Assy	EXK1735
	6	Grille Assy	CXA4528
	7	Cushion	CNM3162
	8	Spring	CBH1391
	9	Knob(Fader)	CAA1274
	10	Grille Unit	CNS2301
	11	Button(Vol)	CAC3047
	12	Button(Shift)	CAC3034
	13	Button(Tune)	CAC3048
	14	Button(-)	CAC3039
	15	Button(BA)	CAC3033
	16	Button(1)	CAC3041
	17	Button(2)	CAC3042
	18	Button(3)	CAC3043
	19	Button(4)	CAC3044
	20	Button(5)	CAC3045
	21	Button(6)	CAC3046
	22	Button(SO)	CAC3035
	23	Button Unit	CAC3037
	24	Spring	CBH1446
	25	Button	CAC3036
	26	Holder	CNC3910
	27	Spring	CBH1388
	28	Button(FF)	CAC3113
	29	Button(REW)	CAC3112
	30	Button(Eject)	CAC3040
	31	Handle	CNC3664
	32	Holder	CNC3342
	33	Cushion	CNM3203
	34	Cord Assy	CDE3505
	35	Cord Assy	CDE3411
	36	Cap	CNS1472
	37	Resistor	RS1/2P102JL
◉	38	Key Boad Unit	CWM2881
	39	Screw	CBA3162
	40	Stopper	CNR1223
	41	Screw	CBA1190
	42	Stopper	CNR1224
	43	Washer	CNC4257
	44	Case	CNS2269
	45	Panel Unit	CXA4705
	46	Panel	CNS2303
	47	Spring	CBH1437
	48	Door	CAT1413
	49	Holder Unit	CXA3998
	50	Screw	BPZ20P050FMC
	51	Button	CAC3049
	52	Spring	CBH1440
	53	Screw	BMZ30P120FMC
	54	Heat Sink	CNC3890
	55	Knob	CAA1250
	56	Screw	BPZ20P050FMC
	57	Holder	CNC390530FMC
	58	Switch	CSN-096
	59	Connector	CDE3052
	60	Screw	CBA-172
	61	P.C.Boad	CNP2746
	62	Socket	CKS1664
	63	Washer	CBF1037
	64	Arm Unit	CXA4332
	65	Holder Unit	CXA4331
	66	Spring	CBH1395
	67	Screw	BMZ20P030FMC
	68	Screw	BMZ30P080FMC
	69	Chassis Unit	CXA4330
	70	Screw	BMZ30P050FMC
	71	Antenna Cable	CDH1128
	72	Holder	CNC2913
	73	Tuner Amp Unit	CWM2842
	74	Volume(Fader)	CCS1181
	75	Holder	CNC3891
	76	Holder	CNC3892
	77	Cord	CDE3429
	78	Lamp	CEL1207
	79	Lamp(Green)	CEL1208
	80	Holder	CNV1906
	81	Insulator	CNM3163
	82	Plug	CKS-783
	83	Connector	CKS1260
	84	Plug	CKS1224
	85	Pin	CKF-047
	86	HIC	CWV1020
	87	Cushion	CNM3171
	88	Plug	CKS-467
	89	Screw	BMZ30P060FMC
	90	Screw	BMZ26P040FMC
	91	Connector	CKS1832
	92	Holder	CNC2218
	93	Holder	CNC3893
	94	Connector	CDE3431
	95	Cord	CDE3292
	96	Cap	CNV2680
	97	FM/AM Tuner Unit	CWE1250
	98	Insulator	CNM2105
	99	FM Front End	CWB1035
	100	Holder	CNC2880
	101	Plug	CKS1736
	102	Antenna Jack	CKX1010
	103	Holder	CNV1906
	104	Grille Cover	CNS2302
	105	Cushion	CNM3366
	106	Spacer	CNM2715

- The KEH-5400RDS/EW,KEH-5401RDS/EW,KEH-5401RDS/IT Parts Lists enumerate the parts which differ from those enumerated in the KEH-M7400RDS/EW Parts List only.
  The parts other than those enumerated in the former are indentical with those in the latter, to which you are requested to refer,accordingly.
  The KEH-M7400RDS/EW Parts List is given on page 59.

		7400RDS/EW	5400RDS/EW	5401RDS/EW	5401RDS/IT
	No. Description	Part No.	Part No.	Part No.	Part No.
◉	4 Cassette Mechanism Assy	EXK1735	EXK1785	EXK1785	EXK1785
	6 Grille Assy	CXA4528	CXA4530	CXA4532	CXA4533
	8 Sprig	CBH1391	CBH1391	·····	·····
	9 Knob	CAA1274	CAA1274	·····	·····
	10 Grille	CNS2301	CNS2351	CXA4514	CXA4514
	13 Button	CAC3048	CAC3115	CAC3115	CAC3115
	34 Cord	CDE3505	CDE3505	·····	·····
	35 Cord	·····	·····	CDE3411	CDE3411
	38 Key Boad Unit	CWM2881	CWM2882	CWM2882	CWM2883
	45 Panel Unit	CXA4705	CXA4706	CXA4707	CXA4707
	69 Chassis Unit	CXA4330	CXA4434	CXA4521	CXA4510
◉	73 Tuner Amp Unit	CWM2842	CWM2844	CWM2846	CWM2847
	77 Cord	CDE3429	·····	CDE3430	CDE3430
	78 Lamp	CEL1207	·····	·····	CEL1207
	79 Lamp	CEL1208	CEL1208	CEL1208	·····
	80 Holder	CNV1906	·····	·····	CNV1906
	90 Screw	BMZ26P040FMC	·····	·····	·····
	91 Connector	CKS1832	·····	·····	·····
	95 Cap	CNV2680	·····	CNW-829	CNW-829
	103 Holder	CNV1906	CNV1906	CNV1906	·····
	104 Grille Cover	CNS2302	CNS2302	CXA4515	CXA4515

21. CASSETTE MECHANISM ASSY EXPLODED VIEW

•KEH-M7400RDS/EW

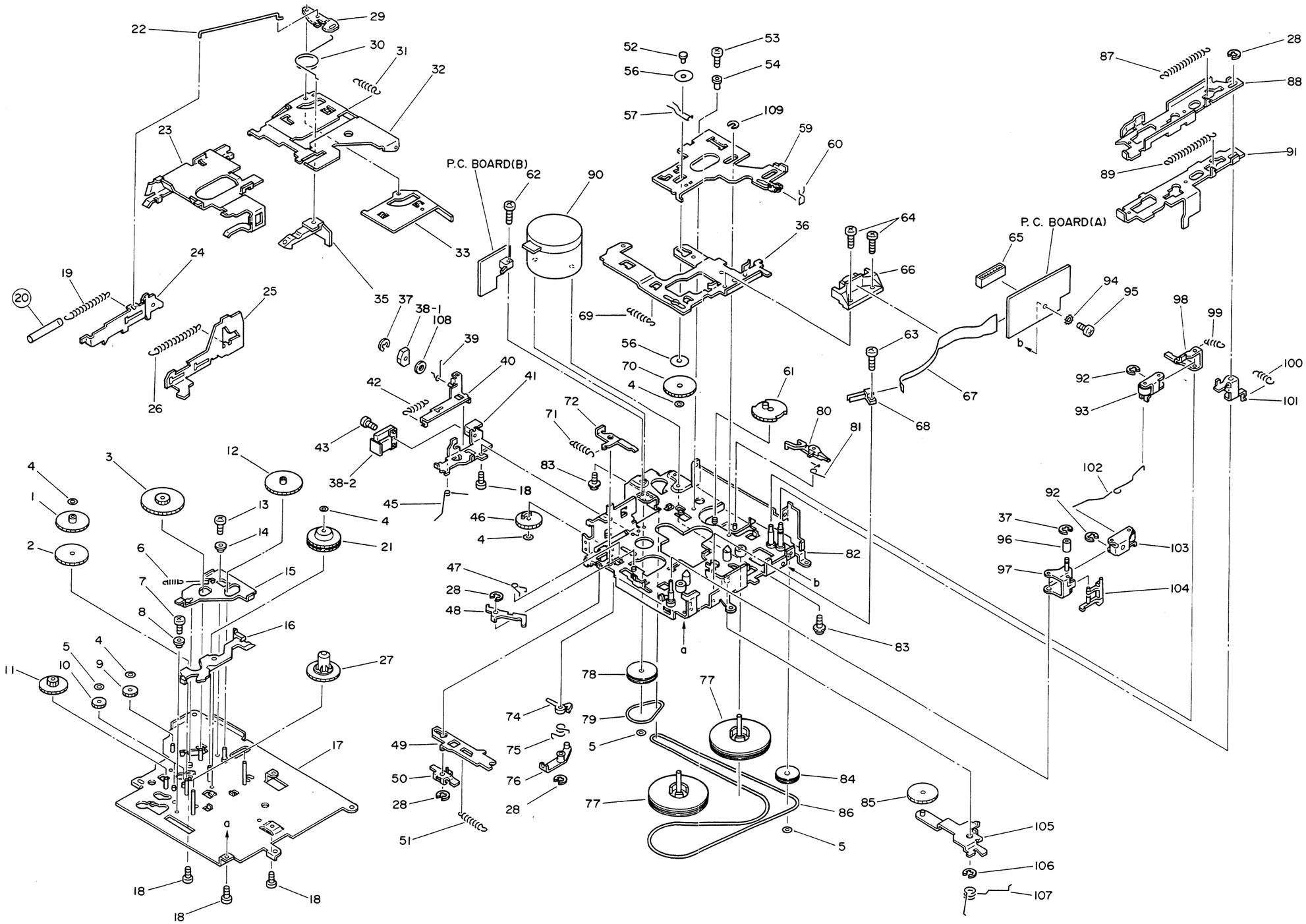

Fig. 21

•Parts List (KEH-M7400RDS/EW)

Mark No.	Description	Part No.
1	Gear	ENV1273
2	Gear	ENV1211
3	Gear	ENV1203
4	Washer	CBF1037
5	Washer	CBF1038
6	Spring	EBH1338
7	Screw	JFZ17P035FNI
8	Shaft	ELA1259
9	Gear	ENV1230
10	Gear	ENV1274
11	Gear	ENV1264
12	Gear	ENV1204
13	Screw	JFZ17P018FNI
14	Collar	ELA1244
15	Arm	ENC1241
16	Arm	ENV1261
17	Sub Chassis Unit	EXA1169
18	Screw	BMZ20P025FMC
19	Spring(Black)	EBH1358
20	Tube	
21	Gear Unit	EXA1206
22	Spring	EBH1308
23	Holder	ENC1257
24	Lever	ENC1243
25	Lever	ENC1235
26	Spring	EBH1359
27	Real Unit	EXA1204
28	Washer	YE15FUC
29	Arm	EXA1198
30	Spring	EBH1374
31	Spring	EBH1364
32	Frame	ENC1204
33	Arm	ENC1263
34	·····	
35	Lever	ENV1222
36	Head Base Unit	EXA1203
37	Washer	YE12FUC
38	Solenoid	EXP1008
39	Spring	EBH1353
40	Lever Unit	EXA1172
41	Bracket	ENC1239
42	Spring	EBH1339
43	Screw	EBA1023
44	·····	
45	Spring	EBH1340
46	Gear	ENV1262
47	Spring	EBH1337
48	Arm	ENC1236
49	Lever Unit	EXA1173
50	Arm	ENC1237
51	Spring	EBH1335
52	Shaft	ELA1266
53	Screw	JFZ20P025FNI
54	Collar	ELA1267
55	·····	
56	Washer	EBF1015
57	Spring	EBH1372
58	·····	
59	Lever	ENC1275
60	Spring	EBH1361
61	Gear	ENV1205
62	Screw	CBA1054
63	Screw	CBA1038
64	Screw	CBA1015
65	Plug	CKS1056
66	Head Unit	EXA1163
67	P.C.Board	ENP1042
68	Switch	ESN1005
69	Spring	EBH1334
70	Gear	ENV1208

Mark No.	Description	Part No.
71	Spring	EBH1333
72	Arm	ENC1240
73	·····	
74	Arm	ENV1265
75	Spring	EBH1378
76	Arm Unit	EXA1171
77	Flywheel Unit	EXA1161
78	Gear	ENV1229
79	Belt	ENT1020
80	Arm	ENV1206
81	Spring	EBH1317
82	Chassis Unit	EXA1254
83	Screw	PMS26P025FUC
84	Pulley	ENV1207
85	Gear	ENV1209
86	Belt	ENT1018
87	Spring(Silver)	EBH1322
88	Lever(FF)	ENC1244
89	Spring(Brown)	EBH1365
90	Motor Unit	EXA1162
91	Lever(REW)	ENC1245
92	Washer	YE20FUC
93	Pinch Roller Unit	EXA1193
94	Washer	WH23FMC
95	Screw	BSZ23P050FMC
96	Roller	ELA1247
97	Arm Unit	EXA1166
98	Arm	ENC1266
99	Spring	EBH1368
100	Spring	EBH1367
101	Arm	ENC1272
102	Spring	EBH1381
103	Pinch Roller Unit	EXA1194
104	Arm	ENV1227
105	Arm Unit	EXA1155
106	Washer	YE30FUC
107	Spring	EBH1310
108	Washer	CBF1051
109	Washer	YE25FUC

22. CASSETTE MECHANISM ASSY EXPLODED VIEW

• KEH-5400RDS/EW, KEH-5401/EW,IT

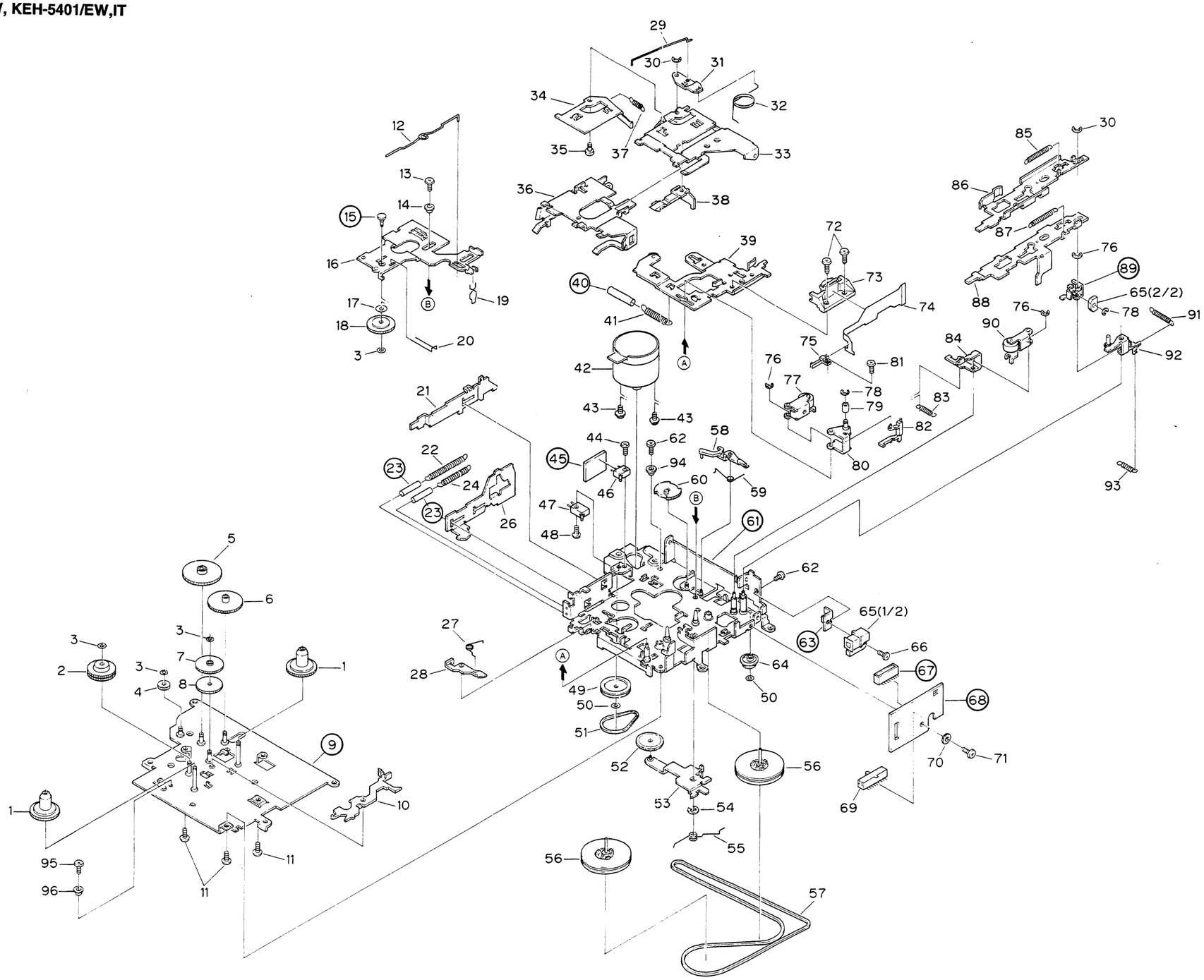

Fig. 22

•Parts List (KEH-5400RDS/EW, KEH-5401/EW,IT)

Mark No.	Description	Part No.	Mark No.	Description	Part No.
1	Reel Unit	EXA1167	51	Belt	ENT1020
2	Gear Unit	EXA1159	52	Gear	ENV1209
3	Washer	CBF1037	53	Arm Unit	EXA1155
4	Gear	ENV1230	54	Washer	YE30FUC
5	Gear	ENV1203	55	Spring	EBH1310
6	Gear	ENV1204	56	Flywheel Unit	EXA1161
7	Gear	ENV1212	57	Belt	ENT1018
8	Gear	ENV1211	58	Arm	ENV1206
9	Sub Chassis Unit	EXA1151	59	Spring	EBH1317
10	Arm	ENV1210	60	Gear	ENV1205
11	Screw	BMZ20P025FMC	61	Chassis Unit	EXA1174
12	Spring	EBH1304	62	Screw	JFZ20P025FNI
13	Screw	JFZ20P040FNI	63	Bracket	ENC1250
14	Collar	ELA1220	64	Pulley	ENV1207
15	Shaft	ELA1219	65	Solenoid	EXP1008
16	Lever	ENC1202	66	Screw	EBA1023
17	Washer	EBF1015	67	Plug	CKS1056
18	Gear	ENV1208	68	P.C.Board	ENP1045
19	Spring	EBH1313	69	Switch	ESH1003
20	Spring	EBH1314	70	Washer	WH23FMC
21	Lever	ENC1243	71	Screw	BSZ23P040FMC
22	Spring	EBH1307	72	Screw	CBA1015
23	Tube		73	Head Unit	EXA1163
24	Spring	EBH1306	74	P.C.Board	ENP1042
25	·····		75	Switch	ESN1005
26	Lever	ENC1209	76	Washer	YE20FUC
27	Spring	EBH1316	77	Pinch Roller Unit	EXA1154
28	Arm	ENC1248	78	Washer	YE12FUC
29	Spring	EBH1308	79	Roller	ELA1250
30	Washer	YE15FUC	80	Arm Unit	EXA1166
31	Arm	ENC1221	81	Screw	CBA1038
32	Spring	EBH1305	82	Arm	ENV1227
33	Frame	ENC1204	83	Spring	EBH1312
34	Arm	ENC1215	84	Arm	ENC1212
35	Shaft	ELA1251	85	Spring	EBH1322
36	Holder	ENC1205	86	Lever	ENC1246
37	Spring	EBH1344	87	Spring	EBH1331
38	Lever	ENV1222	88	Lever	ENC1247
39	Head Base Unit	EXA1152	89	Arm Unit	EXA1158
40	Tube		90	Pinch Roller Unit	EXA1153
41	Spring	EBH1315	91	Spring	EBH1318
42	Motor Unit	EXA1162	92	Arm Unit	EXA1157
43	Screw	PMS26P025FUC	93	Spring	EBH1345
44	Screw	CBA1054	94	Collar	ELA1229
45	P.C.Board	ENP1047	95	Screw	JGZ17P035FNI
46	Switch	ESH1004	96	Collar	ELA1252
47	·····				
48	·····				
49	Gear	ENV1229			
50	Washer	CBF1038			

23. KEY BOARD UNIT EXPLODED VIEW

•Parts List

Mark	No.	Description	Part No.
◉	1	Key boad unit (7400RDS/EW)	CWM2881
		Key boad unit (5400RDS/EW, 5401RDS/EW)	CWM2882
		Key boad unit (5401RDS/IT)	CWM2882
	2	Lens	CNV3156
	3	Lens	CNV2913
	4	Lens	CNV2915
	5	Holder	CNC3894
	6	LCD	CAW1151
	7	Connector	CNV2916
	8	Plug	CKS2007
	9	Lamp (7400RDS/EW, 5400RDS/EW, 5401RDS/EW)	CEL1137
	10	Lamp (7400RDS/EW, 5401RDS/IT)	CEL1136
	11	Lamp (7400RDS/EW, 5400RDS/EW, 5401RDS/EW)	CEL1208
	12	Lamp (7400RDS/EW, 5401RDS/IT)	CEL1207
	13	Bush (7400RDS/EW, 5401RDS/IT)	CEL2858
	14	Bush (7400RDS/EW, 5400RDS/EW, 5401RDS/EW)	CEL2858
	15	Insulator (7400RDS/EW, 5401RDS/IT)	CNM3361

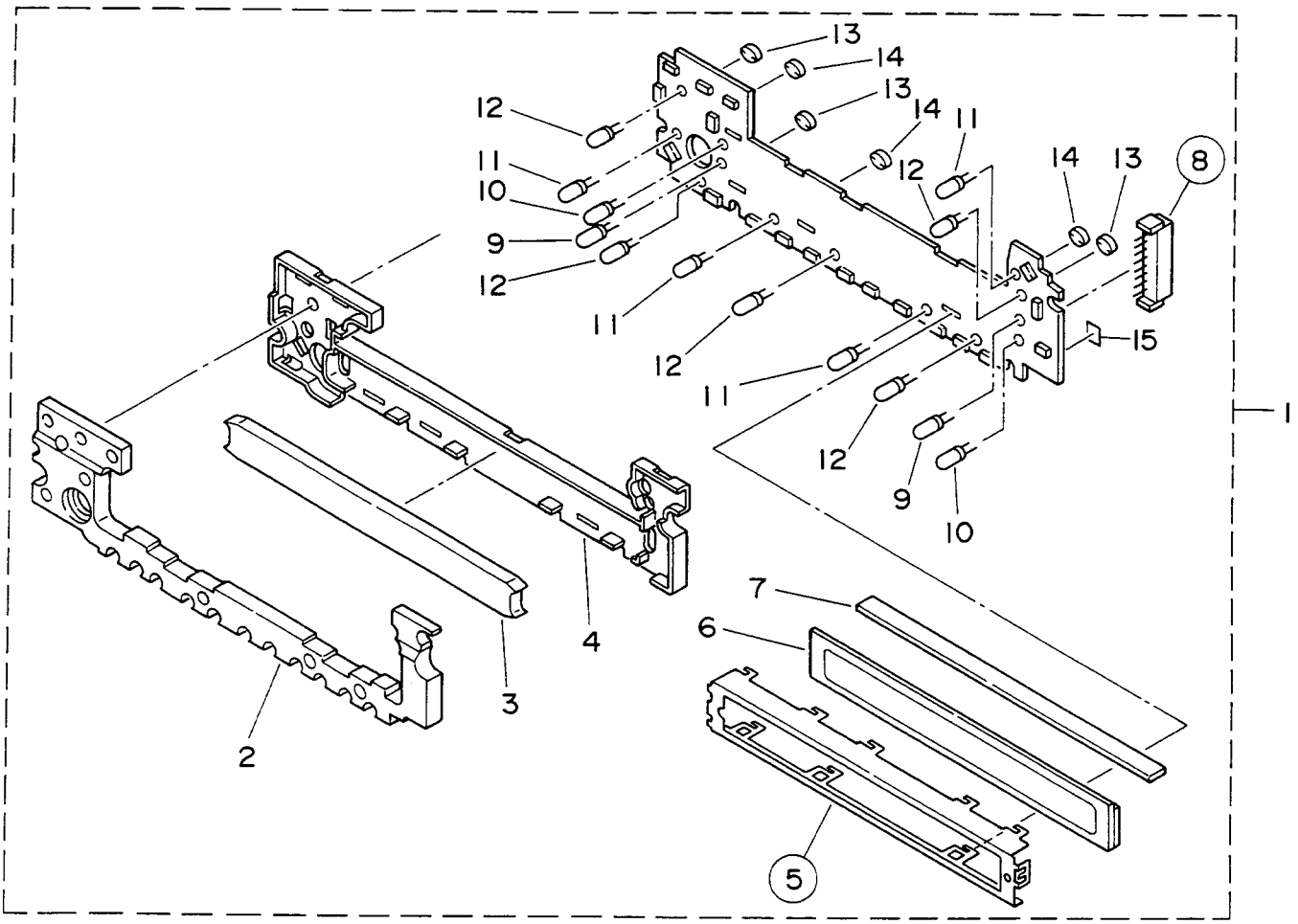

Fig. 23

24. PACKING METHOD

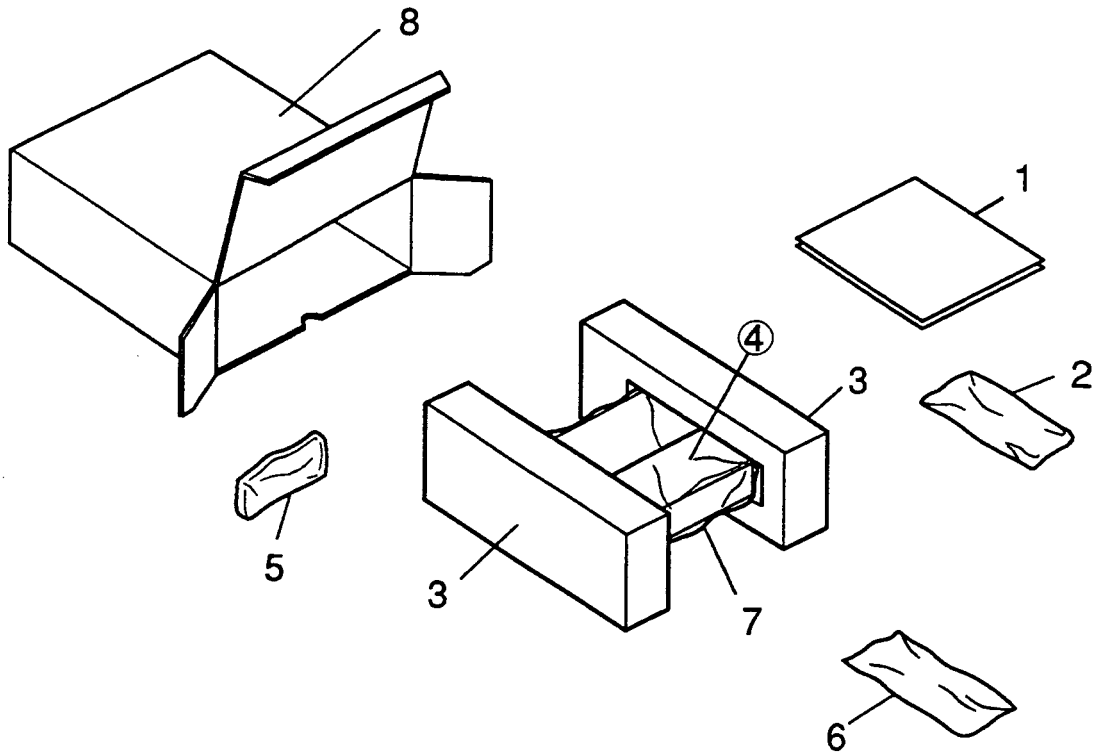

Fig. 24

•Parts List (KEH-M7400RDS/EW)

*:Non spare part

Mark	No.	Description	Part No.	Mark	No.	Description	Part No.
	1-1	Owner's Manual	CRD1526		5	Case	CNS2269
	1-2	Owner's Manual	CRD1527		6	Accessory Assy	CEA1633
	1-3	Owner's Manual	CRD1566		6-1	Screw(×1)	CBA-102
*	1-4	Cataution Card	CRN1007		6-2	Screw(×1)	CBA1002
*	1-5	Cataution Card	CRP1099		6-3	Cord	CDE1289
*	1-6	Card	CRY-062		6-4	Handle(×2)	CNC3664
*	1-7	Passport	CRY1013	*	6-5	Plyethylene Bag	CEG1011
	2	Cord	CDE3505		6-6	Strap	CNF-111
	3	Styrofoam	CHP1446		6-7	Nut(×2)	NF50FNC
*	4	Holder	CNC3342		6-8	Bush	CNV1009
					7	Cover	CEG1092
					8	Carton	CHG2096

• The KEH-5400RDS/EW, KEH-5401RDS/EW, KEH-5401RDS/IT Parts Lists enumerate the parts which differ from those enumerated in the KEH-M7400RDS/EW Parts List only.
The parts other than those enumerated in the former are indentical with those in the latter, to which you are requested to refer, accordingly.
The KEH-M7400RDS/EW Parts List is given on page 69.

		7400RDS/EW	5400RDS/EW	5401RDS/EW	5401RDS/IT
No.	Description	Part No.	Part No.	Part No.	Part No.
1-1	Owner's Manual	CRD1526	CRD1528	CRD1529	CRD1530
1-2	Owner's Manual	CRD1527	———	———	———
1-3	Owner's Manual	CRD1566	CRD1567	CRD1567	CRD1567
*1-4	Cataution Card	CRN1007	———	CRN1007	———
*1-7	Passport	CRY1013	———	CRY1013	———
2	Cord	CDE3505	CDE3505	CDE3411	CDE3411
8	Carton	CHG2096	CHG2098	CHG2097	CHG2099

Owner's Manual

Part No.	Model	Language
CRD1526	KEH-M7400RDS/EW	English, French, German, Spanish
CRD1527	KEH-M7400RDS/EW	Italian, Swedish, Norwegian, Dutch, Finnish
CRD1528	KEH-5400RDS/EW	English, French, Spanish, Dutch, Portuguese
CRD1529	KEH-5401RDS/EW	French, German
CRD1530	KEH-5401RDS/IT	English, Swedish, Norwegian, Italian, Finnish
CRD1566	KEH-M7400RDS/EW	English, French, German, Spanish, Swedish, Norwegian, Dutch, Italian, Finnish
CRD1567	KEH-5400RDS/EW KEH-5401RDS/EW KEH-5401RDS/IT	English, French, German, Spanish, Swedish, Norwegian, Dutch, Italian, Finnish, Portuguese

25. ELECTRICAL PARTS LIST

•Parts List

NOTE:

- *Parts whose parts numbers are omitted are subject to being not supplied.*
- *The part numbers shown below indicate chip components.*

  Chip Resistor

  RS1/□S□□□J,RS1/□□S□□□J

  Chip Capacitor (except for CQS.....)

  CKS....., CCS....., CSZS.....

Unit Number :
Unit Name : FM/AM Tuner Unit

MISCELLANEOUS

Circuit Symbol & No.	Part Name	Part No.
IC 51		PA4012B
IC 201		PA4017
Q 1		2SB709
Q 2		DTC124EK
Q 51		DTA114TK
Q 201		2SK435
Q 202		2SC2412K
Q 203 205		DTC124EK
D 201 204		MA157-MR
D 205		SVC203-M1
L 1 51	Inductor	CTF1241
L 2	Inductor	CTF1065
L 101	Inductor	CTF1126
L 201	Inductor	CTF1084
L 203	Ferri-Inductor	LAU220K
L 204	Ferri-Inductor	LAU470K
L 205	Ferri-Inductor	LAU4R7K
T 51	Coil	CTE1021
T 52	Coil	CTE1022
T 201	Coil	CTB1020
T 202	Coil	CTB1004
T 203	Coil	CTB1040
T 204	Coil	CTE1037
T 205	Coil	CTE1038
T 206	Coil	CTE1039
CG 1		DSP-201M-S00B
CF 51 52	Filter	CTF1057
CF201	Ceramic Filter	CTF1041
CF202	Filter	CTF1085
X 151	Ceramic Resonator	CSS1055
X 201	Crystal Resonator	CSS1014
VR 1	Semi-fixed 10kΩ(B)	CCP1019
VR 51 101 102	Semi-fixed 33kΩ(B)	VRTB4VS333
	FM Front End	CWB1035

RESISTORS

Circuit Symbol & No.	Part Name	Part No.
R 2		RS1/10S223J
R 3		RS1/10S124J
R 4 10		RS1/10S682J
R 5 13 15		RS1/10S0R0J
R 6 59 101		RS1/10S331J
R 7		RS1/10S102J
R 54		RS1/10S472J
R 56 58		RS1/10S393J
R 57		RS1/10S562J
R 60		RS1/10S473J
R 61 105		RS1/10S332J
R 64		RS1/10S222J
R 102		RS1/10S822J
R 106		RS1/10S333J
R 107		RS1/10S102J
R 108		RS1/10S104J
R 111		RS1/10S123J
R 112		RS1/10S684J
R 151 152 153		RS1/10S222J
R 201		RS1/10S220J
R 202		RS1/10S681J
R 203 206 214		RS1/10S222J
R 204 213		RS1/10S473J
R 205 209		RS1/10S470J
R 207		RS1/10S822J
R 208 211 212		RS1/10S103J
R 210		RS1/10S682J
R 215		RS1/10S153J

CAPACITORS

Circuit Symbol & No.	PartName	Part No.
C 1		CKSQYB472K50
C 2 3		CKSQYB103K50
C 4 51 59		CKSQYF473Z25
C 52 53		CKSQYB223K25
C 54		CCSQSL101J50
C 55		CKSQYB102K50
C 56		CKSQYF104Z25
C 57		CSZAR33K35
C 58		CCSQCH060D50
C 60		CEALNP100M6R3
C 101		CKSQYB822K50
C 102		CKSQYB682K50
C 103		CKSQYB392K50
C 105		CEA2R2M50LL
C 106		CEA4R7M35LL

======Circuit Symbol & No.	Part Name=====	Part No.
C 107 108		CKSQYB222K50
C 110		CEA010M50LL
C 111		CEA100M16LL
C 112		CEA0R1M50LL
C 151 152		CKSQYB273K25
C 153		CSZAR47M35L
C 154 155 156		CEA3R3M50LL
C 157		CEA101M10LS
C 201 223 228		CKSQYB103K25
C 202 212		CKSQYB332K50
C 203 215 216 219 226		CKSQYF473Z25
C 204 208 210		CKSQYB223K25
C 205		CCSQCH220J50
C 206 207		CCSQCH820J50
C 211		CEA2R2M50LL
C 213		CCSQCH390J50
C 217		CEA100M16LL
C 218		CEA2R2M35NPLL
C 220		CCSQCH430J50
C 221		CCSQCH100D50
C 222		CSZA010K35L
C 224		CEA470M16LL
C 225		CKSQYB333K25
C 227		CEA4R7M35LS
C 229		CEA470M16LS
C 230		CEA220M16LL

Unit Number :
Unit Name :Key Board Unit (KEH-M7400RDS/EW)

MISCELLANEOUS

======Circuit Symbol & No.	Part Name=====	Part No.
IC 101		SC17106GC-513
Q 101		2SA1162
D 101 102 103 104 105		MA157-MR
D 106		MA151WK-MT
D 107 108 109 110 111 112		MA110-1A
L 101	Inductor	CTF1102
X 101	Ceramic Resonator	CSS1083
S 101 102 103 104	Switch	CSG1043
S 105 106 107 108	Switch	CSG1043
S 109 110 111 112	Switch	CSG1043
S 113 114 115 116	Switch	CSG1043
S 117 118 119	Switch	CSG1043
IL 101 102	Lamp	CEL1116
IL 103 104	Lamp	CEL1137
IL 105 106 107 108	Lamp	CEL1207
IL 109	Lamp	CEL1207
IL 110 111 112 113	Lamp	CEL1208
	LCD	CAW1151

RESISTORS

======Circuit Symbol & No.	Part Name=====	Part No.
R 101 102 103 104 105		RS1/10S222J
R 106 107 108 109 110 111 112 113 114 119		RS1/10S471J
R 115		RS1/10S222J
R 116		RS1/10S472J
R 117		RS1/10S472J
R 119		RS1/10S471J
R 120		RS1/10S474J

CAPACITORS

======Circuit Symbol & No.	Part Name=====	Part No.
C 105 106		CKSQYB152K50
C 107		CSZSR100M6R3

Unit Number :
Unit Name :Panel Assy

======Circuit Symbol & No.	Part Name=====	Part No.
S1002	Switch(DSENS)	CSN-096

Unit Number :
Unit Name : Tuner Amp Unit(KEH-M7400RDS/EW)

MISCELLANEOUS

======Circuit Symbol & No.	Part Name=====	Part No.
IC 251		MB3106M
IC 351		HA12134AF
IC 352		AN6263N
IC 401 402 409 410		RC4558M
IC 403 404 405 406 407		M5238FP
IC 408		TC9233F
IC 501		SC17010GF-523
IC 601		MC13309T3
IC 801		CWV1020
IC 802		LH5116HN
IC 901		PD4347A
IC 902		S-80734AN-DY-I
IC 903		TA8214K
Q 251 252 353		DTC114TK
Q 351 352 359 360		DTC114TK
Q 356 507 914		DTC124EK
Q 401 402 403 404		2SC2712
Q 405 406 601 602		DTC314TK
Q 407		DTA114EK
Q 501 502 508 511		2SC2712
Q 503 505		DTC114TK
Q 504 506		DTC114TK
Q 509 516 524		2SC2712
Q 510		2SA1162
Q 512 526 916 917		DTC124EK
Q 513		2SC2712
Q 514 520 523		DTC124EK
Q 515 911		DTC114TK
Q 517		DTA124EK
Q 518 529		2SK208
Q 521		2SJ163
Q 522		2SC2498
Q 525		2SC3295
Q 527		DTC124EK
Q 528		DTC124EK

Circuit Symbol & No.	Part Name	Part No.
Q 751 752		DTC114TK
Q 753		DTA124EK
Q 901 902		2SC2712
Q 903 908		2SD1760F5
Q 904 913		2SC2712
Q 905		UN2121
Q 906 930		2SC3295
Q 907 915 926		2SB1243
Q 909		DTC114TK
Q 912		2SB772
Q 918 919		2SB1260
Q 920 921		2SB1132
Q 922		2SA1162
Q 923		2SA1586
Q 924		DTC124EK
Q 925		DTC114EK
Q 927		2SA1179
Q 928		2SA1179
Q 929		DTC114EK
D 251 350		MA110-1A
D 351		MA110-1A
D 401 402		MA153-MC
D 403		MA8047M
D 501		MA151A-MA
D 502		MA151A-MA
D 503		MA151WK-MT
D 505		MA151WA-MN
D 506		MA151WA-MN
D 509 510		MA8027H
D 751 752 753		MA151WA-MN
D 754 755 756		MA151WK-MT
D 757		MA151WK-MT
D 801		MA8047M
D 901		ERC04-02F
D 902		MA8075H
D 903 906 907		ERA15-02VH
D 904		MA8056M
D 905		MA8082L
D 908		MA8091L
D 910 911 912 913 914		MA153-MC
D 915		MA151WK-MT
D 916		MA8082M
D 918		MA151WK-MT
D 920		MTZ6R2JB
L 501 502 901 906	Inductor	LAU2R2K
L 503	Ferri-Inductor	CTF-157
T 901		CCG1006
VR351 352	Semi-fixed 33kΩ(B)	VRTB6VS333
VR501	Semi-fixed 220kΩ(B)	VRTB6VS224
VR601	Volume 200Ω	CCS1181
BZ901	Buzzer	CPV1011
S1001	Switch(RESET)	CSG1046
IL 901	Lamp	CEL1208
IL 902	Lamp	CEL1207
X 500	Crystal Resonator	CSS1011
X 901	Ceramic Resonator	CSS1047

RESISTORS

Circuit Symbol & No.	Part Name	Part No.
R 251 252 266		RS1/10S104J
R 253 254		RS1/10S823J
R 255		RS1/10S181J
R 256		RS1/10S181J
R 257		RS1/10S334J
R 258		RS1/10S133J
R 259		RS1/10S133J
R 260		RS1/10S334J
R 261 262		RS1/10S272J
R 263 264		RS1/10S332J
R 265		RS1/10S104J
R 269 270		RS1/10S0R0J
R 555		RS1/10S222J
R 351 352 357 358		RS1/10S822J
R 353		RS1/10S183J
R 354		RS1/10S684J
R 355		RS1/10S101J
R 356 429 430 431 946		RS1/10S472J
R 359 360 407 408 409 410		RS1/10S222J
R 361 362 435		RS1/10S563J
R 363		RS1/10S223J
R 399		RS1/10S0R0J
R 401 402		RS1/10S124J
R 403 404 427 428		RS1/10S472J
R 405 406 426		RS1/10S103J
R 411 412 417 418		RS1/10S393J
R 413 414		RS1/10S561J
R 415 416 421 422		RS1/10S272J
R 419 420		RS1/10S271J
R 423 440 444 445 448 503 504 505 513 947		RS1/10S102J
R 424		RS1/10S751J
R 425		RS1/10S684J
R 432 613		RS1/10S104J
R 433 434		RS1/10S224J
R 435		RS1/10S823J
R 436		RS1/10S823J
R 437		RS1/10S153J
R 439		RS1/10S102J
R 441 902 904 949 951 953		RS1/10S223J
R 442 908		RS1/10S223J
R 443 449		RS1/8S102J
R 446 506		RS1/10S102J
R 447		RS1/10S153J
R 501 502 527 542 557		RS1/10S473J
R 507 523 528 530 545 553		RS1/10S222J
R 508 531		RS1/10S222J
R 509		RS1/10S473J
R 510 511 512		RS1/10S473J
R 514 541		RS1/10S563J
R 515 516		RS1/10S272J
R 517 518		RS1/10S334J
R 519		RS1/10S224J
R 520 965		RS1/10S223J
R 521		RS1/10S103J
R 524 529 546 977		RS1/10S472J
R 525 526		RS1/10S102J
R 532		RS1/10S333J
R 533		RS1/10S104J
R 534 543		RS1/10S103J
R 535		RS1/10S221J

Circuit Symbol & No. Part Name	Part No.
R 536	RS1/8S331J
R 537	RS1/10S182J
R 538	RS1/10S101J
R 539	RS1/10S821J
R 540	RS1/10S101J
R 544	RS1/10S223J
R 547	RS1/10S102J
R 548	RS1/10S152J
R 551 552 554	RS1/10S102J
R 556	RS1/10S474J
R 563 564 565 566	RS1/10S471J
R 567 810 968 969	RS1/10S103J
R 601 602	RS1/10S122J
R 603 604	RS1/10S332J
R 606	RS1/10S471J
R 607 608	RS1/10S471J
R 609 610 611 612	RD1/4PS4R7JL
R 751 752	RS1/10S124J
R 753 754	RS1/10S393J
R 755 756 757 758 759	RS1/10S471J
R 760 761 762 763 764	RS1/10S221J
R 765 766	RS1/10S102J
R 777 779 786	RS1/10S682J
R 778	RS1/8S682J
R 780 925 926 928 929 932 934 935 941	RS1/10S473J
R 801	RS1/10S101J
R 802	RS1/10S470J
R 901 903 974	RS1/10S473J
R 905	RS1/10S101J
R 906	RS1/8S472J
R 907 910 948 950 952	RS1/2S681J
R 909	RS1/10S102J
R 911	RS1/10S103J
R 912 913	RS1/8S473J
R 914 915	RS1/10S472J
R 916 917 918	RS1/8S472J
R 919 923	RS1/8S472J
R 920 921 922	RS1/8S472J
R 924	RS1/10S223J
R 927 972 981	RS1/10S473J
R 930 962	RS1/10S102J
R 931	RS1/10S124J
R 933	RS1/8S473J
R 936	RS1/8S473J
R 939 940	RS1/10S102J
R 942 943 1001	RS1/8S102J
R 944	RS1/10S102J
R 945	RS1/10S103J
R 954 955 956 957	RS1/10S272J
R 963 970	RS1/10S223J
R 962	RS1/10S183J
R 964	RS1/10S332J
R 966	RS1/2S681J
R 973	RS1/10S472J
R 975	RS1/10S472J
R 978	RS1/8S472J
R 980	RS1/8S473J
R 984	RS1/10S473J

CAPACITORS

Circuit Symbol & No. Part Name	Part No.
C 251 252	CCSQCH471J50
C 253 254	CEANL4R7M35LL
C 255 256 357	CEA470M16LS
C 257	CKSQYB103K25
C 258 262 369 373 802 913	CKSQYB103K25
C 259 260 517 523	CKSQYB223K25
C 261 355 356 524	CEA100M16LS2
C 351 352	CEA4R7M16LS2
C 353 354	CEA010M50LS2
C 363 914	CEA101M10L2
C 358 421 422 918	CEA010M50LS2
C 359 360	CKSYB224K25
C 361 441	CKSQYB103K50
C 362	CCSQCH330J50
C 364	CEA0R1M50L2
C 365	CEAR22M50LS2
C 401 402	CEA2R2M50LS2
C 403 404 436 437	CEA4R7M16LS2
C 405 406	CKSQYB122K50
C 407 408	CKSQYB683K25
C 409 410	CCSQSL102J50
C 411 412	CSZS4R7M6R3
C 413 414	CKSQYB104K25
C 415	CKSYB223K25
C 416	CKSQYB223K25
C 417 418	CCSQSL471J50
C 419	CCSQCH101J50
C 420	CKSQYB223K25
C 423	CCSQCH180J50
C 424	CCSQCH180J50
C 425 426 803	CEA100M16LS2
C 427 428	CEA220M16LS
C 429	CKSQYB102K50
C 430 601	CKSQYB102K50
C 431	CEA2R2M50LS2
C 432	CEA101M10LS
C 433 434	CEHAS4R7M35
C 439 440	CCSQCH220J50
C 501 502	CEA2R2M50LS2
C 504 510 516	CKSQYB103K25
C 505 509	CKSQYB103K25
C 506 4.7 μF/16V	CCH1005
C 507	CKSQYB103K25
C 508	CFTNA474J50
C 511 528 530	CCSQCH101J50
C 512	CCSQCH681J50
C 513	CKSQYB102K50
C 514 515	CCSQCH100D50
C 518	CKSQYB102K50
C 519	CKSYB223K25
C 520	CKSQYB473K16
C 521	CKSYB223K25
C 522	CKSYB223K25
C 525	CSZAR22M35
C 526	CCSQCH101J50
C 527	CEAR47M50LS2
C 529 0.047 μF/16V	CCG1008
C 531	CKSQYB102K50
C 602	CKSQYB102K50
C 603 604	CEHAS3R3M50

======Circuit Symbol & No.	Part Name=====	Part No.
C 605 606		CEA330M10L2
C 607 608 609 610		CFTNA224J50
C 611		CEHAQ221M10
C 662		CCSQCH101J50
C 664		CKSQYB473K25
C 675		CASA4R7M16
C 712		CCSQCH330J50
C 751 752		CCSQCH821J50
C 801 804		CEA100M16LS2
C 901		CEA332M16L2
C 902 905 907		CEA100M16LS2
C 903		CKSQYB103K25
C 906		CKSYF105Z25
C 908		CKSYB103K50
C 909		CKSQYB102K50
C 910 922		CKSQYB102K50
C 911		CEA2R2M50LS2
C 912		CEAR22M50L2
C 916		CEA010M50LS2
C 917	470 μF/10V	CCH1019
C 919		CEA221M10L2
C 920		CKSYB104K25
C 925		CEA472M16L2
C 927		CKSQYB103K50
C 928		CASAQ4R7M10
C 929		CKSQYB104K25

Unit Number :
Unit Name : Tuner Amp Unit(KEH-5400RDS/EW)

MISCELLANEOUS

======Circuit Symbol & No.	Part Name=====	Part No.
IC 251		MB3106M
IC 351		HA12134AF
IC 352		AN6263N
IC 401 402 409		RC4558M
IC 403 404 407		M5238FP
IC 408		TC9233F
IC 501		SC17010GF-523
IC 601		MC13309T3
IC 801		CWV1020
IC 802		LH5116HN
IC 901		PD4347A
IC 902		S-80734AN-DY
IC 903		TA8214K
Q 251 252 353		DTC114TK
Q 351 352 359 360		DTC114TK
Q 356 507 914		DTC124EK
Q 399		DTC124EK
Q 401 402 403 404		2SC2712
Q 501 502 508 511		2SC2712
Q 503 505		DTC114TK
Q 504 506		DTC114TK
Q 509 516 524		2SC2712
Q 510		2SA1162
Q 512 526		DTC124EK
Q 513		2SC2712
Q 514 520 523		DTC124EK
Q 515 911		DTC114TK
Q 517		DTA124EK
Q 518 529		2SK208
Q 521		2SJ163
Q 522		2SC2498
Q 525		2SC3295
Q 527		DTC124EK
Q 528		DTC124EK
Q 601 602		DTC314TK
Q 901 902		2SC2712
Q 903 908		2SD1760F5
Q 906 930		2SC3295
Q 907 915 926		2SB1243
Q 909		DTC114TK
Q 912		2SB772
Q 913		2SC2712
Q 922		2SA1162
Q 923		2SA1586
Q 924		DTC124EK
Q 925		DTC114EK
Q 929		DTC114EK
D 251 350		MA110-1A
D 351		MA110-1A
D 401 402		MA153-MC
D 403		MA8047M
D 501		MA151A-MA
D 502		MA151A-MA
D 503		MA151WK-MT
D 505		MA151WA-MN
D 506		MA151WA-MN
D 509 510		MA8027H
D 756		MA151WK-MT
D 801		MA8047M
D 901		ERC04-02F
D 902		MA8075H
D 903 906 907		ERA15-02VH
D 904		MA8056M
D 905		MA8082L
D 908		MA8091L
D 910 911 912 913 914		MA153-MC
D 915		MA151WK-MT
D 916		MA8082M
D 918		MA151WK-MT
D 920		MTZ6R2JB
L 501 502 901 906	Inductor	LAU2R2K
L 503	Ferri-Inductor	CTF-157
T 901		CCG1006
VR351 352	Semi-fixed 33kΩ(B)	VRTB6VS333
VR501	Semi-fixed 220kΩ(B)	VRTB6VS224
VR601	Volume 200Ω	CCS1181
S1001	Switch(RESET)	CSG1046
IL 901	Lamp	CEL1208
BZ901	Buzzer	CPV1011
X 500	Crystal Resonator	CSS1011
X 901	Ceramic Resonator	CSS1047

RESISTORS

======Circuit Symbol & No.	Part Name=====	Part No.
R 251 252 266		RS1/10S104J
R 253 254		RS1/10S823J
R 255		RS1/10S181J
R 256		RS1/10S181J
R 257		RS1/10S334J
R 258		RS1/10S133J
R 259		RS1/10S133J
R 260		RS1/10S334J
R 261 262		RS1/10S272J
R 263 264		RS1/10S332J
R 265		RS1/10S104J
R 269 270		RS1/10S222J
R 555		RS1/10S222J
R 351 352		RS1/10S822J
R 353		RS1/10S183J
R 354		RS1/10S684J
R 355		RS1/10S101J
R 356 429 430 431 946		RS1/10S472J
R 357 358		RS1/10S822J
R 359 360 407 408 409 410		RS1/10S222J
R 361 362		RS1/10S563J
R 363		RS1/10S223J
R 401 402		RS1/10S124J
R 403 404 427 428		RS1/10S472J
R 405 406 426 810		RS1/10S103J
R 411 412 417 418		RS1/10S393J
R 413 414		RS1/10S561J
R 415 416 421 422		RS1/10S272J
R 419 420		RS1/10S271J
R 423 445 503 504 505 513 947		RS1/10S102J
R 424		RS1/10S751J
R 425		RS1/10S684J
R 432 613		RS1/10S104J
R 446 506		RS1/10S102J
R 451		RS1/10S0R0J
R 452		RS1/10S0R0J
R 501 502 527 542 557		RS1/10S473J
R 507 523 528 530 545 553		RS1/10S222J
R 508 531		RS1/10S222J
R 509		RS1/10S473J
R 510 511 512		RS1/10S473J
R 514 541		RS1/10S563J
R 515 516		RS1/10S272J
R 517 518		RS1/10S334J
R 519		RS1/10S224J
R 520 965		RS1/10S223J
R 521		RS1/10S103J
R 524 529 546		RS1/10S472J
R 525 526		RS1/10S102J
R 532		RS1/10S333J
R 533		RS1/10S104J
R 534 543		RS1/10S103J
R 535		RS1/10S221J
R 536		RS1/8S331J
R 537		RS1/10S182J

======Circuit Symbol & No.	Part Name=====	Part No.
R 538 540		RS1/10S101J
R 539		RS1/10S821J
R 544		RS1/10S223J
R 547 551 552 554		RS1/10S102J
R 548		RS1/10S152J
R 556		RS1/10S474J
R 563 564 565 566		RS1/10S471J
R 567 968 969		RS1/10S103J
R 601 602		RS1/10S122J
R 603 604		RS1/10S332J
R 606 607 608 755 756 757 758 759		RS1/10S471J
R 609 610 611 612		RD1/4PS4R7JL
R 777 779 786		RS1/10S682J
R 778		RS1/8S682J
R 780		RS1/10S473J
R 801		RS1/10S101J
R 802		RS1/10S470J
R 901 903 938		RS1/10S473J
R 902 904 949		RS1/10S223J
R 905		RS1/10S101J
R 906		RS1/8S472J
R 907 910 948		RS1/2S681J
R 908		RS1/10S223J
R 909		RS1/10S102J
R 911		RS1/10S103J
R 912 913		RS1/8S473J
R 914 915 977		RS1/10S472J
R 916 917 918		RS1/8S472J
R 919 923		RS1/8S472J
R 920 921 922		RS1/8S472J
R 924		RS1/10S223J
R 925 926 928 929 932 934 937 941		RS1/10S473J
R 927 981		RS1/10S473J
R 930		RS1/10S102J
R 931		RS1/10S124J
R 933		RS1/8S473J
R 939 940		RS1/10S102J
R 942 943 1001		RS1/8S102J
R 944		RS1/10S102J
R 945		RS1/10S103J
R 958 960		RS1/10S0R0J
R 962		RS1/10S182J
R 963		RS1/10S223J
R 964		RS1/10S332J
R 966		RS1/2S681J
R 976		RS1/10S0R0J
R 978		RS1/8S472J
R 980		RS1/8S473J
R 984		RS1/10S473J

CAPACITORS

======Circuit Symbol & No.	Part Name=====	Part No.
C 251 252		CCSQCH471J50
C 253 254		CEANL4R7M35LL
C 255 256 357		CEA470M16LS
C 257		CKSQYB103K25
C 258 262 369 373 802 913		CKSQYB103K25

======Circuit Symbol & No.	Part Name=====	Part No.
C 259 260 517 523		CKSQYB223K25
C 261 355 356 524		CEA100M16LS2
C 351 352		CEA4R7M16LS2
C 353 354		CEA010M50LS2
C 363 914		CEA101M10LS2
C 358 918		CEA010M50LS2
C 359 360		CKSYB224K25
C 361 441		CKSQYB103K50
C 362		CCSQCH330J50
C 364		CEA0R1M50L2
C 365		CEAR22M50LS2
C 401 402		CEA2R2M50LS2
C 403 404 436 437		CEA4R7M16LS2
C 405 406		CKSQYB122K50
C 407 408		CKSQYB683K25
C 409 410		CCSQSL102J50
C 411 412		CSZS4R7M6R3
C 413 414		CKSQYB104K25
C 415		CKSYB223K25
C 416		CKSQYB223K25
C 417 418		CCSQSL471J50
C 419		CCSQCH101J50
C 420		CKSQYB223K25
C 431		CEA2R2M50LS2
C 432		CEA101M10LS
C 433 434		CEHAS4R7M35
C 439 440		CCSQCH220J50
C 501 502		CEA2R2M50LS2
C 504 510 516		CKSQYB103K25
C 505 509		CKSQYB103K25
C 506	4.7 μF/16V	CCH1005
C 507		CKSQYB103K25
C 508		CFTNA474J50
C 511 528 530		CCSQCH101J50
C 512		CCSQCH681J50
C 513		CKSQYB102K50
C 514 515		CCSQCH100D50
C 518		CKSQYB102K50
C 519		CKSYB223K25
C 520		CKSQYB473K16
C 521		CKSYB223K25
C 522		CKSYB223K25
C 525		CSZAR22M35
C 526		CCSQCH101J50
C 527		CEAR47M50LS2
C 529	0.047 μF/16V	CCG1008
C 531		CKSQYB102K50
C 601		CKSQYB102K50
C 602		CKSQYB102K50
C 603 604		CEHAS3R3M50
C 605 606		CEA330M10L2
C 607 608 609 610		CFTNA224J50
C 611		CEHAQ221M10
C 662		CCSQCH101J50
C 664		CKSQYB473K25
C 675		CASA4R7M16
C 712		CCSQCH330J50
C 801 804		CEA100M16LS2
C 803		CEA100M16LS2
C 901		CEA332M16L2

======Circuit Symbol & No.	Part Name=====	Part No.
C 902 905 907		CEA100M16LS2
C 903		CKSQYB103K25
C 906		CKSYF105Z25
C 908		CKSYB103K50
C 909		CKSQYB102K50
C 910		CKSQYB102K50
C 911		CEA2R2M50LS2
C 912		CEAR22M50L2
C 916		CEA010M50LS2
C 917	470 μF/10V	CCH1019
C 919		CEA221M10L2
C 920		CKSYB104K25
C 925		CEA472M16L2
C 927		CKSQYB103K50
C 928		CASAQ4R7M10
C 929		CKSQYB104K25

Unit Number :
Unit Name : P.C.Board(A)

======Circuit Symbol & No.	Part Name=====	Part No.
S 2	Switch(FWD/REV)	ESH1003
D 1	(KEH-M7400RDS/EW)	F1SR-35-100A
D 1	(KEH-5400RDS/EW,KEH-5401/EW,KEH-5401/IT)	1SR-35-100A

Unit Number :
Unit Name : P.C.Board(B)

======Circuit Symbol & No.	Part Name=====	Part No.
S 3	Switch(TAPE/TUN)	ESH1004

Miscellaneous Parts List

======Circuit Symbol & No.	Part Name=====	Part No.
S 1	Switch(MUTE)	ESN1005
M 1	Motor Unit	EXA1162
HD 1	Head Unit	EXA1163
SO 1	(KEH-M7400RDS/EW) Solenoid	EXP1008
SO 1	(KEH-5400RDS/EW,KEH-5401/EW,KEH-5401/IT)	EXP1010

• The KEH-5400RDS/EW, KEH-5401RDS/EW, KEH-5401RDS/IT Parts Lists enumerate the parts which differ from those enumerated in the KEH-M7400RDS/EW Parts List only.
The parts other than those enumerated in the former are indentical with those in the latter, to which you are requested to refer, accordingly.
The KEH-M7400RDS/EW Parts List is given on page 72.

Key Board Unit

Circuit Symbol &No.	KEH-M7400RDS/EW Part No.	KEH-5400RDS/EW Part No.	KEH-5401RDS/EW Part No.	KEH-5401RDS/IT Part No.
IL 101 102	CEL1116	· · · · ·	· · · · ·	CEL1116
IL 103 104	CEL1137	CEL1137	CEL1137	· · · · ·
IL 105 106 107	CEL1207	· · · · ·	· · · · ·	CEL1207
IL 108 109	CEL1207	· · · · ·	· · · · ·	CEL1207
IL 110 111	CEL1208	CEL1208	CEL1208	· · · · ·
IL 112 113	CEL1208	CEL1208	CEL1208	· · · · ·

Tuner Amp Unit

Circuit Symbol &No.	KEH-5400RDS/EW Part No.	KEH-5401RDS/EW Part No.	KEH-5401RDS/IT Part No.
C 421 422	· · · · ·	CEA010M50LS2	CEA010M50LS2
C 423	· · · · ·	CCSQCH180J50	CCSQCH180J50
C 424	· · · · ·	CCSQCH180J50	CCSQCH180J50
C 425 426	· · · · ·	CEA100M16LS2	CEA100M16LS2
C 427 428	· · · · ·	CEA220M16LS	CEA220M16LS
C 429	· · · · ·	CKSQYB102K50	CKSQYB102K50
C 430	· · · · ·	CKSQYB102K50	CKSQYB102K50
Q 405 406	· · · · ·	DTC314TK	DTC314TK
Q 407	· · · · ·	DTA114EK	DTA114EK
IC405 406	· · · · ·	M5238FP	M5238FP
IC410	· · · · ·	RC4558M	RC4558M
R 433 434	· · · · ·	RS1/10S224J	RS1/10S224J
R 435	· · · · ·	RS1/10S823J	RS1/10S823J
R 436	· · · · ·	RS1/10S823J	RS1/10S823J
R 437	· · · · ·	RS1/10S153J	RS1/10S153J
R 439	· · · · ·	RS1/10S102J	RS1/10S102J
R 440 444 448	· · · · ·	RS1/10S102J	RS1/10S102J
R 441	· · · · ·	RS1/10S223J	RS1/10S223J
R 442	· · · · ·	RS1/10S223J	RS1/10S223J
R 443 449	· · · · ·	RS1/8S102J	RS1/8S102J
R 447	· · · · ·	RS1/10S153J	RS1/10S153J
R 451	RS1/10S0R0J	· · · · ·	· · · · ·
R 452	RS1/10S0R0J	· · · · ·	· · · · ·
R 614 615 616	· · · · ·	RS1/10S0R0J	RS1/10S0R0J
R 617	· · · · ·	RS1/10S0R0J	RS1/10S0R0J
R 938	RS1/10S473J	· · · · ·	· · · · ·
R 935	· · · · ·	RS1/10S473J	RS1/10S473J
R 958 960	RS1/10S0R0J	RS1/10S0R0J	· · · · ·
R 959 961	· · · · ·	· · · · ·	RS1/10S0R0J
R 976	RS1/10S0R0J	RS1/10S0R0J	· · · · ·
R 982	· · · · ·	· · · · ·	RS1/10S0R0J
VR601	CCS1181	· · · · ·	· · · · ·
IL 901	CEL1208	CEL1208	· · · · ·
IL 902	· · · · ·	· · · · ·	CEL1207

ADDITIONAL

Service Manual

PIONEER
The Art of Entertainment

ORDER NO.
CRT1428

CASSETTE MECHANISM ASSEMBLY

CX-197

NOTE
- This service manual describes operation of the cassette mechanism incorporated in models listed in the table below.
- When performing repairs use this manual together with the specific manual for the model under repair.
- CX197 (CRT1328) does not have a Key-off function, but the key-off function is shown in this service manual of the CX-197 (CRT1428).

Model	Service Manual	Cassette Mechanism Assembly
KEH-M7400RDS/EW	CRT1429	EXK1735

Model	Service Manual	Cassette Mechanism Assembly

PIONEER ELECTRONIC CORPORATION . 4-1, Meguro 1-Chome, Meguro-ku, Tokyo 153, Japan
PIONEER ELECTRONICS SERVICE INC. P.O. Box 1760, Long Beach, California 90801 U.S.A.
PIONEER ELECTRONICS OF CANADA, INC. 505 Cochrane Drive, Markham, Ontario L3R 8E3 Canada
PIONEER ELECTRONIC [EUROPE] N.V. Haven 1087 Keetberglaan 1, 9120 Melsele, Belgium
PIONEER ELECTRONICS AUSTRALIA PTY. LTD. 178-184 Boundary Road, Braeside, Victoria 3195, Australia TEL: [03] 580-9911
© PIONEER ELECTRONIC CORPORATION 1991
FU DEC. 1991 Printed in Japan

1. DISASSEMBLY

Note: Always use new washer and E washer at the time of reassembling.

● How to Remove the Belt and Motor

1. Remove screw A fixing the FR lever. (Fig.1)
2. Remove three screws B fixing the sub-chassis unit. Move the unit first in Direction A, then in B direction, and lift it upward for removal. (Fig.2)
3. The belt can now be removed. (Fig.3)
4. Remove two screws C. The motor can be removed. (Fig.3)

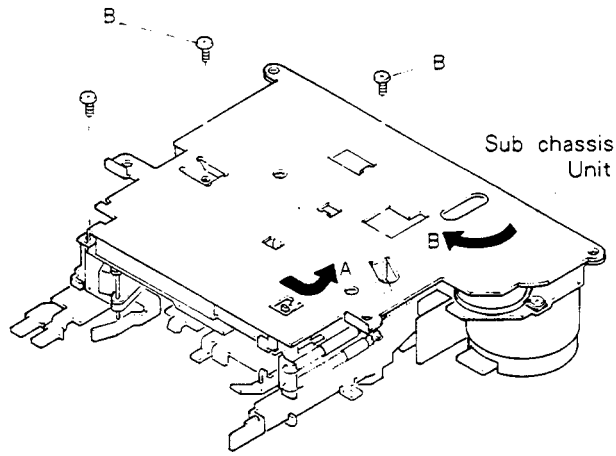

Fig. 2

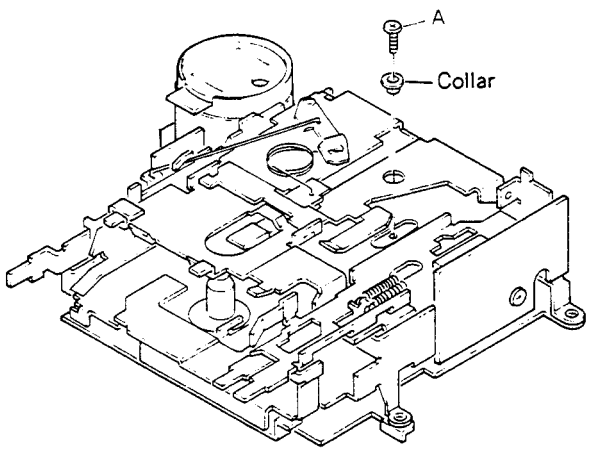

Fig. 1

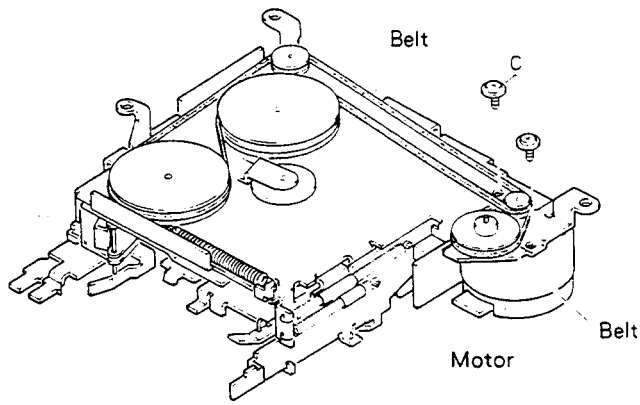

Fig. 3

● How to Remove the Pinch Roller Unit and Head

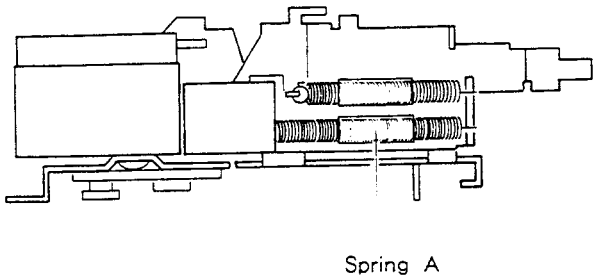

Fig. 4

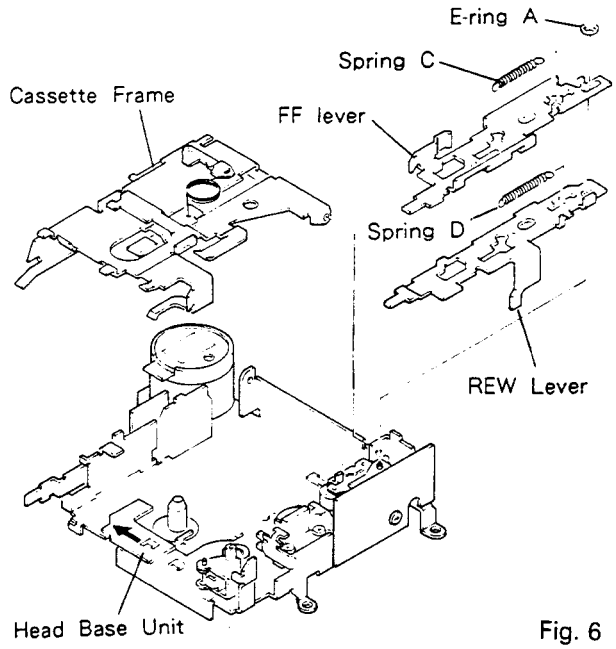

Fig. 6

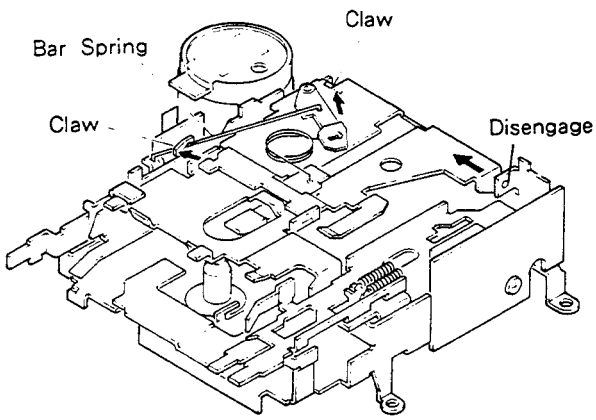

Fig. 5

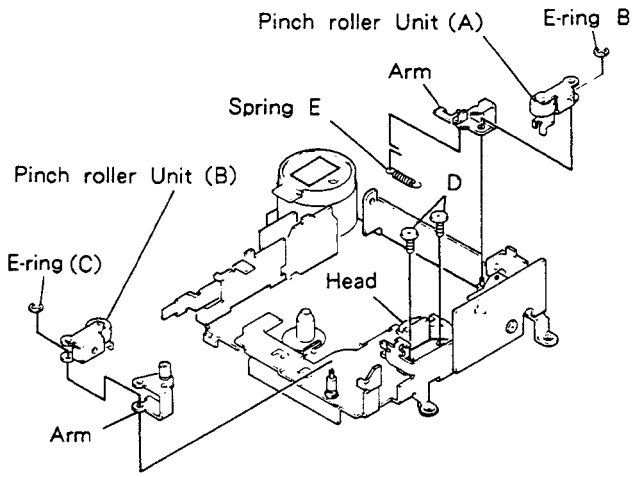

Fig. 7

1. Remove spring A. (Fig.4)
2. Extend claws (2 points). (Fig.5)
3. Remove bar Spring. (Fig.5)
4. Disengage projection by moving in a direction of arrow mark. (Fig.5)
5. The cassette frame is removed. (Fig.6)
6. Remove springs C and D. (Fig.6)
7. Remove E-ring A. (Fig.6)
8. Remove FF/REW levers. (Fig.6)
9. Move head base unit forward. (Fig.6)
10. Remove spring E. (Fig.7)
11. Remove E-ring B. The pinch roller unit (A) can be removed. (Fig.7)
12. Remove E-ring C. The pinch roller unit (B) can be removed. (Fig.7)
13. Remove two screws D. The head can be removed. (Fig.7)

2. ADJUSTMENT

2.1 CHECK POINTS OF CASSETTE MECHANISM

Confirm the following items when replacing parts of the cassette mechanism.	■ Tape speed deviation: $3{,}000^{+90}_{-30}$ Hz (4.76cm/s $^{+3}_{-1}$ %) Using an NCT-111, measure the speed at the start and end of winding and take the maximum value. If values indicated by the pointer vary considerably, adjust to 70% of the minimun and maximum values. Measuring time shall be 5 — 6 seconds.	■ Wow and flutter: Less than 0.2% (WRMS) Using an NCT-111, measure the wow and flutter at the start and end of winding and take the maximum value. If values indicated by the pointer vary considerably, adjust to 70% of the minimum and maximum values. Measuring time shall be 5 — 6 seconds.
■ Fast forward and rewinding time: 100 — 120 seconds Using a C-60, set to fast forward and rewind, and measure the time with a stop watch.	■ Winding torque: 35 — 65g • cm Using a cassette type torque meter (100 g•cm), measure the minimum value while in the play mode. Measuring time shall be 2.5 — 6 seconds.	■ F.F. torque: 70 — 120g • cm Using a cassette type torque meter (120 g•cm), measure the value when the tape stops in the F.F. mode.
■ REW torque: 70 — 120g • cm Using a cassette type torque meter (120 g•cm), measure the value when the tape stops in the REW mode.	■ Back tension torque: 2 — 6g • cm After setting in the REW mode without loading a cassette tape for 5 minutes, measure the back tension torque in the play mode, using a cassette type torque meter.	■ Cassette loading force: Less than 0.7 kg Push the center of the cassette and measure the force with a tension meter (3 kg).

2.2 AZIMUTH ADJUSTMENT

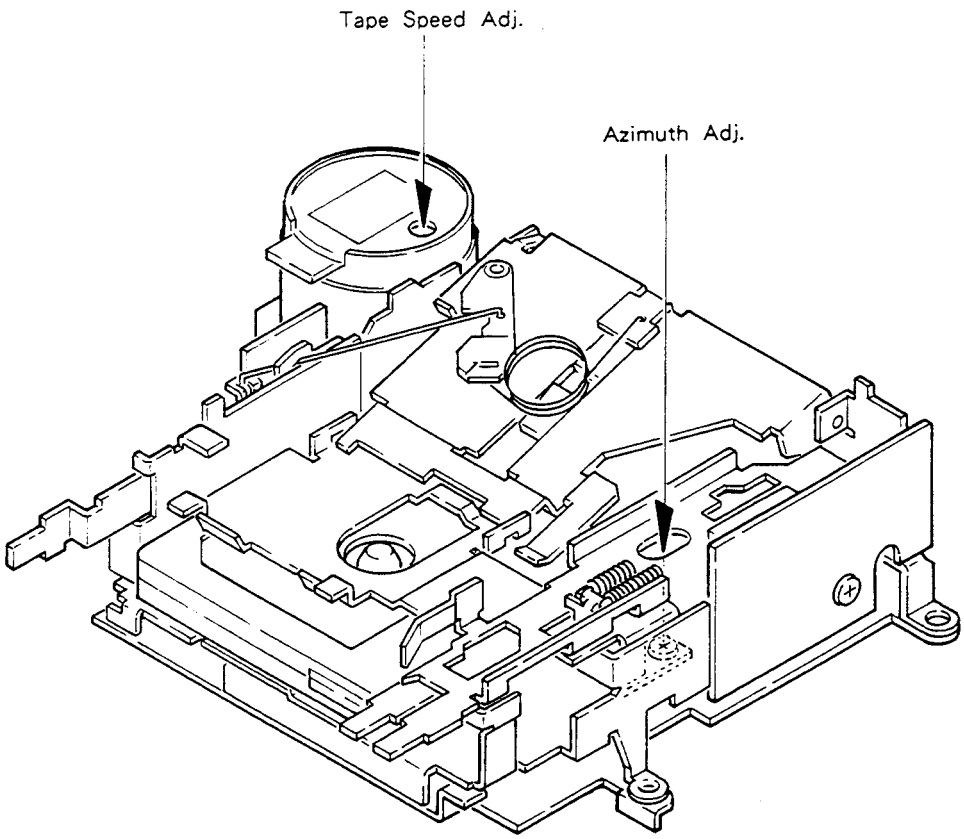

Fig. 8

● To Adjust (EXK1750)

1. Play "A" side of NCT-110 (10kHz, – 10dB). Adjust the screw for maximum output in forward and reverse directions.
2. Play "B" side in forward and reverse directions to confirm adjustment.

2.3 TAPE SPEED ADJUSTMENT

1. Reproduce NCT-111 (3kHz, – 10dB). Adjust the semifixed resistor so that frequency counter shows 3010Hz (+80Hz, – 40Hz).

3. MECHANISM DESCRIPTION

● Loading operation

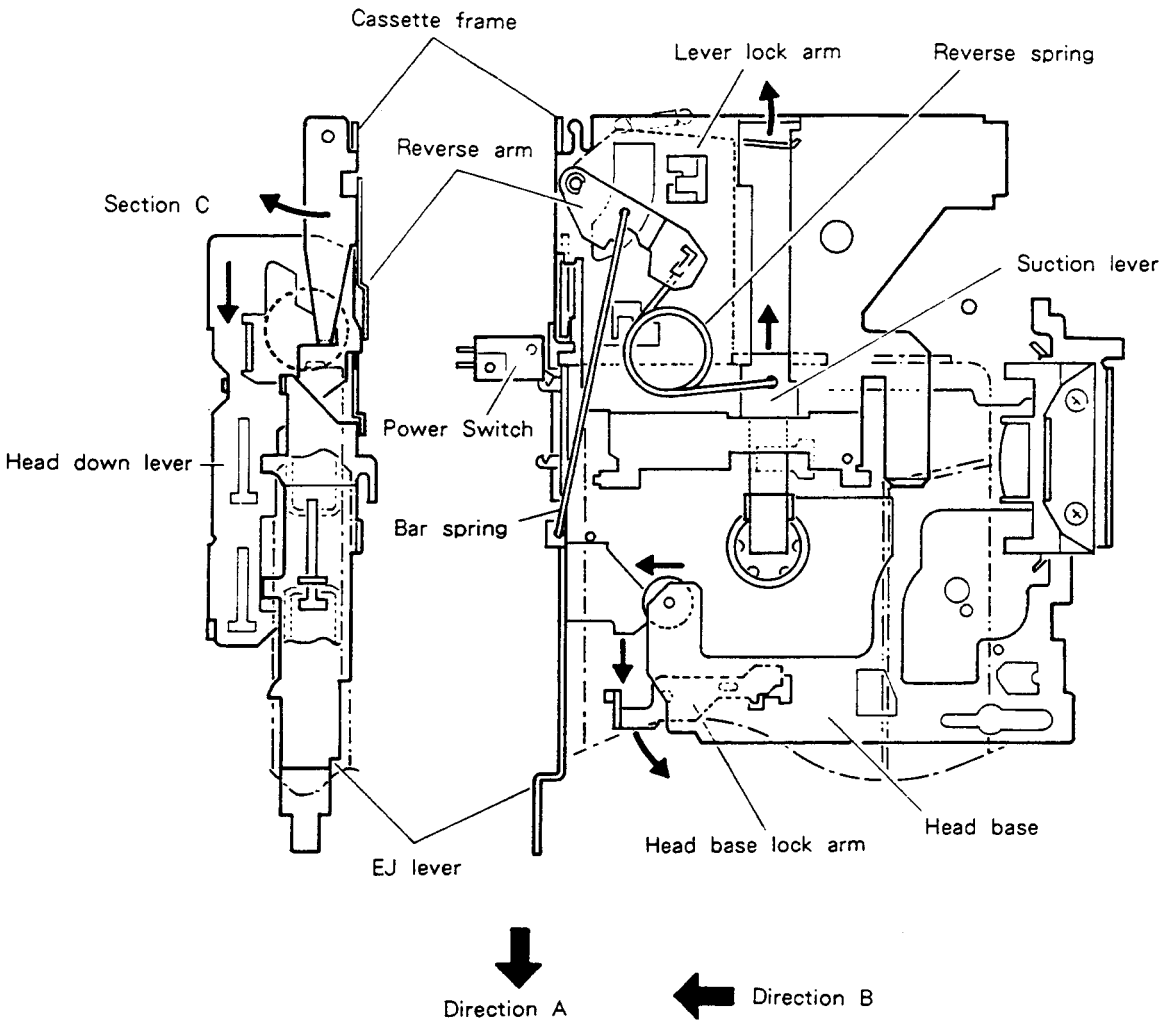

Fig. 9

1. A cassette tape, when inserted, pushes a suction lever.
   The reverse spring rotates to move past the reverse point. Then, the cassette is drawn by a force of a reverse spring (suction operation).
2. After suction, the lever lock arm is pressed to be unlocked.
3. The head down lever is unlocked and the lever moves in Direction A.
4. While moving, the EJ lever turns ON the power switch.
5. The cassette frame engaged to the section C of the head down lever turns. (Cassette drop operation)
6. At the stroke end, the head down lever turns the head base lock arm.
7. A Stopper of the head base lock arm is released, and the head base moves forward (Direction B).

● MS Operation

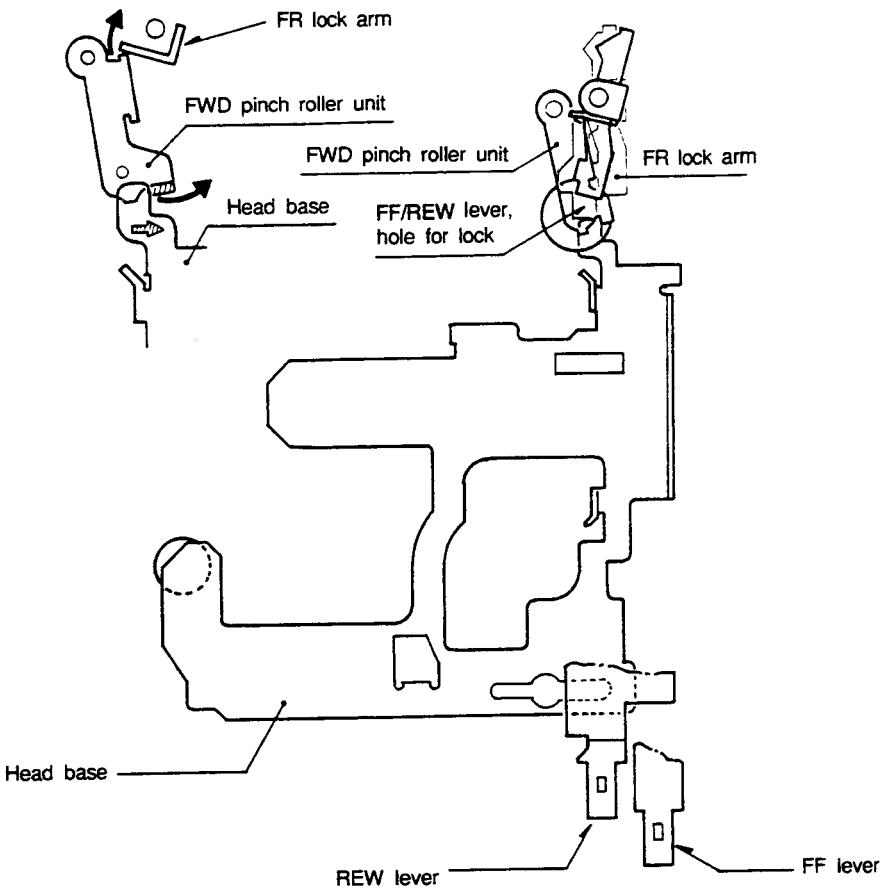

Fig. 10

The head base is moved back by switching the key-off solenoid off from the REW or FF condition, and is lowered (rotated) FWD pinch roller unit. The FWD pinch roller unit presses the bending part of FR lock arm to make it rotate in the direction that releases the lock. The lock of the FF/REW lever is consequently released.
Subsequently, the head comes out from the ATSC to enable PLAY condition.

● Direction Changeover Operation

(1) FWD play operation

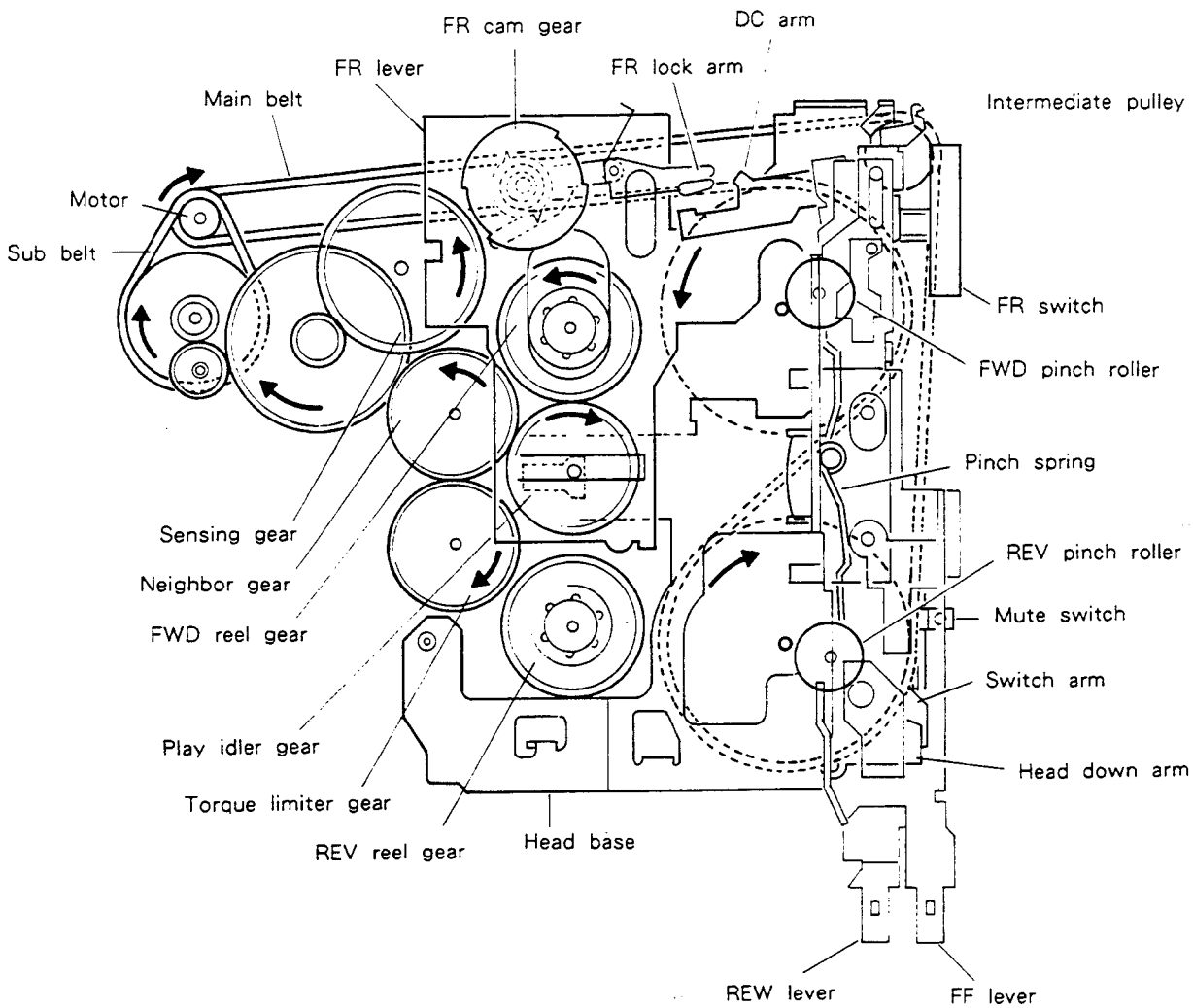

Fig. 11

When the FR lever is in the top position, the pinch spring is in the upper position to press the FWD pinch roller. The FR switch also moves upward and its reaction causes downward force on the FR lever. The spring attached to the FR lever applies upward force to the play idler gear from above to engage it with the neighbor gear and FWD reel gear.

The tape is driven in the FWD direction by a running motor and taken up by the REV reel gear via the torque limiter gear.

(2) Direction change operation

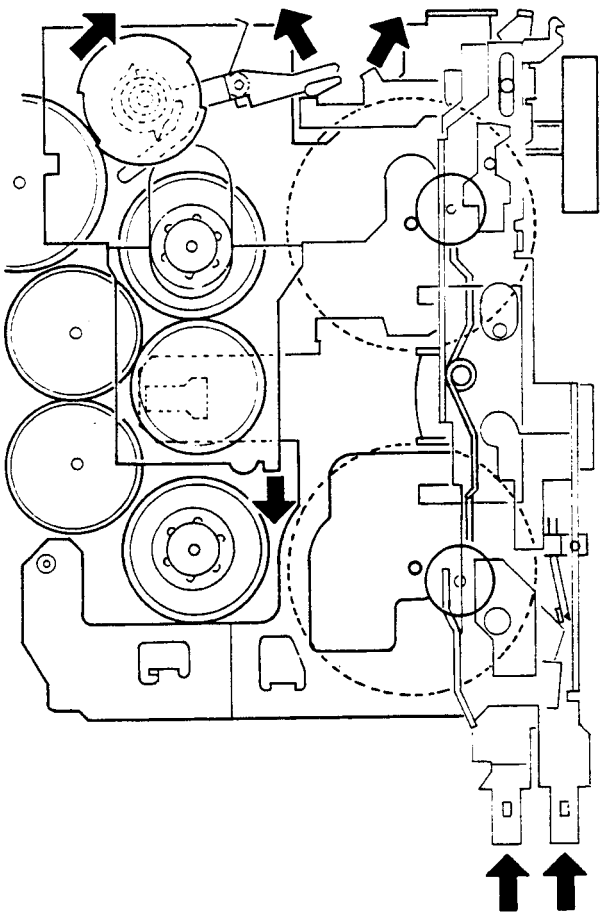

Fig. 12

The direction is changed by pressing FF and REW levers simultaneously. The DC arm turns along a cam groove of FF and REW levers to turn the FR lock arm. As the FR lever applies force from above downward, the FR cam gear turns and the notch meshes with the sensing gear.
As a result, the FR lever moves downward.
When FF and REW levers are kept pressed, the lock arm contacts the outside of the FR cam gear to prevent changeover between FWD and REV. Pressing FF and REW levers also cause the mute switch to be turned ON. In other words, muting is valid while FF and REW levers are pressed. (Fig.12)

(3) REV play operation

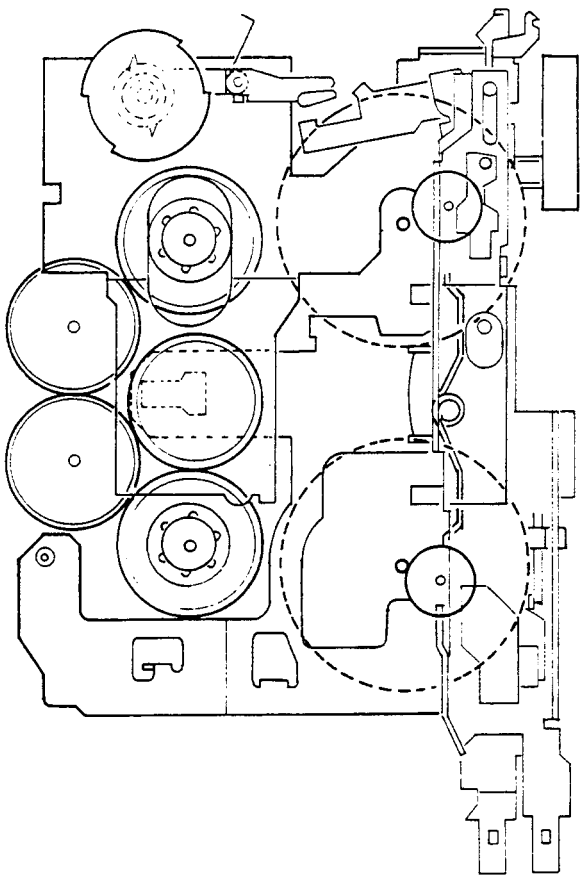

Fig. 13

Moving the NR lever up and down causes changeover among the pinch roller, FR switch, and play idler gear. With FF and REW levers having been returned, the FR lock arm returns to the normal lock position and locks the gear when the FR gear completes an one-half turn. The mute arm also returns to turn OFF the mute switch. The reverse play state is thus obtained. (The same applies to changeover from REV to FWD.)

● FF/REW Operation

(1) FWD play operation

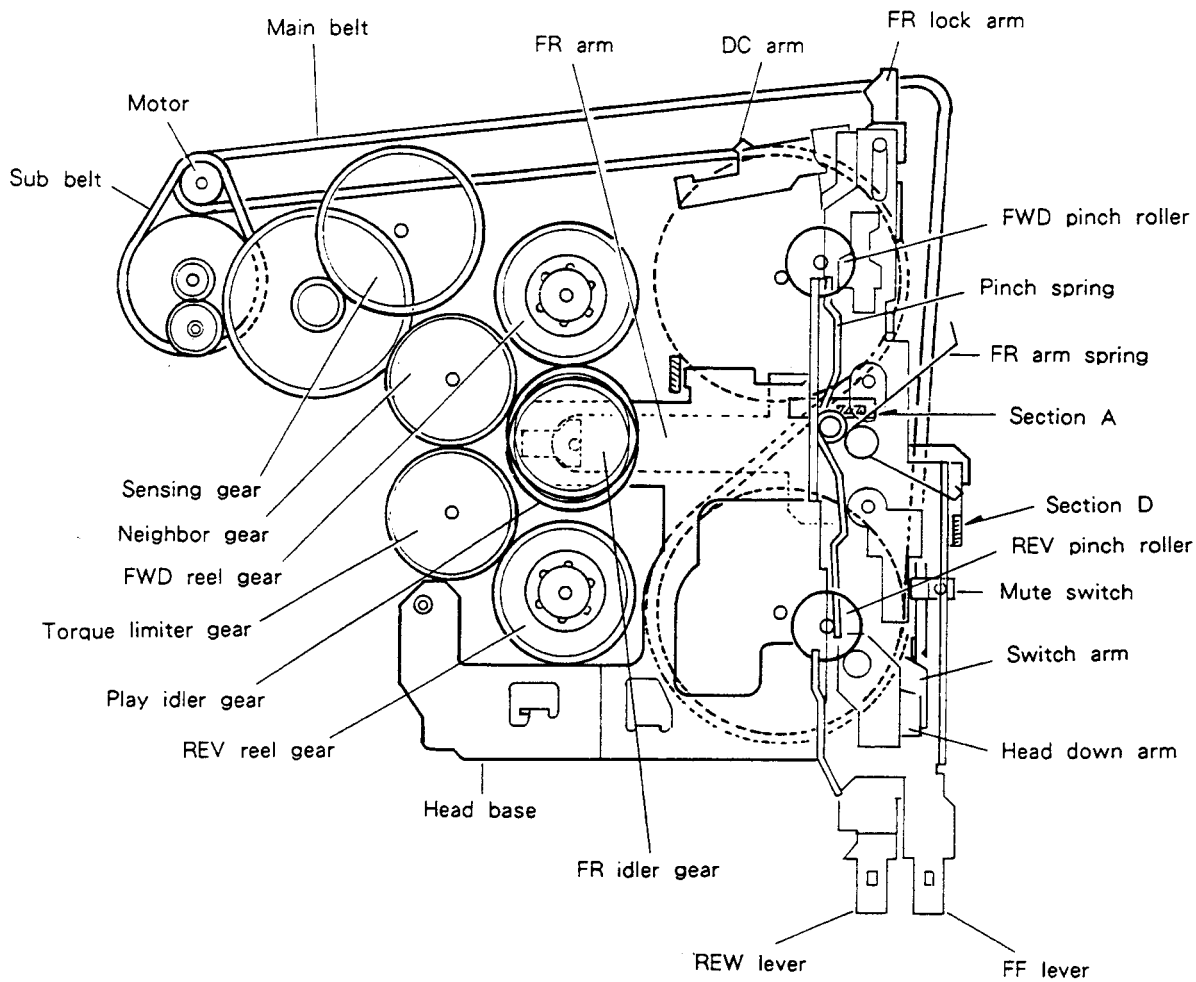

Fig. 14

In the FWD (REV) play state, the head base is fixed by a chassis stopper. The pinch spring presses the pinch roller into contact with a capstan to drive forward the tape. The REV reel gear takes up the tape via the torque limiter gear. In this case, the FR idler gear on the FR arm is centered by Section A of the head base and thus not rotating.

(2) FF Operation

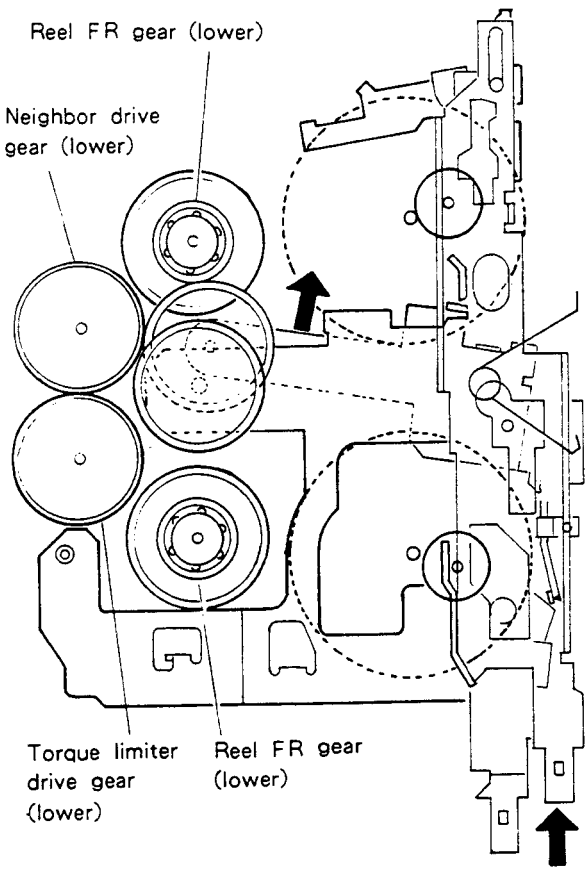

Fig. 15

FF operation is obtained by pressing and locking the FF lever. As the FF lever is pressed, the switch arm turns to turn ON the mute switch. The head base is moved backward along the FF lever cam groove.

As the head base moves backward to release the pinch roller from the capstan, the play idler gear is simultaneously disengaged from the reel gear. As the head base moves backward, the FR arm centered by Section A is put into rotation by the FR arm spring to engage with the FWD side FR gear.

The FF lever is locked by the FR lock arm and performs the FF operation. (Fig.15)

(3) REW operation

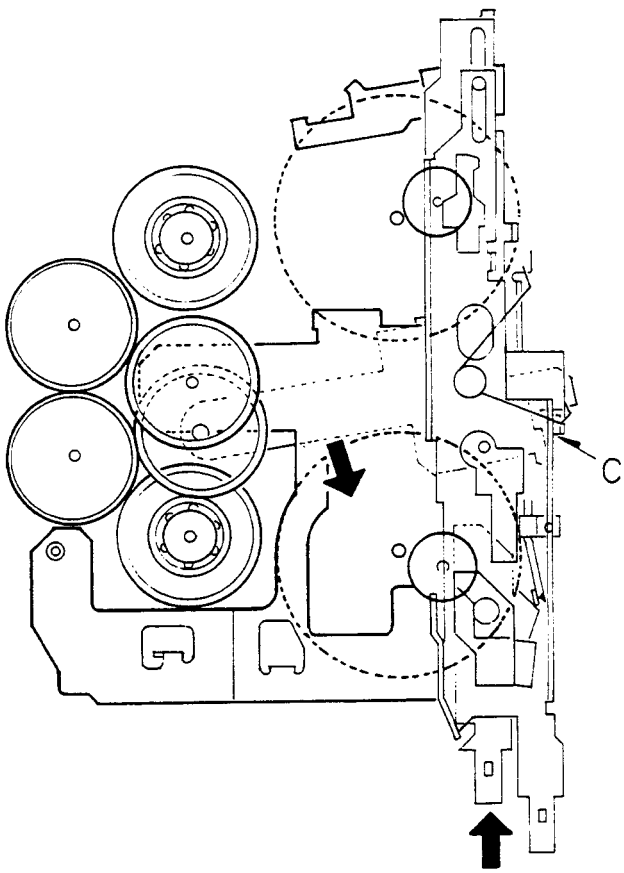

Fig. 16

Similar to the case of FF operation, pressing the REW lever causes the mute switch to be turned ON.

Simultaneously with release of the pinch roller from the capstan, the play idler gear is disengaged from the reel gear.

Section D of the REW lever presses a movable side of the FR arm spring, thereby engaging the FR gear to the FR gear on the REV side.

The REW lever is locked by the lock arm, performing the REW operation. This operation is cancelled when Section C is turned by the lever return spring. (Fig.16)

● Sensing Operation

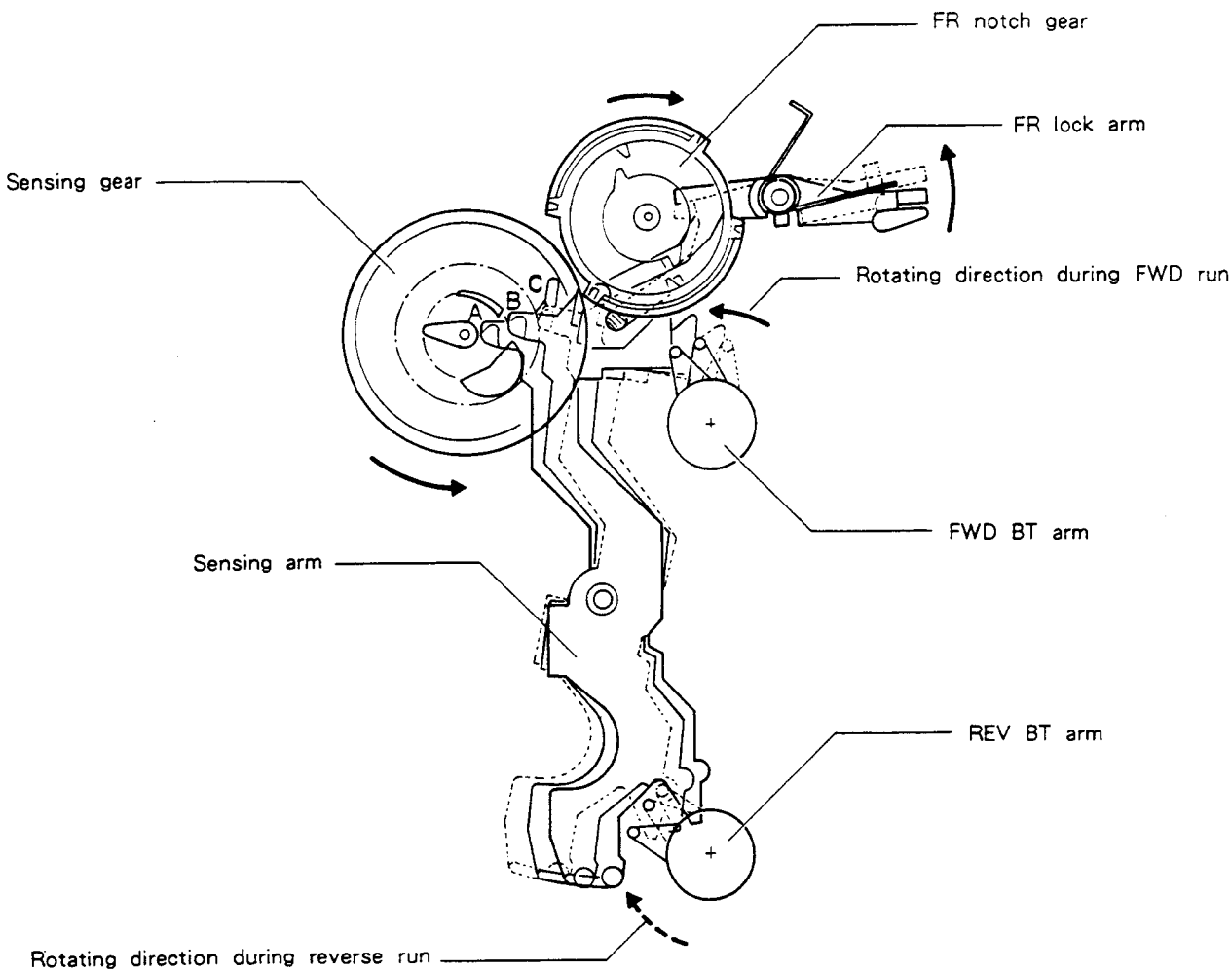

Fig. 17

1. During tape run: The sensing arm keeps oscillation between A and B under a force of the FWD BT arm (or REV BT arm).

2. At end of tape: The force of the BT arm is lost. The sensing arm stops at Position B, then pushed out to Position C by a crescent cam of the sensing gear.

3. Change of run direction:
The FR lock arm turns counter-clockwise along with movement of the sensing arm. The FR notch gear is unlocked and begins to turn.

● ATSC Opeeration

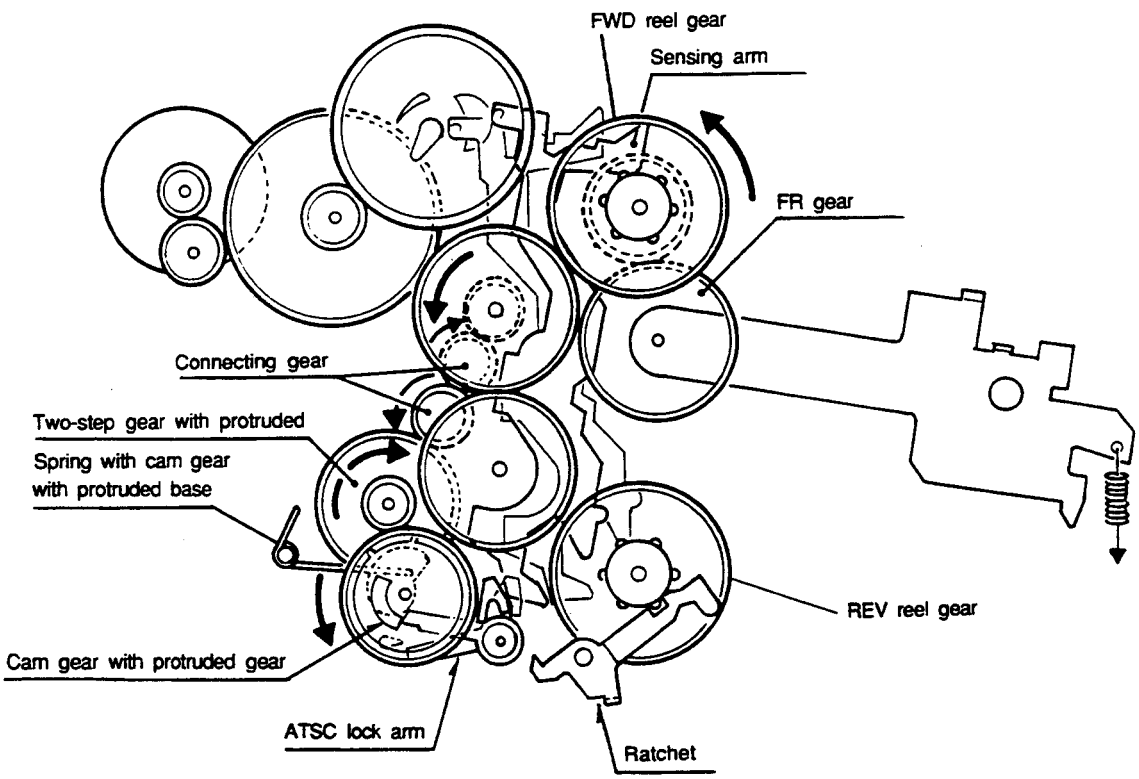

Fig. 18

1. At the position for releasing the head table, the FR gear is meshed with the FWD reel gear. Because the ratchet in the REV reel gear stops rotating, the tape must be wound up until no slack exist.

2. Because the rotation stops when no slack exists in the tape, sensing is performed. The sensing arm presses the ATSC lock arm, and the lock of the cam gear with protruded head gets out of position. Then, the cam gear is made to rotate.

● Key-off Operation

Release Condtion

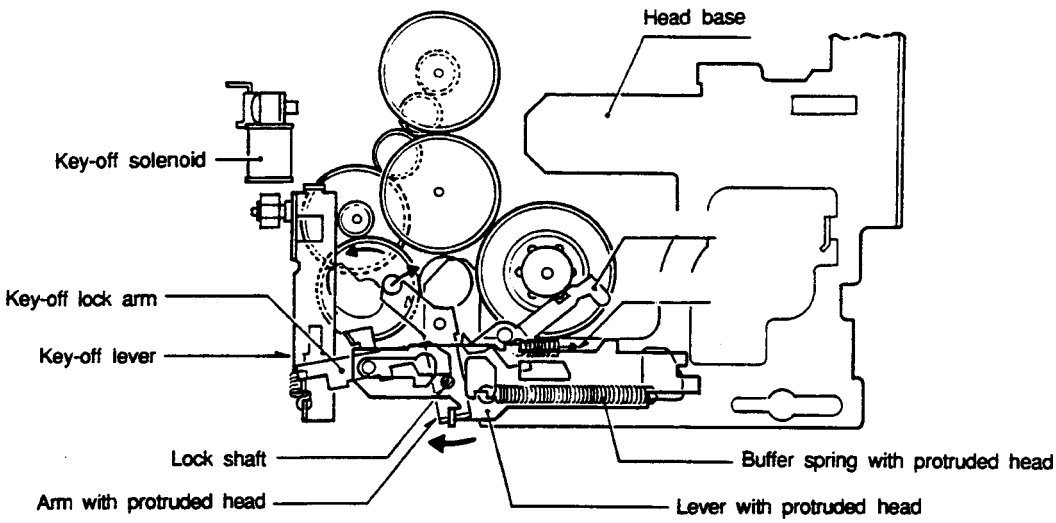

Play Condition

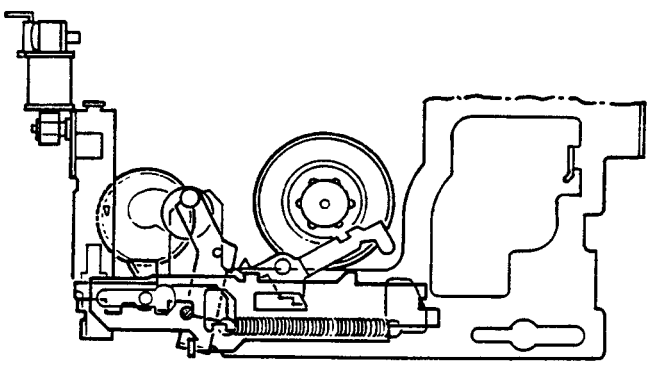

Fig. 19

1. Thrusting head: The arm with protruded head is rotated by the rotation of the cam gear with protruded head, and the lever with protruded head is pushed out. Because the lever with the protruded head and head base are connected by the buffer spring with protruded head, the head base moves forward.

2. Lock for head base:
When the lever with protruded head moves forward, the lock shaft caulked by the lever with protruded head shifts. Thus, the key-off lock arm can rotate, and the key-off lever reaches the key-off solenoid by force of a spring, and becomes attached. (Although escape power works on the key-off lock arm by force of the head return spring, the solenoid maintains it.)

3. Key-off: The key-off lock arm is rotated by the power of the head return spring when the key-off solenoid is switched off, and the lever with protruded head and head base move back together.

● EJECT Operation

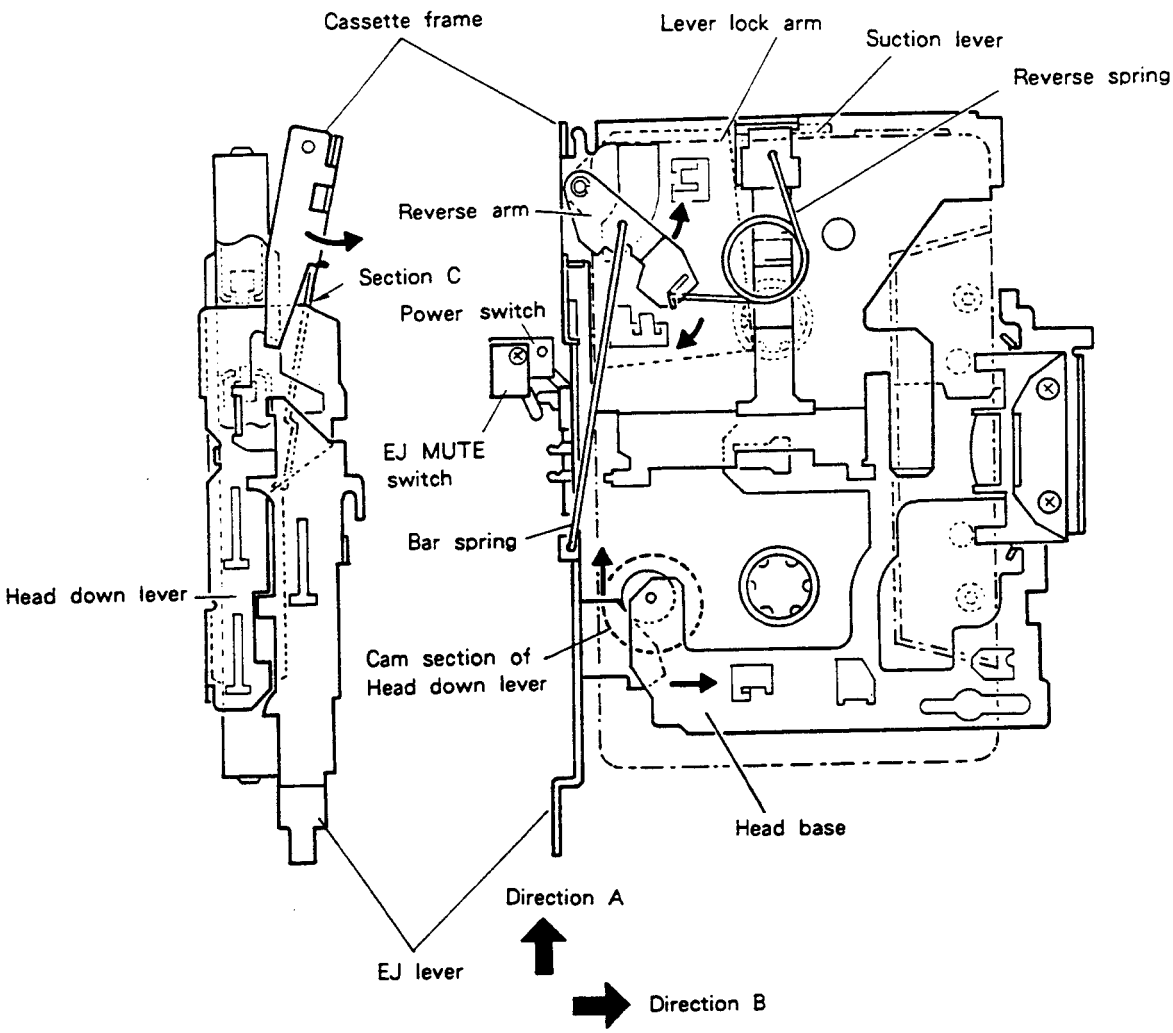

Fig. 20

1. Push the EJ lever in Direction A by hand (EJ MUTE SW ON) At the same time, the head down lever slides in Direction A.
2. The cam section of the head down lever returns the head base in Direction B (head base down operation).
3. Section C of the cassette frame is pushed up by the stroke of the head down lever (push-up operation).
4. The reverse arm is driven in a direction of arrow mark via bar spring by the EJ lever stroke.
5. The reverse spring passes through the reverse position to eject the cassette tape (eject operation).
6. With the EJ lever over-stroking, the lever lock arm can be rotated and locks the head down lever.
7. When released, the EJ lever returns and is stopped by the head down lever.

PIONEER
The Art of Entertainment

Service Manual

ORDER NO.
CRT1328

CASSETTE MECHANISM ASSEMBLY

CX-197

NOTE

- **This service manual describes operation of the cassette mechanism incorporated in models listed in the table below.**
- **When performing repairs use this manual together with the specific manual for the model under repair.**

Model	Service Manual	Cassette Mechanism Assembly
KE-1700B/IT KE-1700SDK/WG KE-1730B/EW KE-2700B/IT KE-2700SDK/WG KE-2730B/EW	CRT1325	EXK1710
KE-1700QR/UC KE-2303QR/UC KE-2750QR/ES	CRT1327	EXK1710
KE-2033/UC KE-2033/XSG/UC KE-2828/XSG/UC KE-2828/ES, UC	CRT1331	EXK1710
KE-3838/UC, ES KE-3838/XSG/UC KE-3838/XML/UC	CRT1332	EXK1710
KE-1700B/XML/IT	CRT1336	EXK1710
KE-1730B/XIB KE-1730B/XML/EW KE-1730B/XSG/EW	CRT1337	EXK1710
KE-2630B/XIB KE-2730B/XIB	CRT1340	EXK1710

Model	Service Manual	Cassette Mechanism Assembly
KE-1700QR/XML/UC	CRT1339	EXK1710
KE-3700SDK/WG KE-3730B/EW KE-3700B/IT	CRT1326	EXK1720
KE-2700QR/UC KE-3700QR/UC KE-3750QR/ES	CRT1327	EXK1720
KE-4848/ES, UC KE-4848/XML/UC KE-4848/XSG/UC	CRT1330	EXK1720
KE-250/US KE-3033/UC KE-3033/XSG/UC	CRT1332	EXK1720
KE-3730B/XIB	CRT1338	EXK1720
KE-450QR/US	CRT1327	EXK1750
KE-350/US	CRT1330	EXK1750

PIONEER ELECTRONIC CORPORATION 4-1, Meguro 1-Chome, Meguro-ku, Tokyo 153, Japan
PIONEER ELECTRONICS SERVICE INC. P.O. Box 1760, Long Beach, California 90801 U.S.A.
PIONEER ELECTRONICS OF CANADA, INC. 505 Cochrane Drive, Markham, Ontario L3R 8E3 Canada
PIONEER ELECTRONIC [EUROPE] N.V. Keetberglaan 1, 2740 Beveren, Belgium
PIONEER ELECTRONICS AUSTRALIA PTY. LTD. 178-184 Boundary Road, Braeside, Victoria 3195, Australia TEL: (03) 580-9911
© PIONEER ELECTRONIC CORPORATION 1991
FT JAN. 1991 Printed in Japan

XQ 103

1. DISASSEMBLY

Note: Always use new washer and E washer at the time of reassembling.

● How to Remove the Belt and Motor

1. Remove screw A fixing the FR lever. (Fig.1)
2. Remove three screws B fixing the sub-chassis unit. Move the unit first in Direction A, then in B direction, and lift it upward for removal. (Fig.2)
3. The belt can now be removed. (Fig.3)
4. Remove two screws C. The motor can be removed. (Fig.3)

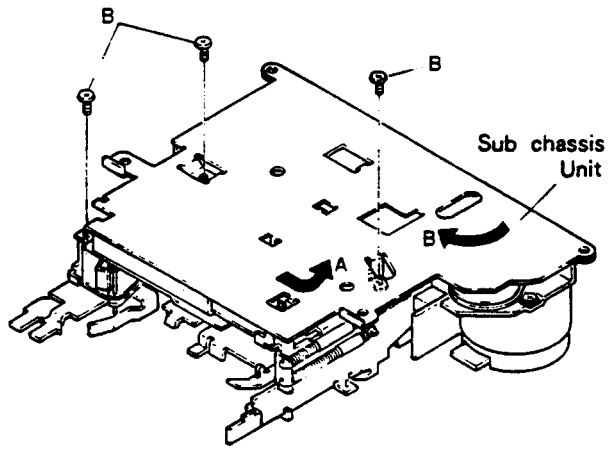

Fig. 2

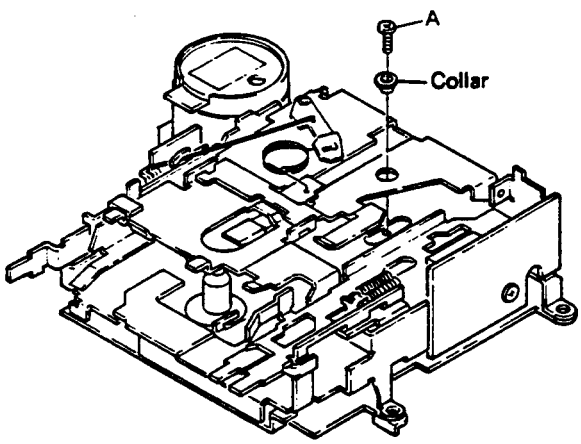

Fig. 1

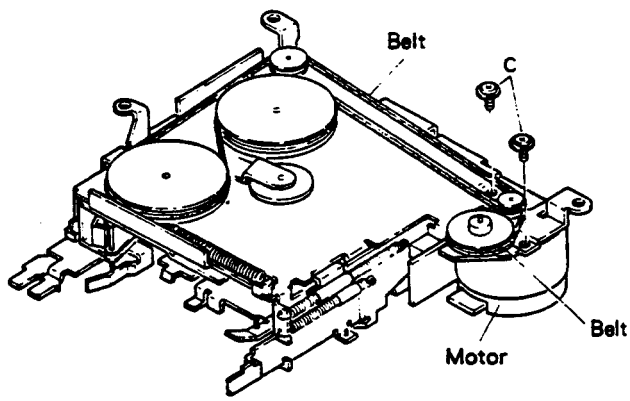

Fig. 3

● How to Remove the Pinch Roller Unit and Head

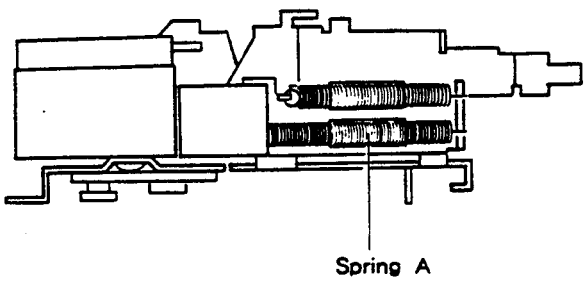

Fig. 4

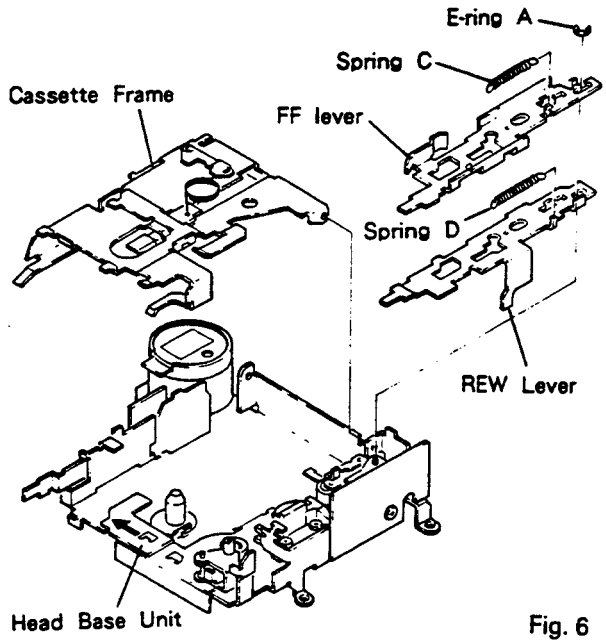

Fig. 6

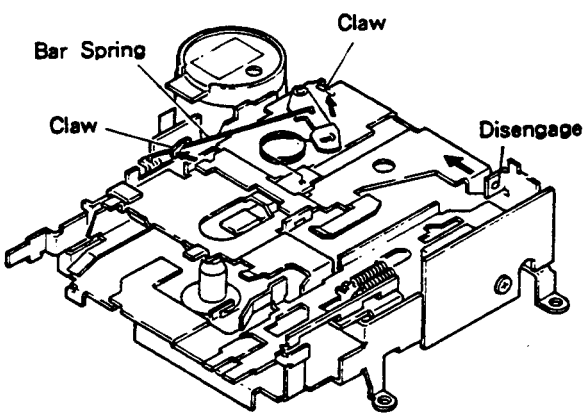

Fig. 5

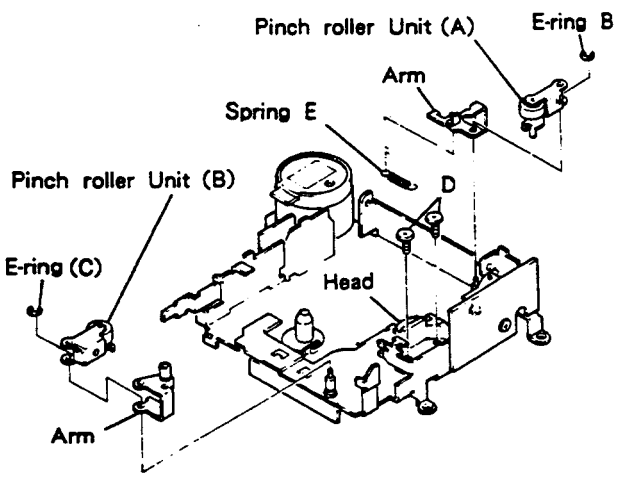

Fig. 7

1. Remove spring A. (Fig.4)
2. Extend claws (2 points). (Fig.5)
3. Remove bar Spring. (Fig.5)
4. Disengage projection by moving in a direction of arrow mark. (Fig.5)
5. The cassette frame is removed. (Fig.6)
6. Remove springs C and D. (Fig.6)
7. Remove E-ring A. (Fig.6)
8. Remove FF/REW levers. (Fig.6)
9. Move head base unit forward. (Fig.6)
10. Remove spring E. (Fig.7)
11. Remove E-ring B. The pinch roller unit (A) can be removed. (Fig.7)
12. Remove E-ring C. The pinch roller unit (B) can be removed. (Fig.7)
13. Remove two screws D. The head can be removed. (Fig.7)

2. ADJUSTMENT

2.1 CHECK POINTS OF CASSETTE MECHANISM

Confirm the following items when replacing parts of the cassette mechanism.	■ Tape speed deviation: $3{,}000^{+90}_{-30}$ Hz (4.76cm/s $^{+3}_{-1}$ %) Using an NCT-111, measure the speed at the start and end of winding and take the maximum value. If values indicated by the pointer vary considerably, adjust to 70% of the minimun and maximum values. Measuring time shall be 5 – 6 seconds.	■ Wow and flutter: Less than 0.2% (WRMS) Using an NCT-111, measure the wow and flutter at the start and end of winding and take the maximum value. If values indicated by the pointer vary considerably, adjust to 70% of the minimum and maximum values. Measuring time shall be 5 – 6 seconds.
■ Fast forward and rewinding time: 100 – 120 seconds Using a C-60, set to fast forward and rewind, and measure the time with a stop watch.	■ Winding torque: 35 – 65g • cm Using a cassette type torque meter (100 g•cm), measure the minimum value while in the play mode. Measuring time shall be 2.5 – 6 seconds.	■ F.F. torque: 70 – 120g • cm Using a cassette type torque meter (120 g•cm), measure the value when the tape stops in the F.F. mode.
■ REW torque: 70 – 120g • cm Using a cassette type torque meter (120 g•cm), measure the value when the tape stops in the REW mode.	■ Back tension torque: 2 – 6g • cm After setting in the REW mode without loading a cassette tape for 5 minutes, measure the back tension torque in the play mode, using a cassette type torque meter.	■ Cassette loading force: Less than 0.7 kg Push the center of the cassette and measure the force with a tension meter (3 kg).

2.2 AZIMUTH ADJUSTMENT

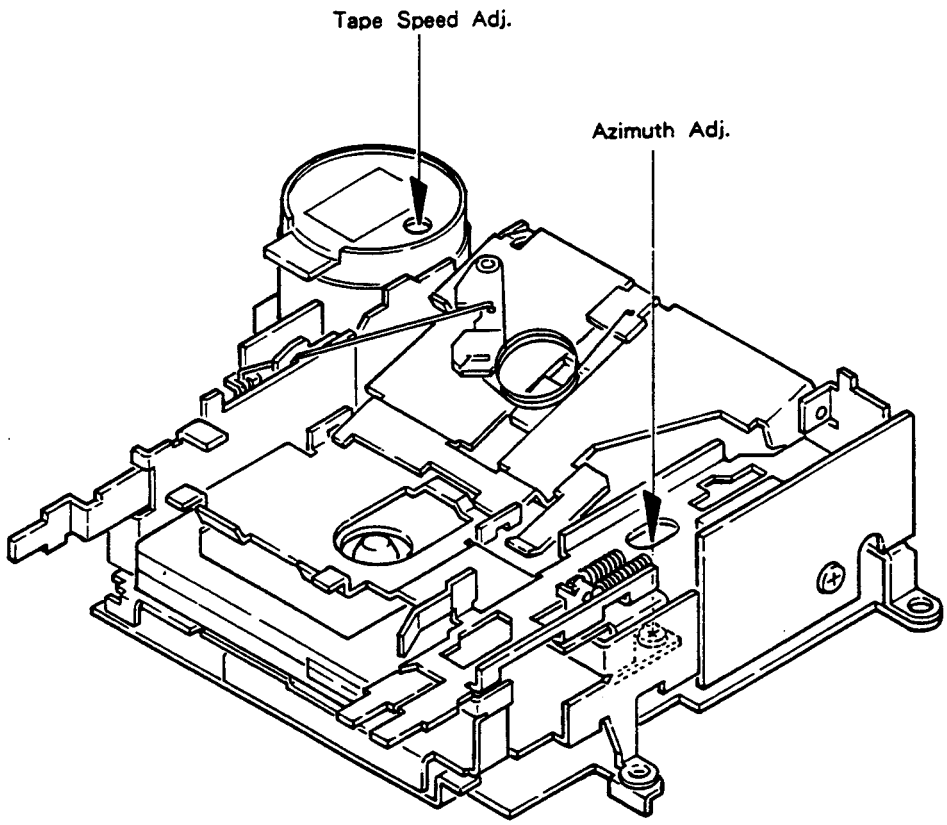

Fig. 8

● To Adjust (EXK1750)

1. Play "A" side of NCT-110 (10kHz, − 10dB). Adjust the screw for maximum output in forward and reverse directions.
2. Play "B" side in forward and reverse directions to confirm adjustment.

2.3 TAPE SPEED ADJUSTMENT

1. Reproduce NCT-111 (3kHz, − 10dB). Adjust the semifixed resistor so that frequency counter shows 3010Hz (+80Hz, − 40Hz).

3. MECHANISM DESCRIPTION

● Loading operation

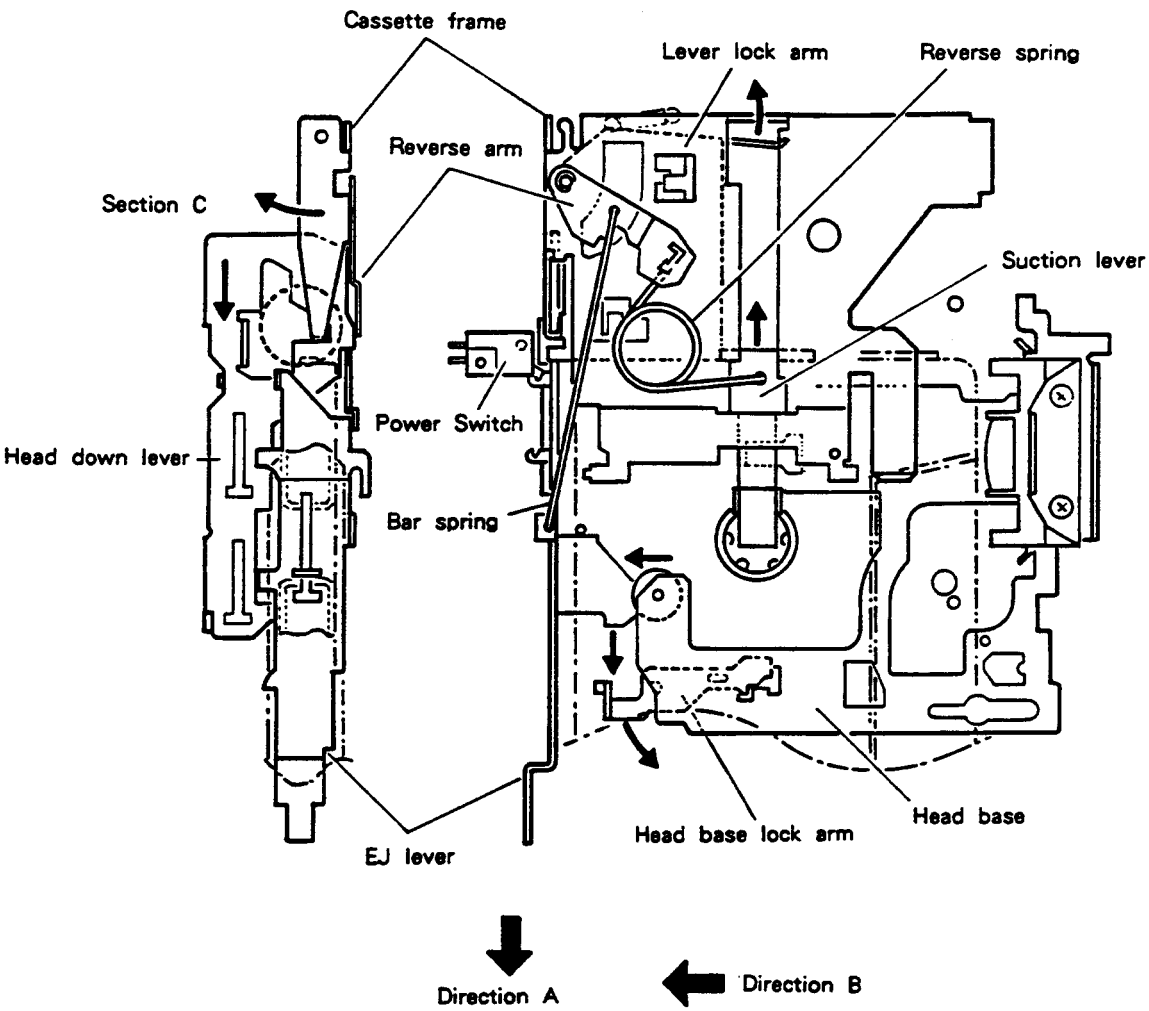

Fig. 9

1. A cassette tape, when inserted, pushes a suction lever.
   The reverse spring rotates to move past the reverse point. Then, the cassette is drawn by a force of a reverse spring (suction operation).
2. After suction, the lever lock arm is pressed to be unlocked.
3. The head down lever is unlocked and the lever moves in Direction A.
4. While moving, the EJ lever turns ON the power switch.
5. The cassette frame engaged to the section C of the head down lever turns. (Cassette drop operation)
6. At the stroke end, the head down lever turns the head base lock arm.
7. A Stopper of the head base lock arm is released, and the head base moves forward (Direction B).

● MS Operation (EXK1720, EXK1750)

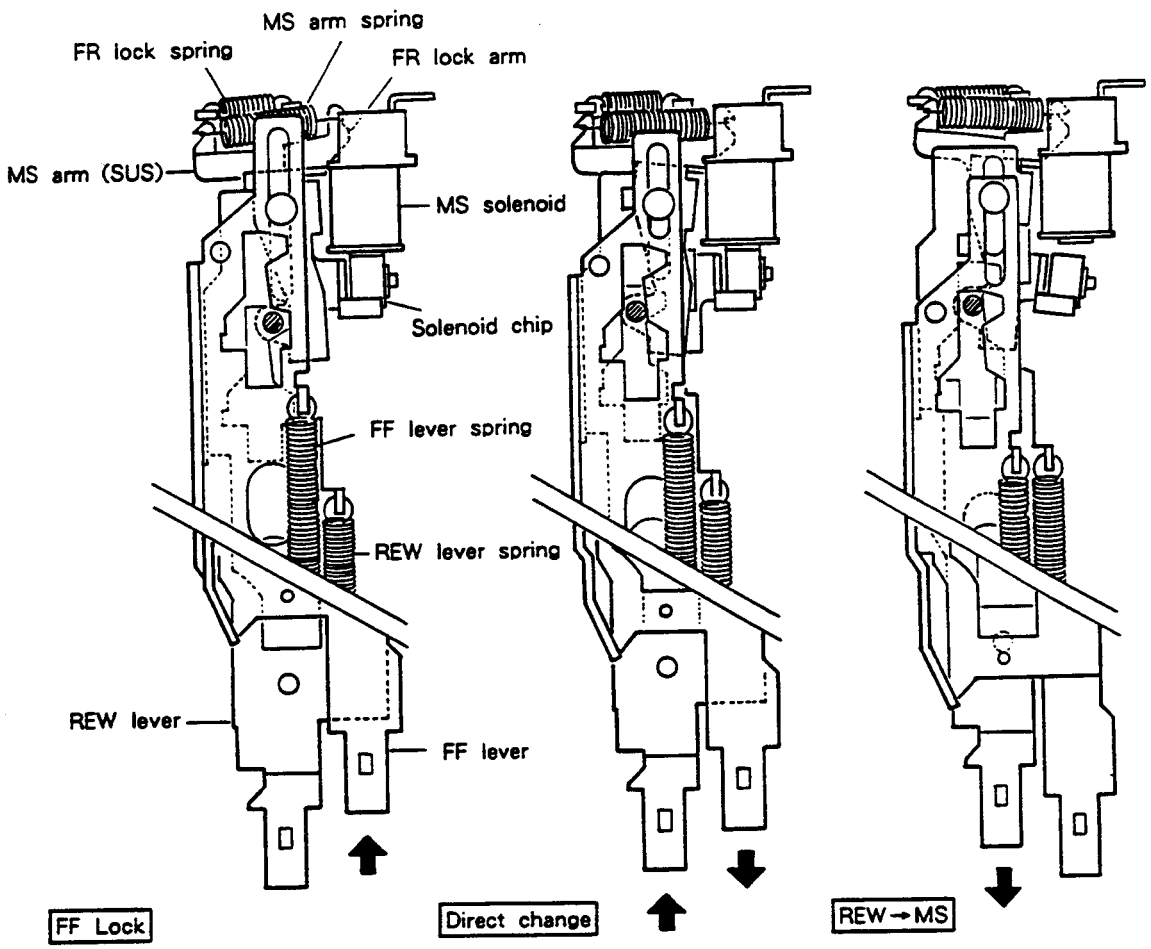

Fig. 10 Fig. 11 Fig. 12

1. The MS solenoid is normally energized to attract the solenoid chip during play and F/R operation. The solenoid chip applies counterclockwise force to the MS arm, thereby putting the FR lock arm into rotation via the MS arm spring. The MS lock shaft of FR lock arm unit catches a taper in a different hole of the FF (or REW) lever to lock the FF (or REW) lever.
2. In case of direct change, pressing the unlocked FF or REW lever causes the lever taper to turn the FR lock arm clockwise. This in turn presses the MS arm spring and FR lock spring to release the locked lever.
3. When the no recording section is caught and the power supply to the solenoid is cut off, the solenoid loses the attraction force and disables locking of the F/R lever. As a result, the F/R lever is unlocked. (This unlocking occurs because the force to retain the lever cannot be generated by the FR lock spring only.)

● Direction Changeover Operation

(1) FWD play operation

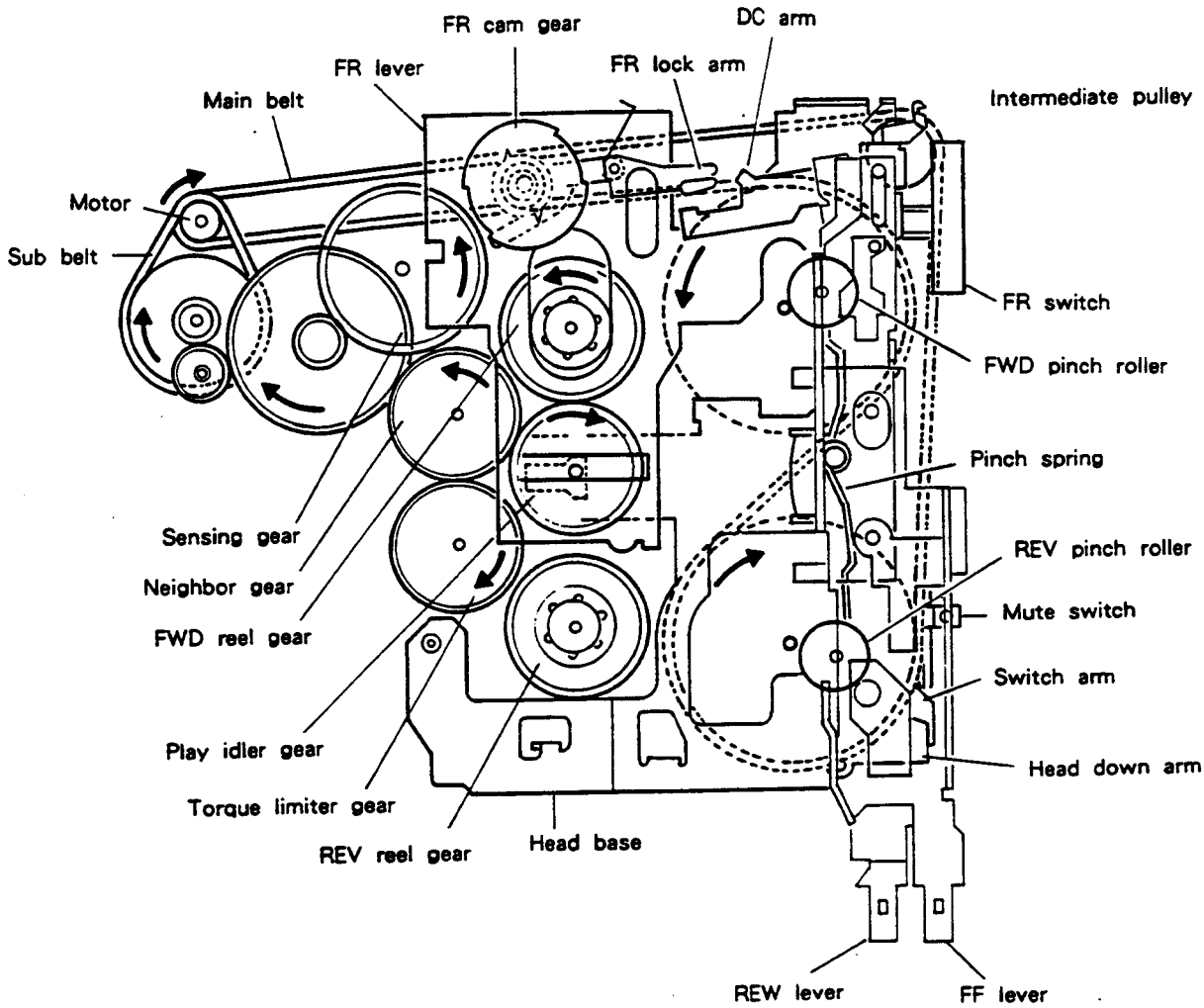

Fig. 13

When the FR lever is in the top position, the pinch spring is in the upper position to press the FWD pinch roller. The FR switch also moves upward and its reaction causes downward force on the FR lever. The spring attached to the FR lever applies upward force to the play idler gear from above to engage it with the neighbor gear and FWD reel gear.

The tape is driven in the FWD direction by a running motor and taken up by the REV reel gear via the torque limiter gear.

(2) Direction change operation

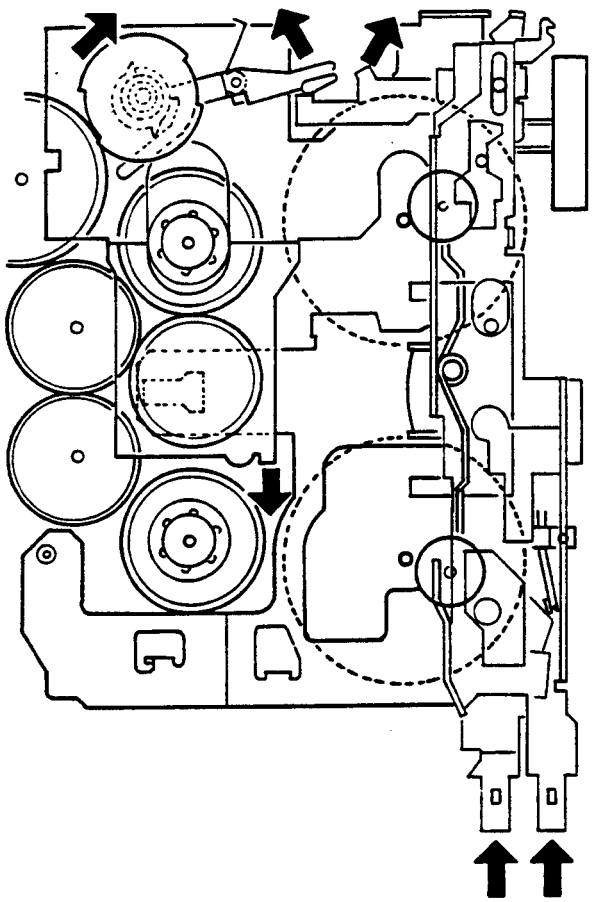

Fig. 14

The direction is changed by pressing FF and REW levers simultaneously. The DC arm turns along a cam groove of FF and REW levers to turn the FR lock arm. As the FR lever applies force from above downward, the FR cam gear turns and the notch meshes with the sensing gear.
As a result, the FR lever moves downward.
When FF and REW levers are kept pressed, the lock arm contacts the outside of the FR cam gear to prevent changeover between FWD and REV. Pressing FF and REW levers also cause the mute switch to be turned ON. In other words, muting is valid while FF and REW levers are pressed. (Fig.14)

(3) REV play operation

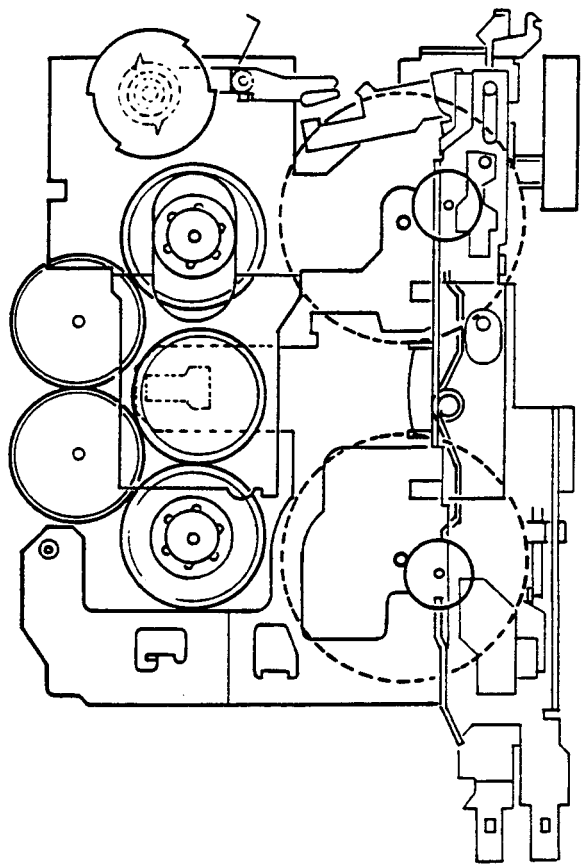

Fig. 15

Moving the NR lever up and down causes changeover among the pinch roller, FR switch, and play idler gear. With FF and REW levers having been returned, the FR lock arm returns to the normal lock position and locks the gear when the FR gear completes an one-half turn. The mute arm also returns to turn OFF the mute switch. The reverse play state is thus obtained. (The same applies to changeover from REV to FWD.)

● FF/REW Operation

(1) FWD play operation

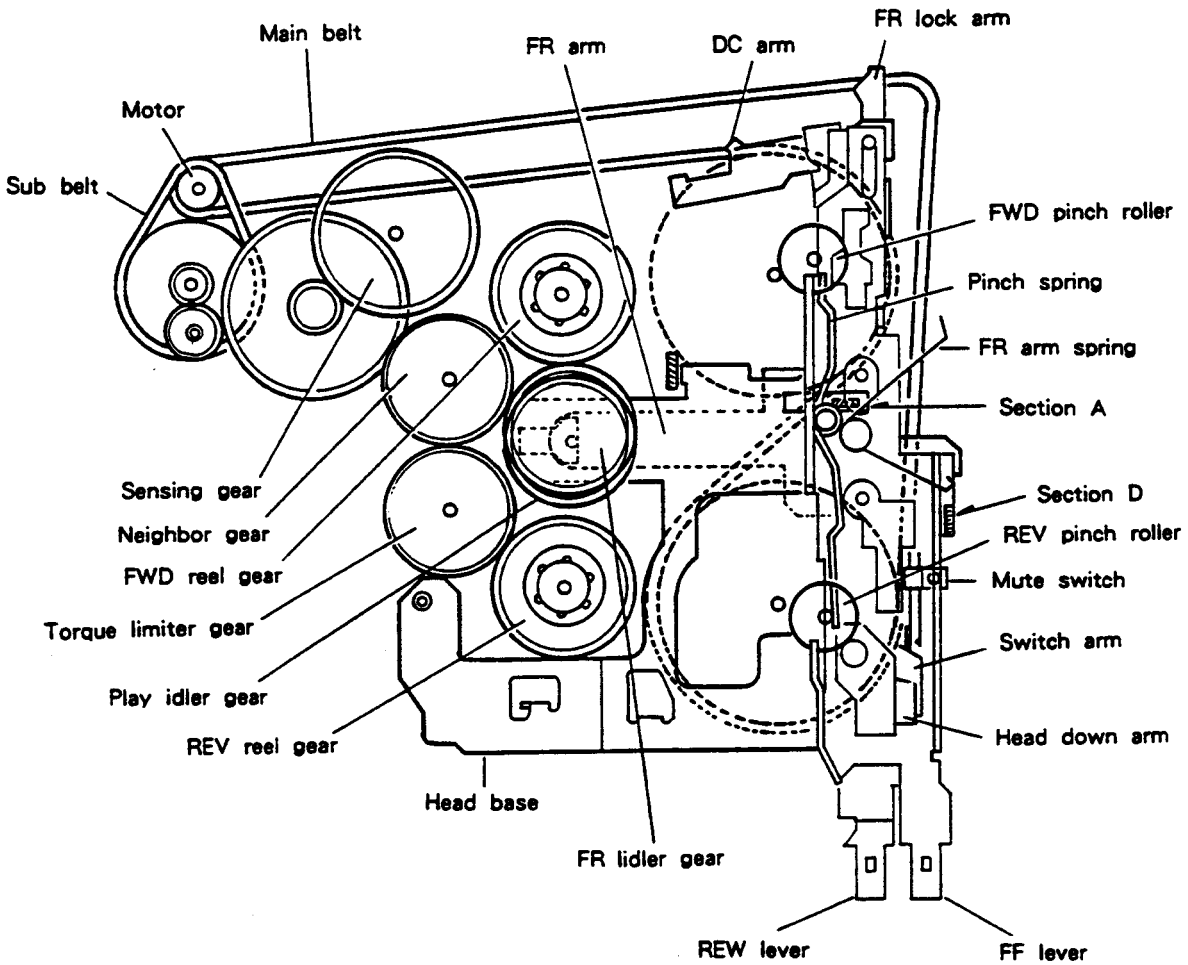

Fig. 16

In the FWD (REV) play state, the head base is fixed by a chassis stopper. The pinch spring presses the pinch roller into contact with a capstan to drive forward the tape. The REV reel gear takes up the tape via the torque limiter gear. In this case, the FR idler gear on the FR arm is centered by Section A of the head base and thus not rotating.

(2) FF Operation

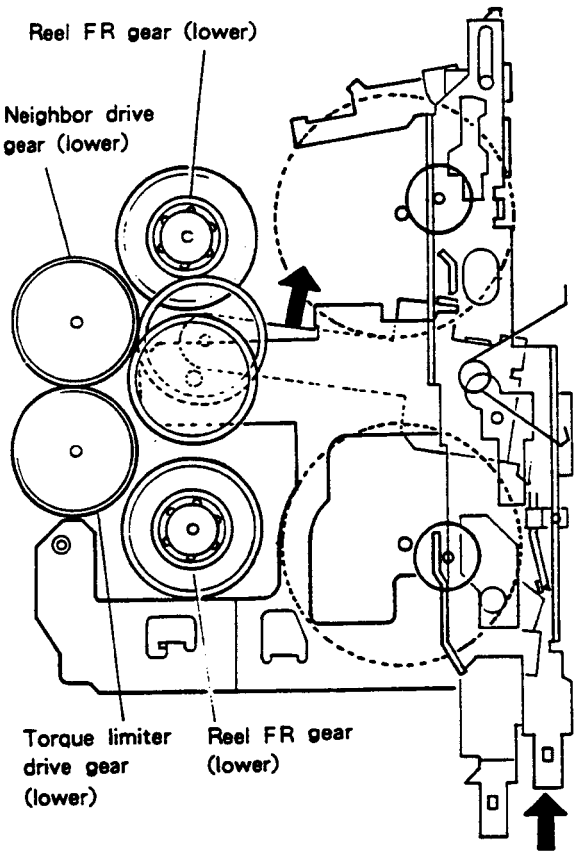

Fig. 17

(3) REW operation

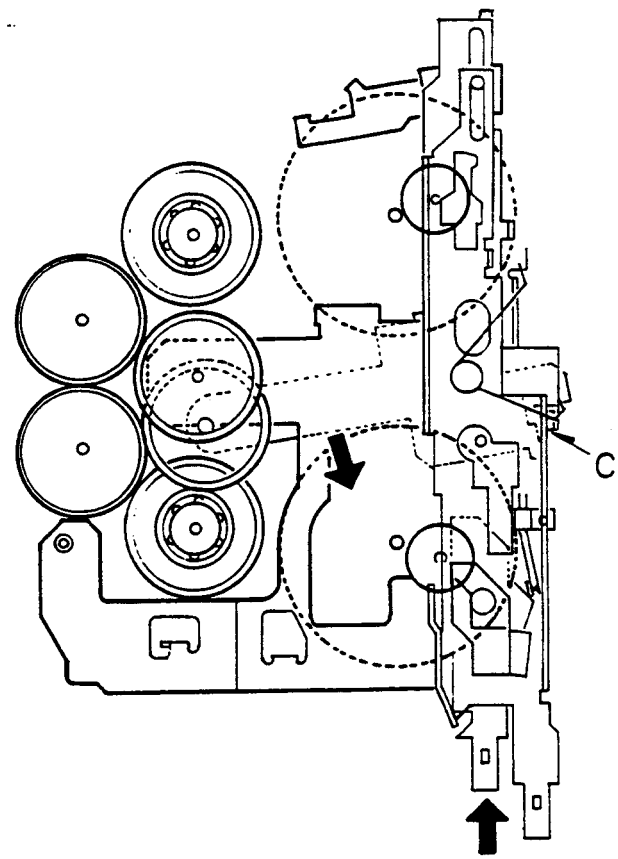

Fig. 18

FF operation is obtained by pressing and locking the FF lever. As the FF lever is pressed, the switch arm turns to turn ON the mute switch. The head base is moved backward along the FF lever cam groove.

As the head base moves backward to release the pinch roller from the capstan, the play idler gear is simultaneously disengaged from the reel gear. As the head base moves backward, the FR arm centered by Section A is put into rotation by the FR arm spring to engage with the FWD side FR gear.

The FF lever is locked by the FR lock arm and performs the FF operation. (Fig.17)

Similar to the case of FF operation, pressing the REW lever causes the mute switch to be turned ON.

Simultaneously with release of the pinch roller from the capstan, the play idler gear is disengaged from the reel gear.

Section D of the REW lever presses a movable side of the FR arm spring, thereby engaging the FR gear to the FR gear on the REV side.

The REW lever is locked by the lock arm, performing the REW operation. This operation is cancelled when Section C is turned by the lever return spring. (Fig.18)

● Sensing Operation

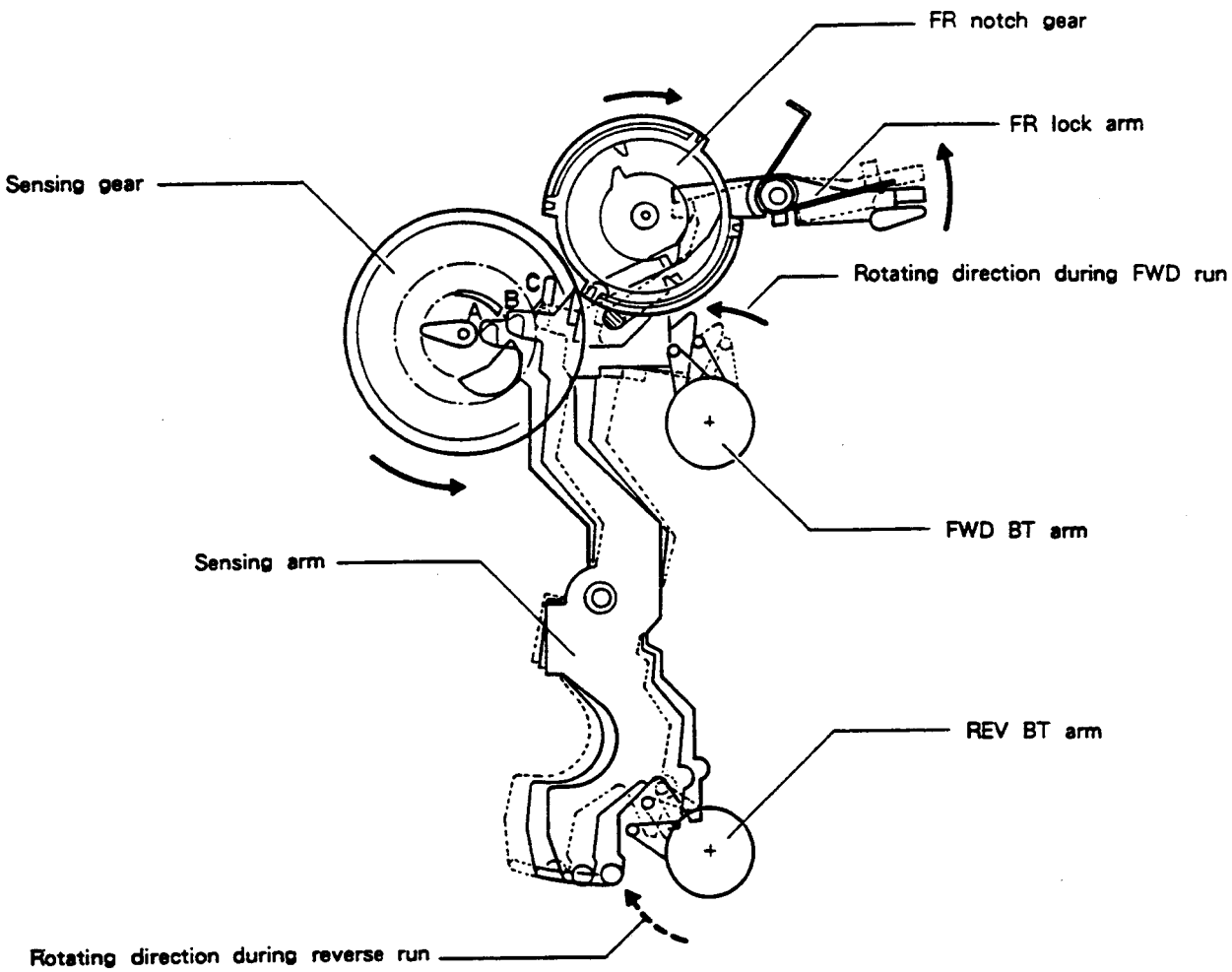

Fig. 19

1. During tape run: The sensing arm keeps oscillation between A and B under a force of the FWD BT arm (or REV BT arm).

2. At end of tape: The force of the BT arm is lost. The sensing arm stops at Position B, then pushed out to Position C by a crescent cam of the sensing gear.

3. Change of run direction: The FR lock arm turns counter-clockwise along with movement of the sensing arm. The FR notch gear is unlocked and begins to turn.