TX-DS474 / TX-SE55

ONKY -00983

Ref. No. 3615

ONKYO® SERVICE MANUAL

AUDIO VIDEO CONTROL RECEIVER MODEL TX-DS474

AUDIO VIDEO KARAOKE CONTROL RECEIVER MODEL TX-SE550

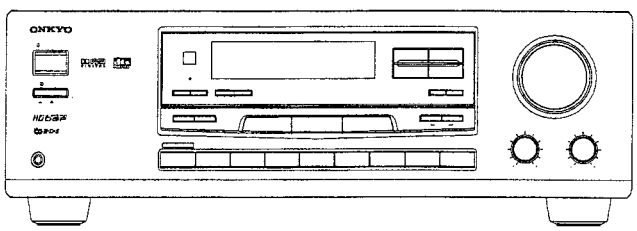

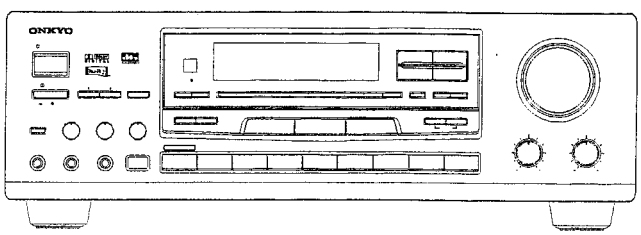

Black, Silver, and Golden models

BMD	120V AC, 60Hz
BMP, BMPT, BMPA, SMP, GMPT	230-240V AC 50Hz
BMWT, BMWR, GMWT, GMWR	120/220V AC, 50/60Hz

Black and Golden models

BMPT, GMPT	230-240V AC 50Hz
BMWT, BMWR, GMWT, GMWR	120/220V AC, 50/60Hz

SAFETY-RELATED COMPONENT WARNING!!

COMPONENTS IDENTIFIED BY MARK ⚠ ON THE SCHEMATIC DIAGRAM AND IN THE PARTS LIST ARE CRITICAL FOR RISK OF FIRE AND ELECTRIC SHOCK. REPLACE THESE COMPONENTS WITH ONKYO PARTS WHOSE PARTS NUMBERS APPEAR AS SHOWN IN THIS MANUAL.

MAKE LEAKAGE-CURRENT OR RESISTANCE MEASUREMENTS TO DETERMINE THAT EXPOSED PARTS ARE ACCEPTABLY INSULATED FROM THE SUPPLY CIRCUIT BEFORE RETURNING THE APPLIANCE TO THE CUSTOMER.

TABLE OF CONTENTS

Specifications 2
Service procedures 3
Microprocessor connection diagram TX-DS474 4
Microprocessor terminal description TX-DS474 5
Microprocessor connection diagram TX-SE550 6
Microprocessor terminal description TX-SE550 7
Panel view TX-DS474 8
Panel view TX-SE550 10
Block diagram Tuner section 12
PC board-parts list TX-SE550 13
PC board-parts list TX-DS474 19
Adjustment procedures 24
IC block diagram 27
Wiring view TX-DS474 31
Wiring view TX-SE550 33
Block diagram Amp. section 35
PC board view 37
Schematic diagram 39
Exploded view TX-DS474 61
Parts list TX-DS474 63
Exploded view TX-SE550 65
Parts list TX-SE550 67
Packing view TX-DS474 69
Packing view TX-SE550 70

ONKYO® AUDIO COMPONENTS

SPECIFICATIONS

AMPLIFIER SECTION

Continuous Average Power output (FTC)	
All channels:	**55 watts per channel min. RMS at 8 ohms, 2 channels driven from 20 Hz to 20 kHz with no more than 0.08% total harmonic distortion.** **70 watts min. RMS at 6 ohms, 2 channels driven from 1 kHz with no more than 0.1% total harmonic distortion.**
Continuous Power output (DIN)	75 watts × 5 at 6 ohms
Maximum Power output (EIAJ)	100 watts × 5 at 6 ohms
Total Harmonic Distortion:	0.08% at rated power (Front)
IM Distortion:	0.08% at rated power (Front)
Damping Factor:	60 at 8 ohms (Front)
Input Sensitivity and Impedance	
PHONO:	2.5 mV, 50 kohms
LINE (CD, TAPE, DVD, VIDEO-1, 2):	200 mV, 50 kohms
MULTICHANNEL INPUT (FRONT L/R, SURROUND L/R, CENTER):	200 mV, 50 kohms
(SUBWOOFER):	36 mV, 50 kohms
DIGITAL-2 (COAXIAL):	0.5 Vp-p, 75 ohms
VIDEO IN (DVD, VIDEO-1, 2):	1 Vp-p, 75 ohms
Output Level and Impedance	
Rec out (TAPE, VIDEO-2):	200 mV, 2.2 kohms
Pre out (SUBWOOFER):	1 V, 2.2 kohms
VIDEO OUT (VIDEO-2, MONITOR):	1 Vp-p, 75 ohms
Phono Overload:	110 mV RMS at 1 kHz, 0.5% T.H.D.
Frequency Response:	20 Hz to 30 kHz, ±1 dB
RIAA Deviation:	20 Hz to 20 kHz, ±0.8 dB
Tone Control	
Bass:	±10 dB at 100 Hz
Treble:	±10 dB at 10 kHz
Signal-to-Noise Ratio	
Phono:	80 dB (IHF A, 5 mV input)
CD/Tape:	100 dB (IHF A)

VIDEO SECTION

Signal sensitivity and impedance:	1 Vp-p, 75 ohms (DVD, VIDEO-1, VIDEO-2 input, output)

TUNER SECTION

FM

Tuning Range:	87.5 — 108.0 MHz
Usable Sensitivity	
Mono:	11.2 dBf, 1.0 μV (75 ohms)
Stereo:	18.2 dBf, 2.2 μV (75 ohms)
50 dB Quieting Sensitivity	
Mono:	18.2 dBf, 2.2 μV (75 ohms)
Stereo:	39.2 dBf, 24 μV (75 ohms)
Capture Ratio:	1.5 dB
Image Rejection Ratio	
U.S.A. & Canadian models:	40 dB
Other area models:	85 dB
IF Rejection Ratio:	90 dB
Signal-to-Noise Ratio	
Mono:	73 dB
Stereo:	67 dB
Alternate Channel Attenuation:	55 dB
Selectivity:	50 dB (DIN)
AM Suppression Ratio:	50 dB
Total Harmonic Distortion	
Mono:	0.15%
Stereo:	0.25%
Frequency Response:	30 Hz — 15 kHz, ±1.5 dB
Stereo Separation:	45 dB at 1 kHz 30 dB at 100 Hz — 10 kHz

AM

Tuning Range	
U.S.A. & Canadian models:	530—1,710 kHz (10 kHz steps)
European & Australian models:	522—1,611 kHz (9 kHz steps)
Worldwide models:	531—1,602 kHz (9 kHz steps), 530—1,710 kHz (10 kHz steps)
Usable Sensitivity:	30 μV
Image Rejection Ratio:	40 dB
IF Rejection Ratio:	40 dB
Signal-to-Noise Ratio:	40 dB
Total Harmonic Distortion:	0.7%

GENERAL

Power Supply:	AC 120 V, 60 Hz AC 230 V, 50 Hz AC 220-230 V and 120 V switchable, 50/60 Hz
Power Consumption:	3.3 A 240 W
Dimensions (W × H × D):	435 × 150 × 324 mm 17-1/8" × 5-7/8" × 12-3/4"
Weight:	9.5 kg, 20.9 lbs. 10.7 kg, 23.6 lbs.

REMOTE CONTROL

Transmitter:	Infrared
Signal range:	Approx. 5 meters, 16 ft.
Power supply:	Two "AA" batteries (1.5 V × 2)

Specifications and features are subject to change without notice.

Power supply and voltage vary depending on the area in which the unit is purchased.

SERVICE PROCEDURES

1. Replacing the fuses

This symbol located near the fuse indicates that the fuse used is fast operating type. For continued protection against fire hazard, replace with same type fuse. For fuse rating refer to the marking adjacent to the symbol.

Ce symbole indique que le fusible utlise est a rapide. Pour une protection permanente, n'utiliser que des fusibles de meme type. Ce darnier est indique la qu le present symbol est appose.

REF. NO.	PART NO.	DESCRIPTION
F911	252166	⚠ 6.3A-UL/T-237,Fuse <D>
	252198	⚠ 8A-UL, Fuse <W>
F922	252077 or	⚠ 4A-SE-EAK or
	252243	⚠ 4A-SE-EAK,Fuse <P/W/T/A>
F933	252075 or	⚠ 2.5A-SE-EAK or
	252241	⚠ 2.5A-SE-EAK, Fuse <P/T>

NOTE: <D>: 120V model only
<P>: European model only
<W>: Worldwide model only
<T>: Asian model only
<A>: Australian model only

2. To Initialize the unit

This device employs a microprocessor to perform various functions and operations. If interference generated by an external power supply, radio wave, or other electrical source results in accident which causes the specified operations and functions to operate abnormally.

To perform a result, please follow the procedure below.

1. Press and hold down VIDEO 1 button, then press SPEAKER A button.

2. After "clear" is displayed, the prest memory and each mode stored in the memory, such as surround, are initialized and will return to the factory settings.

3. Safety-check out

(Only U.S.A. model)

After correcting the original service problem, perform the following safety check before releasing the set to the customer. Connect the insulating-resistance tester between the plug of power supply cord and the screw on the back panel.

Specifications: 3.3 Mohm±10% at 500V.

4. Change of voltage

Worldwide models are equipment with a voltage selector to conform with local power supplies. This switch is located on the back panel.

Be sure to set this switch to match the voltage of the power supply in your area before turning the power switch on.

This switch is set to 220V at the factory. Voltage is changed by sliding the groove in the switch with the screwdriver to the right or left. Confirm that the switch has been moved all the way to the right or left before turning the power switch on.

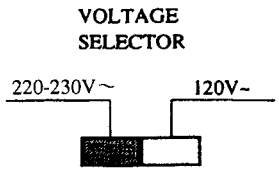

5. Memory preservation

This unit does not require memory preservation batteries.

A built-in memory power back-up system preserves contents of the memory during power failures and even when the unit is unplugged.

The unit must be plugged in and the power switch turned on and off once in order to charge the back-up system. Note that since this is not a permanent memory, the power switch must be turned on and off a few times each month the keep the back-up system operative.

The period of the time during which memory contents are preserved after power has last been turned off varies depending on climate and placement of the unit. On the average, memory contents are protected over a period of 3 to 4 weeks (a minimum of 2 weeks) after the last time power has been turned off. This period is shorted when the unit is exposed to very high humidity or used in an area with an extremely humid climate.

6. Setting the tuning step frequency

Worldwide models are equipped with a step band selector switch. This switch is located on the back panel. This switch is set to 9 kHz at the factory, but may have to be reset to 10 kHz depending on the area where the unit is used.

	AM band step
Europe:	9 kHz
U.S.A.:	10 kHz

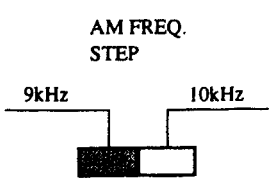

7. Changing the band step

With the exception of the worldwide models, a tuning step selector switch is not provided. When you change the band step, change the parts as shown below.

	To 10kHz	To 9kHz
R7035	Open	10kohm
R7036	Shorted	Open
R7037	Open	10kohm
R7038	Shorted	Open

MICROPROCESSOR-CONNECTION DIAGRAM
MODEL TX-DS474

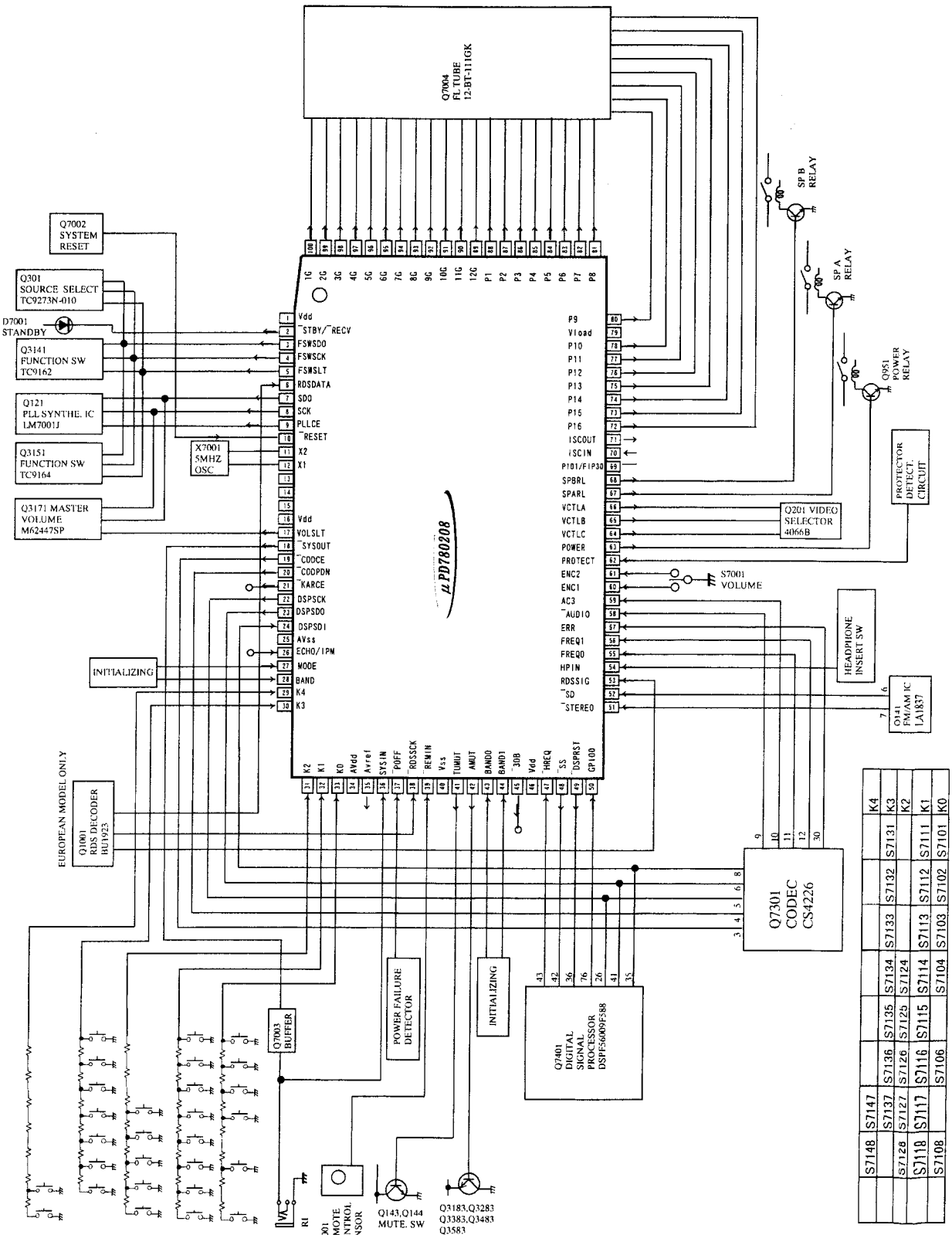

MICROPROCESSOR-TERMINAL DESCRIPITION

No.	Function	I/O	Description
1	Vdd		Power supply terminal (+5V)
2	$\overline{\text{STBY/RECV}}$	O	STANDBY/RECEIVED indicator control output terminal.
3	FSWSDO	O	Data output terminal to function switch ICs.
4	FSWSCK	O	Clock output terminal to function switch ICs.
5	FSWSLT	O	Latch output terminal to function switch ICs.
6	RDSDATA	I	Data input terminal from RDS decoder
7	SDO	O	Data output terminal to PLL IC LM7001J and Master volume IC M62447SP.
8	SCK	O	Clock output terminal to PLL IC LM7001J and Master volume IC M62447SP.
9	PLLCE	O	Chip enable output terminal to PLL IC LM7001J.
10	$\overline{\text{RESET}}$	I	System reset input terminal
11	X2		Ceramic oscillator connection terminals.
12	X1		Connect 5.0MHz ceramic oscillator between the both terminals.
13	IC		Internal connection terminal.
14,15	XT2,XT1		Sub system clock input terminal. Not used.
16	Vdd		Power supply terminal (+5V)
17	VOLSLT	O	Latch output terminal to Master volume IC M62447SP.
18	$\overline{\text{SYSOUT}}$	O	System code output terminal
19	$\overline{\text{CODCE}}$	O	Chip enable output terminal to DIR IC CS4226.
20	$\overline{\text{CODPDN}}$	O	Data output terminal to DIR IC CS4226.
21	$\overline{\text{KARCE}}$	O	Not used.
22	DSPSCK	O	Clock output terminal to DSP ICs.
23	DSPSDO	O	Data output terminal to DSP ICs.
24	DSPSDI	I	Data input terminal from DSP ICs.
25	AVss		Power supply terminal (GND)
26	ECHO	I	Not used.
27	MODE	I	Initializing input terminal of operation mode.
29-33	K4-K0	I	Operation key connection terminals
34	AVdd		Power supply terminal
35	Avref	O	Reference voltage terminal
36	SYSIN	I	System code input terminal
37	$\overline{\text{POFF}}$	I	Power failure detection terminal
38	$\overline{\text{RDSSCK}}$	I	Clock input terminal from RDS decoder
39	$\overline{\text{REMIN}}$	I	Signal input terminal from remote controller
40	Vss		Power supply terminal.
41	TUMUT	O	Muting control output terminal for tuner section

No.	Function	I/O	Description
42	AMUT	O	Muting control output terminal for amplifier section
43	BAND0	I	Initializing input terminal for band step
44	BAND1	I	
45	$\overline{\text{3DB}}$	O	Not used.
46	Vdd		Power supply terminal
47	$\overline{\text{HREQ}}$	I	Request signal input terminal from DSP IC.
48	$\overline{\text{SS}}$	O	Output terminal to DSP IC.
49	$\overline{\text{DSPRST}}$	O	Reset signal output terminal to DSP ICs.
50	GPI00	I	Input terminal from terminal SS of DSP IC.
51	$\overline{\text{STEREO}}$	I	Stereo broadcast detection input terminal
52	$\overline{\text{SD}}$	I	Broadcast detection input terminal
53	RDSSIG	I	Signal input terminal from RDS decoder
54	HPIN	I	Input terminal when the headphone is inserted.
55	FREQ0	I	Input terminal to check the frequency of DIR CS4226.
56	FREQ1	I	Input terminal to check the frequency of DIR CS4226.
57	ERR	I	OVL/ERR signal input terminal from DIR CS4226. H=Over level when analog signal or Error when digital signal
58	$\overline{\text{AUDIO}}$	I	MPEG detection Input terminal from DIR.
59	AC3	I	AC3 detection Input terminal from DIR.
60	ENC1	I	Volume control input terminal
61	ENC2	I	Volume control input terminal
62	PROTECT	I	Detection input terminal for protection circuit
63	POWER	O	Relay control output terminal for POWER
64	VCTLC	O	Video selector control output terminal
65	VCTLB	O	Video selector control output terminal
66	VCTLA	O	Video selector control output terminal
67	SPARL	O	Control output terminal for SPEAKER A relay
68	SPBRL	O	Control output terminal for SPEAKER B relay
69		NC	Not used.
70	ISCIN	I	Not used.
71	ISCOUT	O	Not used.
72-78	P16-P10	O	Segment output terminals
79	Vload		Power supply terminal for FL tube
80-88	P9-P1	O	Segment output terminals
89-100	12G-1G	O	Grid output terminals.

MICROPROCESSOR-CONNECTION DIAGRAM
MODEL TX-SE550

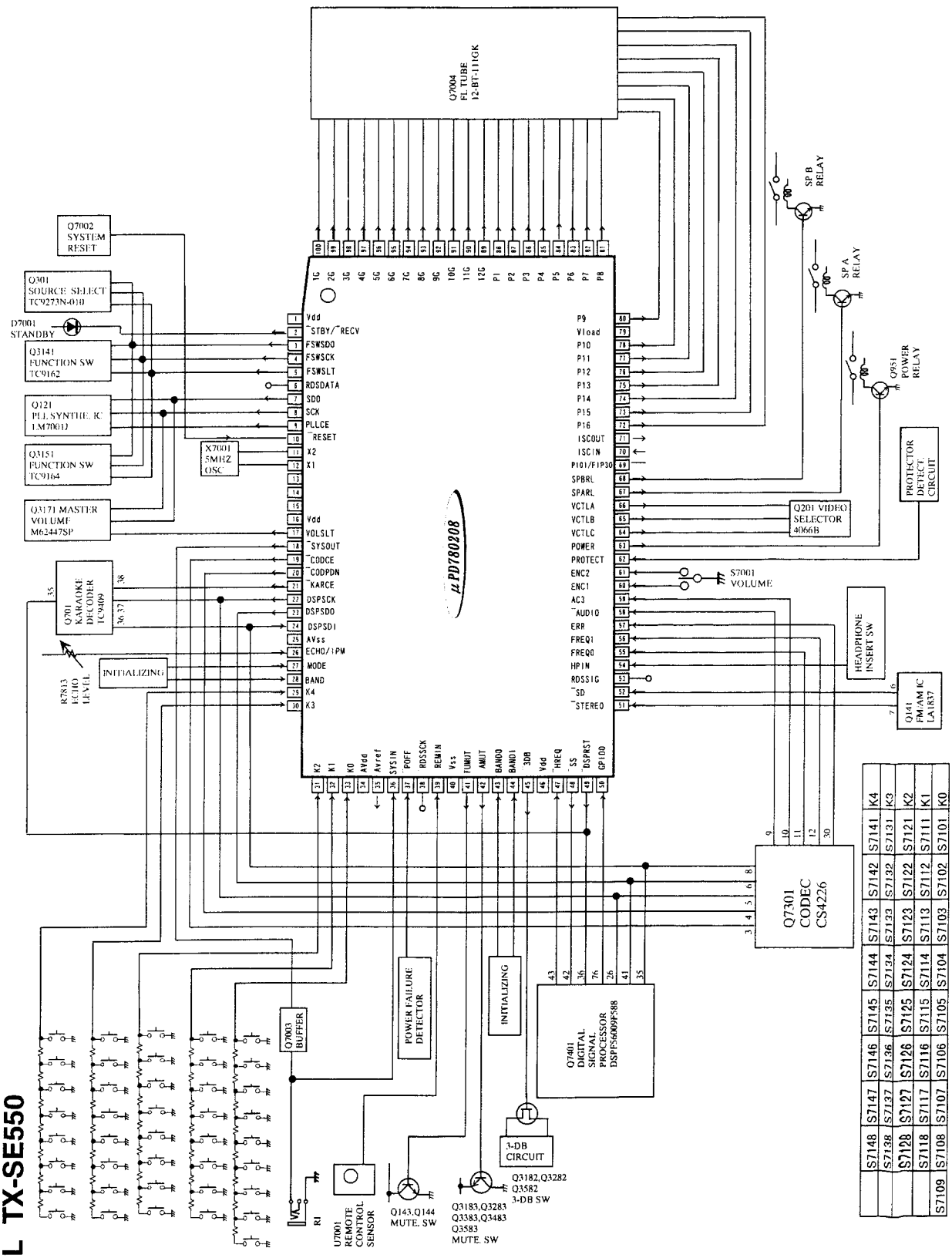

MICROPROCESSOR-TERMINAL DESCRIPITION

No.	Function	I/O	Description	No.	Function	I/O	Description
1	Vdd		Power supply terminal (+5V)	42	AMUT	O	Muting control output terminal for amplifier section
2	$\overline{STBY/RECV}$	O	STANDBY/RECEIVED indicator control output terminal.	43	BAND0	I	Initializing input terminal for band step
3	FSWSDO	O	Data output terminal to function switch ICs.	44	BAND1	I	
4	FSWSCK	O	Clock output terminal to function switch ICs.	45	$\overline{3DB}$	O	Control signal output terminal to 3-DB circuit.
5	FSWSLT	O	Latch output terminal to function switch ICs.	46	Vdd		Power supply terminal
6	RDSDATA	I	Not used.	47	$\overline{HREQ}$	I	Request signal input terminal from DSP IC.
7	SDO	O	Data output terminal to PLL IC LM7001J and Master volume IC M62447SP.	48	$\overline{SS}$	O	Output terminal to DSP IC.
8	SCK	O	Clock output terminal to PLL IC LM7001J and Master volume IC M62447SP.	49	$\overline{DSPRST}$	O	Reset signal output terminal to DSP and KARAOKE decoder ICs.
9	PLLCE	O	Chip enable output terminal to PLL IC LM7001J.	50	GPI00	I	Input terminal from terminal SS of DSP IC.
10	$\overline{RESET}$	I	System reset input terminal	51	$\overline{STEREO}$	I	Stereo broadcast detection input terminal
11	X2		Ceramic oscillator connection terminals.	52	$\overline{SD}$	I	Broadcast detection input terminal
12	X1		Connect 5.0MHz ceramic oscillator between the both terminals.	53	RDSSIG	I	Not used.
13	IC		Internal connection terminal.	54	HPIN	I	Input terminal when the headphone is inserted.
14,15	XT2,XT1		Sub system clock input terminal. Not used.	55	FREQ0	I	Input terminal to check the frequency of DIR CS4226.
16	Vdd		Power supply terminal (+5V)	56	FREQ1	I	Input terminal to check the frequency of DIR CS4226.
17	VOLSLT	O	Latch output terminal to Master volume IC M62447SP.	57	ERR	I	OVL/ERR signal input terminal from DIR CS4226.
18	$\overline{SYSOUT}$	O	System code output terminal				H=Over level when analog signal or Error when digital signal
19	$\overline{CODCE}$	O	Chip enable output terminal to DIR IC CS4226.	58	$\overline{AUDIO}$	I	MPEG detection Input terminal from DIR.
20	$\overline{CODPDN}$	O	Data output terminal to DIR IC CS4226.	59	AC3	I	AC3 detection Input terminal from DIR.
21	$\overline{KARCE}$	O	Chip enable output terminal to KARAOKE decoder IC.	60	ENC1	I	Volume control input terminal
22	DSPSCK	O	Clock output terminal to DSP and KARAOKE decoder ICs.	61	ENC2	I	Volume control input terminal
23	DSPSDO	O	Data output terminal to DSP ICs.	62	PROTECT	I	Detection input terminal for protection circuit
24	DSPSDI	I	Data input terminal from DSP and KARAOKE decoder ICs.	63	POWER	O	Relay control output terminal for POWER
25	AVss		Power supply terminal (GND)	64	VCTLC	O	Video selector control output terminal
26	ECHO	I	Echo level input terminal	65	VCTLB	O	Video selector control output terminal
27	MODE	I	Initializing input terminal of operation mode.	66	VCTLA	O	Video selector control output terminal
29-33	K4-K0	I	Operation key connection terminals	67	SPARL	O	Control output terminal for SPEAKER A relay
34	AVdd		Power supply terminal	68	SPBRL	O	Control output terminal for SPEAKER B relay
35	Avref	O	Reference voltage terminal	69		NC	Not used.
36	SYSIN	I	System code input terminal	70	ISCIN	I	Not used.
37	$\overline{POFF}$	I	Power failure detection terminal	71	ISCOUT	O	Not used.
38	$\overline{RDSSCK}$	I	Not used.	72-78	P16-P10	O	Segment output terminals
39	$\overline{REMIN}$	I	Signal input terminal from remote controller	79	Vload	O	Power supply terminal for FL tube
40	Vss		Power supply terminal.	80-88	P9-P1	O	Segment output terminals
41	TUMUT	O	Muting control output terminal for tuner section	89-100	12G-1G	O	Grid output terminals.

PANEL VIEW
MODEL TX-DS474

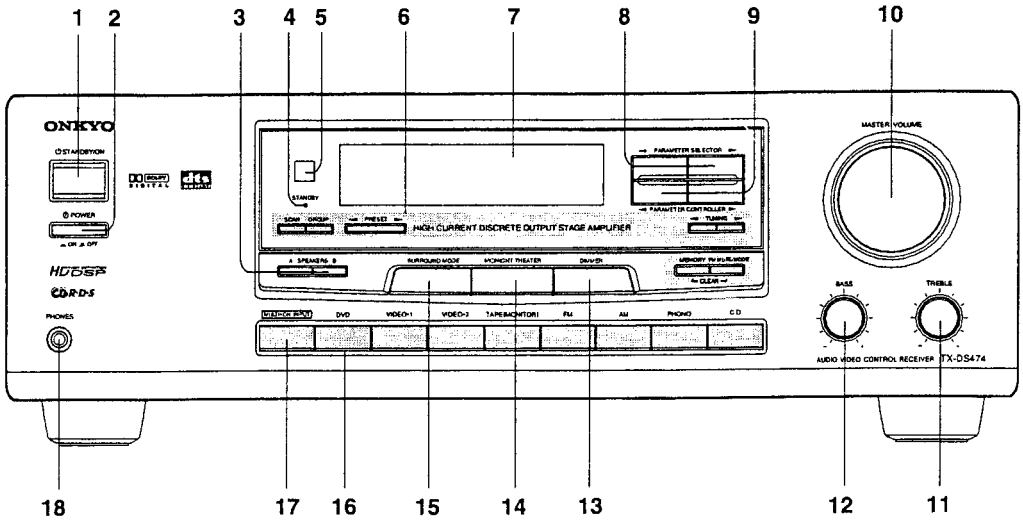

Display

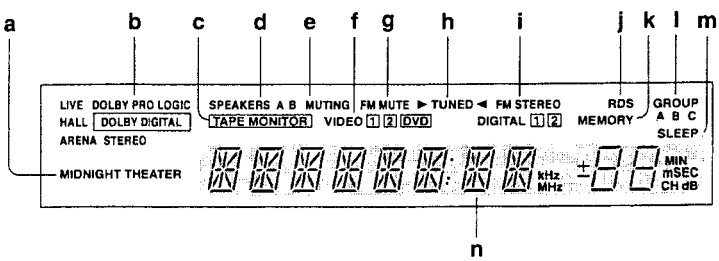

Front panel

1. STANDBY/ON button
2. POWER switch
3. SPEAKERS A/B button
4. STANDBY indicator
5. Remote control sensor
6. TUNER operation buttons
   SCAN button
   GROUP button
   PRESET button
   TUNING UP/DOWN buttons
   FM MUTE/MODE button
   MEMORY button
7. Display (Refer to the "Display" illustration.)
8. PARAMETER SELECTOR buttons
9. PARAMETER CONTROLLER buttons
10. MASTER VOLUME control knob
11. TREBLE control knob
12. BASS control knob
13. DIMMER button
14. MIDNIGHT-THEATER button
15. SURROUND MODE button
16. Input selector buttons
17. MULTI CHANNEL INPUT button
18. PHONES jack

Display

a. MIDNIGHT THEATER indicator
b. Surround Mode indicators
c. Tape Monitor indicator
d. Speakers A/B indicators
e. Audio Mute indicator
f. Video input selector indicators
g. FM Mute On/Off indicator
h. Tuned indicators
i. FM Stereo indicator
j. RDS station received indicator (European model only)
k. Memory indicator
l. Group indicators
m. Sleep indicator
n. Multi function display (Frequency and Preset station/Input selector/Sleep time/Volume level)

Remote Controller

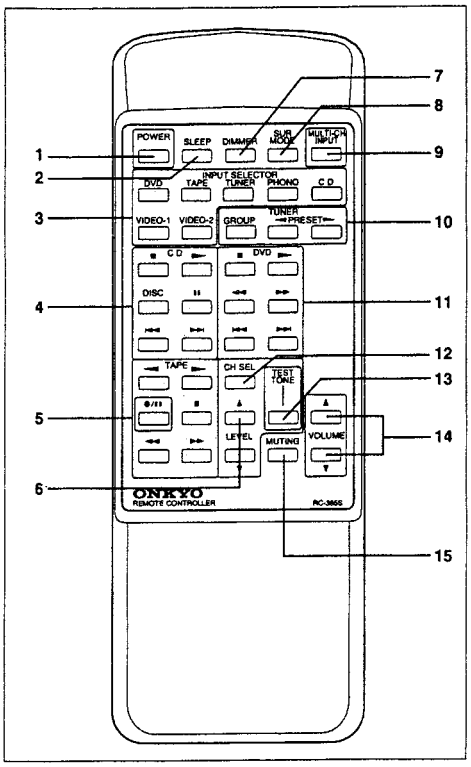

1. **Power button (POWER)**
2. **Sleep button (SLEEP)**
3. **Input selector buttons**
   (Video 1, 2, PHONO, CD, DVD, TAPE)
4. **CD operation buttons**
5. **Tape operation buttons**
6. **Level up/down button (LEVEL ▲/▼)**
7. **DIMMER button (DIMMER)**
8. **Surround mode button (SUR MODE)**
9. **Multi channel input button**
10. **Tuner operation buttons (TUNER)**
    GROUP: — Group selector button
    ◀PRESET▶: — Preset memory up/down buttons
11. **DVD operation buttons**
12. **Channel selector button (CH SEL)**
13. **Test tone button (TEST TONE)**
14. **Volume buttons (VOLUME ▲/▼)**
    Volume control for the Front, Center, Surround and Sub-woofer speakers.
15. **Audio muting button (MUTING)**

Rear Panel

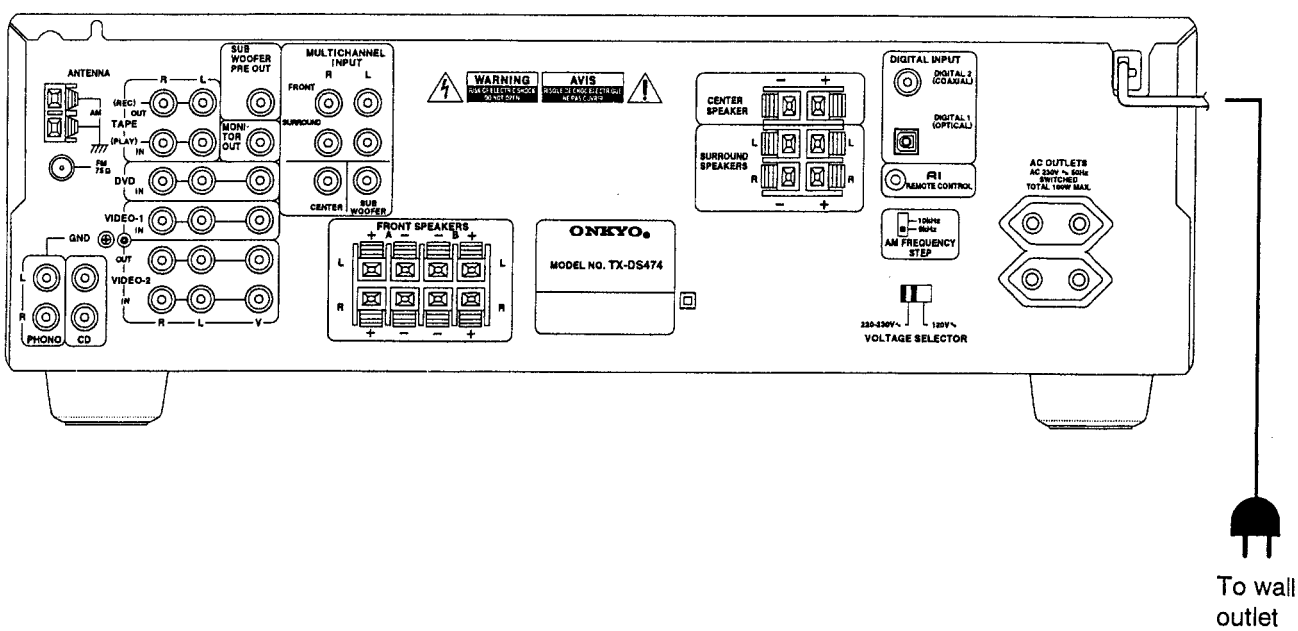

To wall outlet

PANEL VIEW
MODEL TX-SE550

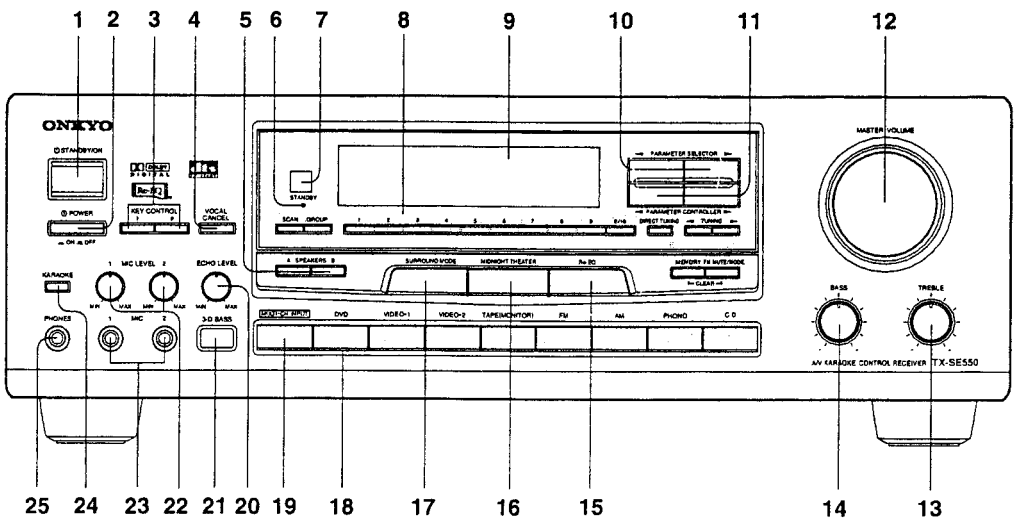

Display

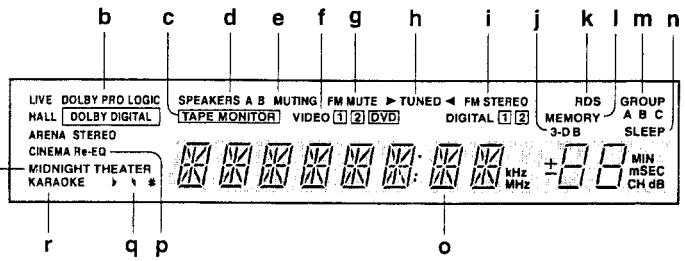

Front panel

1. STANDBY/ON button
2. POWER switch
3. Key control buttons
4. Vocal cancel button
5. SPEAKERS A/B button
6. STANDBY indicator
7. Remote control sensor
8. TUNER operation buttons
   SCAN button
   GROUP button
   Number buttons
   DIRECT TUNING button
   TUNING UP/DOWN buttons
   FM MUTE/MODE button
   MEMORY button
9. Display (Refer to the "Display" illustration.)
10. PARAMETER SELECTOR buttons
11. PARAMETER CONTROLLER buttons
12. MASTER VOLUME control knob
13. TREBLE control knob
14. BASS control knob
15. Re-EQ button
16. MIDNIGHT THEATER button
17. SURROUND MODE button
18. Input selector buttons
19. MULTI CHANNEL INPUT button
20. Echo level control knob
21. 3-D BASS button
22. MIC level 1/2 knobs
23. MIC input 1/2 jacks
24. Karaoke button
25. PHONES jack

Display

a. MIDNIGHT THEATER indicator
b. Surround Mode indicators
c. Tape Monitor indicator
d. Speakers A/B indicators
e. Audio Mute indicator
f. Video input selector indicators
g. FM Mute On/Off indicator
h. Tuned indicators
i. FM Stereo indicator
j. 3-D Bass indicator
k. RDS station received indicator (European model only)
l. Memory indicator
m. Group indicators
n. Sleep indicator
o. Multi function display
   (Frequency and Preset station/Input selector/Sleep time/ Volume level)
p. CINEMA Re-EQ indicator
q. Key transpose indicators
r. Karaoke indicator

Remote Controller

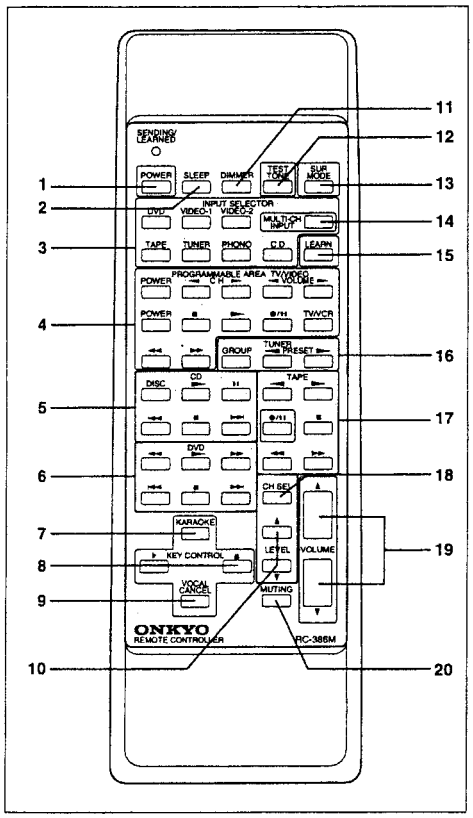

1. **Power button (POWER)**
2. **Sleep button (SLEEP)**
3. **Input selector buttons**
4. **PROGRAMMABLE AREA buttons**
5. **CD operation buttons**
6. **DVD operation buttons**
7. **Karaoke button**
8. **Key control button**
   ♯ : Pitch is raised in semitone steps.
   ♭ : Pitch is lowered in semitone steps.
9. **Vocal cancel**
10. **Level up/down button (LEVEL ▲/▼)**
11. **DIMMER button (DIMMER)**
12. **Test tone button (TEST TONE)**
13. **Surround mode button (SUR MODE)**
14. **Multi channel input button**
15. **LEARN button**
16. **Tuner operation buttons (TUNER)**
    GROUP: — Group selector button
    ◄PRESET►: — Preset memory up/down buttons
17. **Tape operation buttons**
18. **Channel selector button (CH SEL)**
19. **Volume buttons (VOLUME ▲/▼)**
    Volume control for the Front, Center, Surround and Sub-woofer speakers.
20. **Audio muting button (MUTING)**

Rear Panel

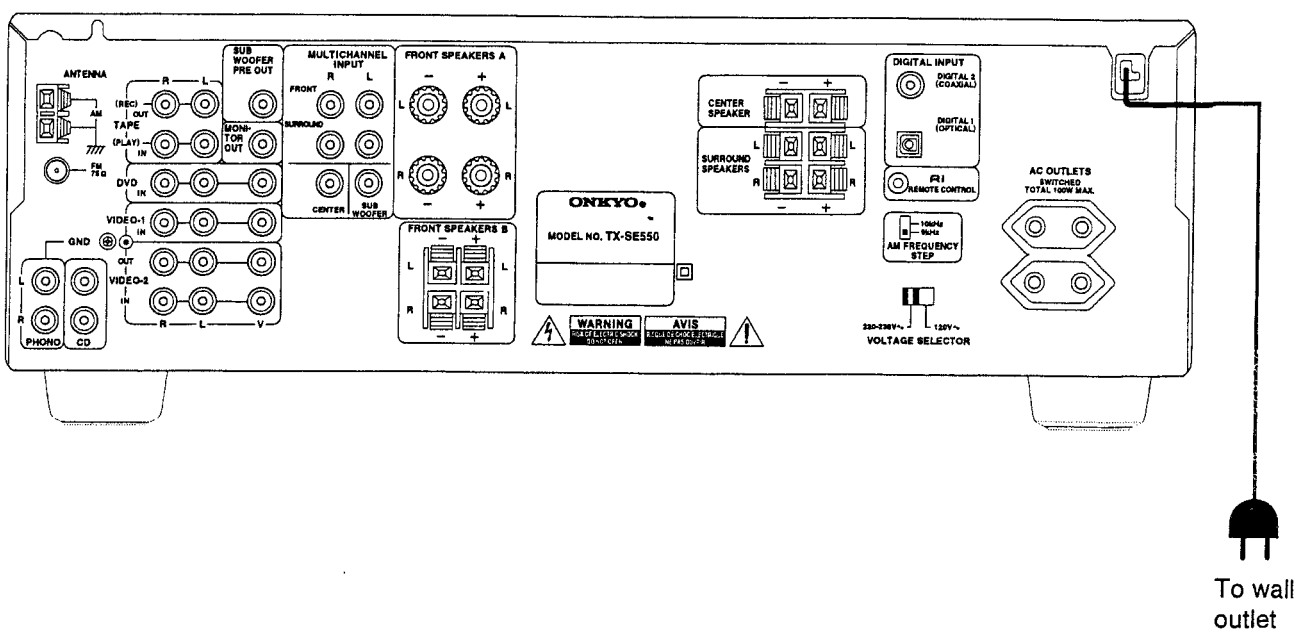

To wall outlet

BLOCK DIAGRAM
TUNER SECTION

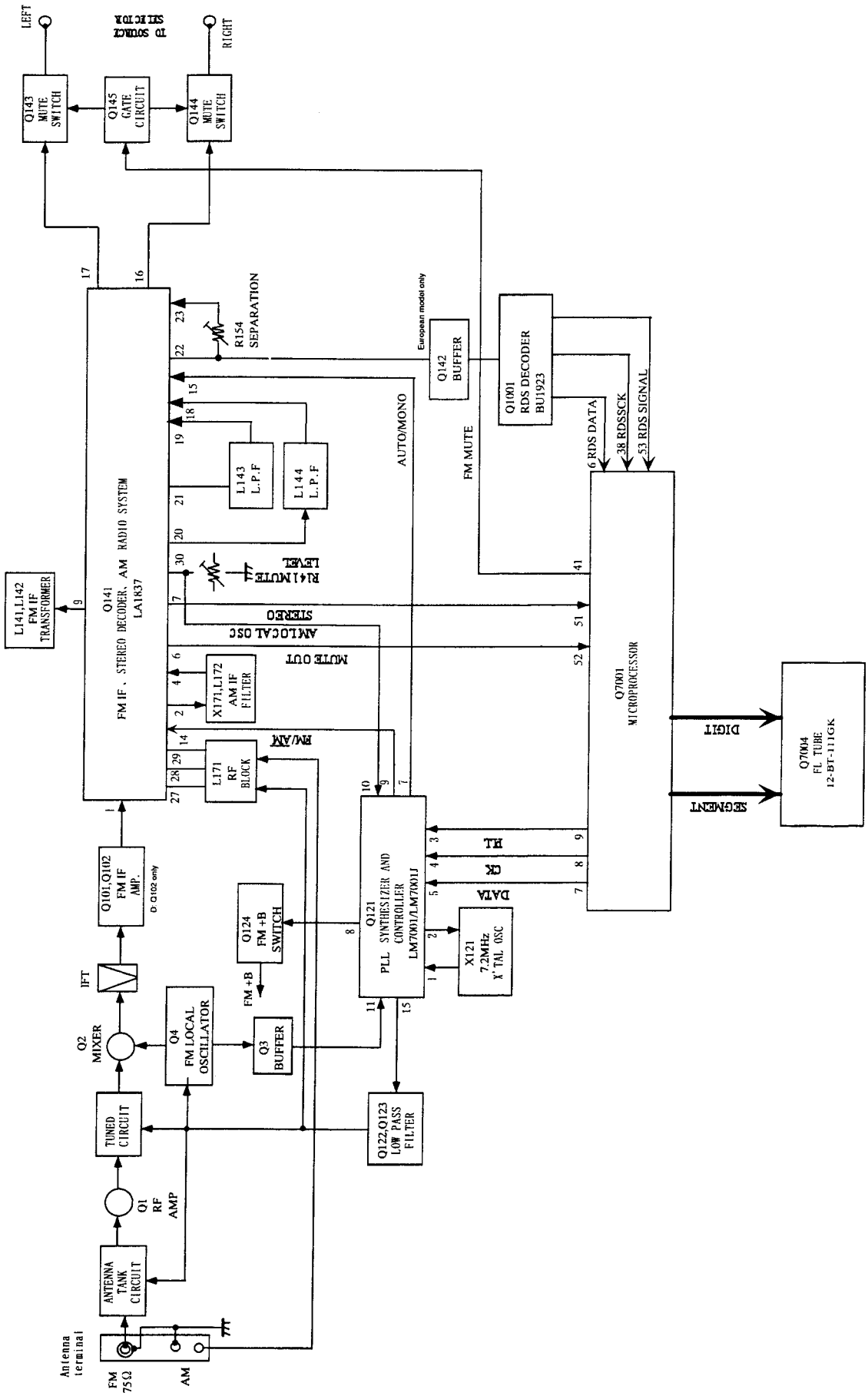

PRINTED CIRCUIT BOARD-PARTS LIST
MODEL TX-SE550

NS : No Spare Part

DISPLAY CIRCUIT PC BOARD (NADIS-6487-4A/4B)

CIRCUIT NO.	PART NO.	DESCRIPTION
	FL tube	
Q7004	212196	12-BT-111GK
	ICs	
Q3001,Q3101	22240581R1	NJM4565M
Q3301,Q3501	22240581R1	NJM4565M
Q7001	22241298	MPD780208GF-048-3BA
Q7301	22241218R3	CS4226-KQ
Q7401	22241219R3 or	DSPF56009FJ88 or
	22241235R3	XCF56009FJ88
Q7402	22241101R2	LC32464M-80
Q7701	22241131R3	TC9409BF001
Q7802	22240581R1	NJM4565M
	Transistors	
Q7002	2214490R2	RN1404
Q7003	2214540R2	RN2403
Q7005,Q7006	2213143R2	2SC2712-O
Q7011,Q7012	2214490R2	RN1404
Q7804,Q7805	2215410R2	RN1441
Q7806	2214490R2	RN1404
	Diodes	
D7001	225290	SEL4110R
D7002,D7003	223233R1 or	1SS355 or
D7005-D7008	223234R2	1SS352
D7004	224490560R2	UDZ5.6B
D7009	224491200R2	UDZ12B
D7010	223233R1 or	1SS355 or
D7301-D7306	223234R2	1SS352
D7401-D7404	223233R1 or	1SS355 or
	223234R2	1SS352
	Coils	
L7001-L7003	231237K220R2	NCH-1477
L7301,L7302	231237K100R2	NCH-1475
L7701,L7702	231237K220R2	NCH-1477
	Remote sensor	
U7001	241305	GP1U281X
	Oscillators	
X7001	3010242T	CST5.00MGW
X7301	3010279	XTL-18.432M
	Capacitors	
C3001,C3002	355744709	47μF,16V,Elect.
C3101,C3201	355741009	10μF,16V,Elect.
C3103,C3203	374723324	3300pF±5%,50V,Plastic
C3104,C3204	374721524	1500pF±5%,50V,Plastic
C3105,C3205	374721024	1000pF±5%,50V,Plastic
C3301,C3401	355741009	10μF,16V,Elect.
C3303,C3403	374723324	3300pF±5%,50V,Plastic
C3304,C3404	374721524	1500pF±5%,50V,Plastic
C3305,C3405	374721024	1000pF±5%,50V,Plastic
C3501,C3601	355741009	10μF,16V,Elect.
C3503,C3603	374723324	3300pF±5%,50V,Plastic
C3504,C3604	374721524	1500pF±5%,50V,Plastic
C3505,C3605	374721024	1000pF±5%,50V,Plastic
C7001	355780109	1μF,50V,Elect.
C7002	3000078T	DX-5R5L104,Super
C7004,C7005	355721019	100μF,6.3V,Elect.
C7008,C7017	355721019	100μF,6.3V,Elect.
C7009,C7010	355780109	1μF,50V,Elect.
C7019	355741009	10μF,16V,Elect.
C7020	355721019	100μF,6.3V,Elect.
C7021	375524744	0.47μF±5%,50V,Plastic
C7023	354721029	1000μF,6.3V,Elect.
C7302	374728224	8200pF±5%,50V,Plastic
C7303,C7405	374721044	0.1μF±5%,50V,Plastic
	Capacitors	
C7312,C7409	355721019	100μF,6.3V,Elect.
C7319	375524744	0.47μF±5%,50V,Plastic
C7414,C7416	355741009	10μF,16V,Elect.
C7703,C7704	355721019	100μF,6.3V,Elect.
C7706,C7710	355721019	100μF,6.3V,Elect.
C7801	354741009	10μF,16V,Elect.
C7822,C7824	355780229	2.2μF,50V,Elect.
C7834	355780229	2.2μF,50V,Elect.
	Resistors	
R7811-R7813	5104393	N11RL10KB17Z,Variable
	Push switches	
S7101-S7109	25035652	NPS-111-S604
S7111-S7118	25035652	NPS-111-S604
S7121-S7128	25035652	NPS-111-S604
S7131-S7138	25035652	NPS-111-S604
S7141-S7148	25035652	NPS-111-S604
	Sockets	
JL702A,JL781A	25051089	NSCT-5P876
	Plug	
JL701B	25055624	NPLG-3P586
	Holder	
Q7004B	27190989	(FL)

SURROUND SWITCH PC BOARD (NAAR-6488-4A/4B)

CIRCUIT NO.	PART NO.	DESCRIPTION
	ICs	
Q261,Q281	22240581R1	NJM4565M
Q3141	22240981R2	TC9162AF
Q3151	22241221R2	TC9164AF
Q931	222780565JRC	NJM78M56FA
	Transistor	
Q932	2211455 or	2SA1015-GR or
	2215975 NS	KTA1266-GR
	Diodes	
D3151,D3152	224490620R2	UDZ6.2B
D921	22380285F or	RS403M or
	22380022F	RBV402
D931	224490620R2	UDZ6.2B
D932	223234R2 or	1SS352 or
	223233R1	1SS355
D933-D938	22380260,	RL1N4003,
D940,D941	22380032 or	1SR139-100 or
	22380035	GP104003E
D939	224492700R2	UDZ27B
	Capacitors	
C267,C268	354741009	10μF,16V,Elect.
C269,C270	354721019	100μF,6.3V,Elect.
C273,C274	374728224	8200pF±5%,50V,Plastic
C275,C276	374721824	1800pF±5%,50V,Plastic
C277,C278	354744709	47μF,16V,Elect.
C3141,C3142	354741009	10μF,16V,Elect.
C3151,C3152	354741009	10μF,16V,Elect.
C923	354754729S	4700μF,25V,Elect.
C924	354761029S	1000μF,35V,Elect.
C927,C928	354741009	10μF,16V,Elect.
C933	354741029S	1000μF,16V,Elect.
C935	354741009	10μF,16V,Elect.
C936,C937	354762219	220μF,35V,Elect.
C940,C941	354761019	100μF,35V,Elect.
	Resistors	
R929	441623304F	33Ω±5%,1W,Metal oxide
R934	442522204F	22Ω±5%,1/2W,Metal oxide
R926	452630564F	5.6Ω±5%,1W,Metal

CAUTION: Replacement of the transistor of mark ✱, if necessary, must be made from the same beta group (HFE) as the original type.

CIRCUIT NO.	PART NO.	DESCRIPTION
	Resistors	
R932	453530224F	2.2Ω±5%,1/2W,Metal
R921-R925	453532294	0.22Ω±5%,1/2W,Metal
	Terminal	
P261	25045575 or	NPJ-4PDRW389 or
	25045303	NPJ-4PDBL162
	Sockets	
JL3901A	25051110	NSCT-6P897
JL3902A,JL961A	25051107	NSCT-3P894
JL911A	25051111	NSCT-7P898
P520	25052138	NSCT-7P2036
P7001B	25052049,	NSCT-40P1836,
	25050980,	NSCT-40P767,
	25051306 or	NSCT-40P1095 or
	25051847	NSCT-40P1634
	Plugs	
P102A,P204A	25055705	NPLG-9P661
P103A,P206A	25055804	NPLG-4P760
P205A	25055805	NPLG-16P761
P242A,P305A	25055705	NPLG-9P661
P303A	25055807	NPLG-18P763
P304A	25055708	NPLG-12P664
P306A	25055702	NPLG-6P658

DIGITAL INPUT PC BOARD (NADG-6489-4A/4B)

CIRCUIT NO.	PART NO.	DESCRIPTION
Q7201	222740046R2TO	TC74HCU04F,IC
U7201	24120037	TORX178A,Photo coupler
L7202	231237M022R2	NCH-1471,Coil
C7203	354721019	100μF,6.3V,Elect. capacitor
P7201	25045504	NPJ-1PDBL319,Terminal
P7202	25045473	NPJ-1PDBL291,Terminal
S7201	25065286	NSS-22112,Slide switch <W>
P7203A	2009990527UL	NSAS-10P0692,Socket

HEADPHONE PC BOARD (NAETC-6490-4A/4B)

CIRCUIT NO.	PART NO.	DESCRIPTION
P7003	25045514	YKB26-5005,Headphone terminal
P504	2002381260	NSAS-12P0700,Socket
JL702B	25051089	NSCT-5P876,Socket

VOLUME PC BOARD (NAETC-6491-4A/4B)

CIRCUIT NO.	PART NO.	DESCRIPTION
S7001	25065575	EC16B2425,Rotary encoder
JL701A	25051087	NSCT-3P874,Socket

TONE CONTROL CIRCUIT PC BOARD (NAETC-6492-4A/4B)

CIRCUIT NO.	PART NO.	DESCRIPTION
C391,C392	374721534	0.015μF±5%,50V,Plasticcapacitor
R391,R392	5104356	N14RLC100KWT20Z,Variable resistor
JL391B	25050271	NSCT-7P99,Socket

MIC. INPUT TERMINAL PC BOARD (NAETC-6493-4A/4B)

CIRCUIT NO.	PART NO.	DESCRIPTION
	IC	
Q7801	22240051R2	NJM2068M
	Capacitors	
C7802	354741009	10μF,16V,Elect.
C7809,C7810	354741009	10μF,16V,Elect.
C7805,C7806	374722224	2200pF±5%,50V,Plastic
	Terminal	
P7801,P7802	25045574	YKB22-5176
	Plug	
JL781B	25055626	NPLG-5P588

POWER AMPLIFIER PC BOARD (NAAF-6495-4A/4B)

CIRCUIT NO.	PART NO.		DESCRIPTION
	Transistors		
Q1501,Q1502	2211732,		2SC1845-F,
Q1503,Q1514	2211733,		2SC1845-E,
Q601-Q604	2210755 or		2SC1775A-E or
Q609,Q610	2210756		2SC1775A-F
Q1504,Q1505	2215843 or	NS	KTA1024-O or
Q1507	2211353		2SA949-O
Q1508	2215853 or	NS	KTC3206-O or
Q617,Q618	2211633		2SC2229-O
Q1509,Q1510	2212653 or		2SC3421-O or
Q615,Q616	2212654		2SC3421-Y
Q1511	2212643 or		2SA1358-O or
Q621,Q622	2212644		2SA1358-Y
Q1512	2202253,	*	2SC4467-O,
Q523,Q524	2202254,	*	2SC4467-Y,
Q623,Q624	2202256,	*	2SC4467-P,
	2203042 or	*	2SC5197-R or
	2203043	*	2SC5197-O
Q1513	2202243,	*	2SA1694-O,
Q525,Q526	2202244,	*	2SA1694-Y,
Q625,Q626	2202246,	*	2SA1694-P,
	2203032 or	*	2SA1940-R or
	2203033	*	2SA1940-O
Q1515	2215864,	NS	KTC3199-GR,
Q611,Q612	2212115 or		2SC2458-GR or
	2213284		2SC1740S-R
Q605,Q606	2215843 or	NS	KTA1024-O or
Q613,Q614	2211353		2SA949-O
Q619,Q620	2212653 or		2SC3421-O or
	2212654		2SC3421-Y
Q627,Q628	2211732,		2SC1845-F,
	2211733,		2SC1845-E,
	2210755 or		2SC1775A-E or
	2210756		2SC1775A-F
	2211733,		2SC1845-E,
Q629,Q630	2215843 or	NS	KTA1024-O or
	2211353		2SA949-O
Q691	2215830,	NS	KRC105M,
	2213640 or		DTC123JS or
	2214660		RN1205
	Diodes		
D1501,D1506	223163 or		1SS133 or
D607,D608	223205		1SS270A
D691	223163 or		1SS133 or
	223205		1SS270A
	Coils		
L1501	231176S		S-1.3C
L601,L602	231176S		S-1.3C
	Capacitors		
C1501	354784709		47μF,50V,Elect.
C1502	374721015		100pF±10%,50V,Plastic
C1503	354742219		220μF,16V,Elect.
C1504,C1505	354781009		10μF,50V,Elect.
C1510	374724734		0.047μF±5%,50V,Plastic
C1511	374721044		0.1μF±5%,50V,Plastic
C1512	354744709		47μF,16V,Elect.
C1526	374721034		0.01μF±5%,50V,Plastic
C1530	354780109		1μF,50V,Elect.
C1533,C1534	354781009		10μF,50V,Elect.
C601,C602	354784709		47μF,50V,Elect.
C603,C604	374721015		100pF±10%,50V,Plastic
C605,C606	354744709		47μF,16V,Elect.
C607,C608	354742219		220μF,16V,Elect.

CIRCUIT NO.	PART NO.	DESCRIPTION
	Capacitors	
C615,C616	354781009	10μF,50V,Elect.
C619,C620	354781009	10μF,50V,Elect.
C621,C622	374724734	0.047μF±5%,50V,Plastic
C623,C624	374721044	0.1μF±5%,50V,Plastic
C625,C626	374721034	0.01μF±5%,50V,Plastic
C627,C628	354782219	220μF,50V,Elect.
C631-C634	354784709	47μF,50V,Elect.
C635-C638	354781009	10μF,50V,Elect.
C639,C640	354780109	1μF,50V,Elect.
C681	354781009	10μF,50V,Elect.
	Resistors	
R1512,R1513	443528204	82Ω±5%,1/2W,Metal oxide
R1515	443526804	68Ω±5%,1/2W,Metal oxide
R1516	443528204	82Ω±5%,1/2W,Metal oxide
R1517	443525604	56Ω±5%,1/2W,Metal oxide
R1519	443522214	220Ω±5%,1/2W,Metal oxide
R1522,R1523	453530224	2.2Ω±5%,1/2W,Metal
R1524	4000132 or	0.22Ω×2±5%,5.5W or
	4500245	0.22Ω×2±5%,5.5W,Metal plate
R1529	453630824	8.2Ω±5%,1W,Metal
R1532	5210288	N06HR2.2KBE,Trimming
R1534,R1535	4500159F	0.22Ω±5%,1/4W,Metal
R1570	443525614	560Ω±5%,1/2W,Metal oxide
R623-R626	443528204	82Ω±5%,1/2W,Metal oxide
R629,R630	443525604	56Ω±5%,1/2W,Metal oxide
R633,R634	443526804	68Ω±5%,1/2W,Metal oxide
R635,R636	443528204	82Ω±5%,1/2W,Metal oxide
R641,R642	443522214	220Ω±5%,1/2W,Metal oxide
R643-R646	453530224	2.2Ω±5%,1/2W,Metal
R647,R648	4000132 or	0.22Ω×2±5%,5.5W or
	4500245	0.22Ω×2±5%,5.5W,Metal plate
R655,R656	453630824	8.2Ω±5%,1W,Metal
R659,R660	4500171F	2.2Ω±5%,1/4W,Metal
R673,R674	5210288	N06HR2.2KBE,Trimming
R675-R678	4500159F	0.22Ω±5%,1/4W,Metal
	Sockets	
JL903B	25050268	NSCT-4P96
JL501B	25050282	NSCT-5P110
JL902A	25051108	NSCT-4P895
P601A	2009990466UL	NSAS-10P0620
	Plugs	
P1511	25055038	NPLG-2P29
P611,P612	25055038	NPLG-2P29
	Terminal	
P603	25060287	NTM-6PDML218
	Relays	
RL1501	25065578	NRL-1P5A-DC12-135
RL601	25065522 or	NRL-2P5A-DC20-100 or
	25065582	NRL-2P5A-DC18-138

FRONT CHANNEL POWER AMPLIFIER PC BOARD (NAAF-6496-4A/4B)

CIRCUIT NO.	PART NO.		DESCRIPTION
	Transistors		
Q501-Q506	2211732,		2SC1845-F,
Q527,Q528	2211733,		2SC1845-E,
Q581,Q582	2210755 or		2SC1775A-E or
	2210756		2SC1775A-F
Q507-Q510	2215843 or	NS	KTA1024-O or
Q513,Q514	2211353		2SA949-O
Q515,Q516	2215853 or	NS	KTC3206-O or
	2211633		2SC2229-O

CIRCUIT NO.	PART NO.		DESCRIPTION
	Transistors		
Q519,Q520	2212653 or		2SC3421-O or
	2212654		2SC3421-Y
Q521,Q522	2212643 or		2SA1358-O or
	2212644		2SA1358-Y
Q523,Q524	2202253,	*	2SC4467-O,
	2202254,	*	2SC4467-Y,
	2202256,	*	2SC4467-P,
	2203042 or	*	2SC5197-R or
	2203043	*	2SC5197-O, Transistor
Q525,Q526	2202243,	*	2SA1694-O,
	2202244,	*	2SA1694-Y,
	2202246,	*	2SA1694-P,
	2203032 or	*	2SA1940-R or
	2203033	*	2SA1940-O, Transistor
Q3901	222780125		78M12HF, IC
Q3902	222790125		79M12HF, IC
Q3903	222780065		78M06HF, IC
Q517,Q518	2212654 or		2SC3421-Y or
	2212653		2SC3421-O, Transistor
Q529,Q530	2215864,	NS	KTC3199-GR,
	2212115 or		2SC2458-GR or
	2213284		2SC1740S-R
Q583	2211792 or		2SA992-F or
	2211793		2SA992-E
Q591,Q592	2215830,		KRC105M,
	2213640 or	NS	DTC123JS or
	2214660		RN1205
	Diodes		
D511,D512	223163 or		1SS133 or
D591,D592	223205		1SS270A
D910	22380038 or		
	22380274		
	Coils		
L501	231176S		S-1.3C
L502	231176S		S-1.3C
	Capacitors		
C501,C502	354784709		47μF,50V,Elect.
C5043,C504	374721015		100pF±10%,50V,Plastic
C505,C506	354742219		220μF,16V,Elect.
C507-C510	354781009		10μF,50V,Elect.
C517,C518	374724734		0.047μF±5%,50V,Plastic
C519,C520	374721044		0.1μF±5%,50V,Plastic
C521,C522	354744709		47μF,16V,Elect.
C525,C526	354781019		100μF,50V,Elect.
C535,C536	374721034		0.01μF±5%,50V,Plastic
C581	354721019		100μF,6.3V,Elect.
C905,C906	374721044		0.1μF±5%,50V,Plastic
C915,C916	3504344		10000μF,50V,Elect.
	Resistors		
R521-R524	443528204		82Ω±5%,1/2W,Metal oxide
R525,R526	443526804		68Ω±5%,1/2W,Metal oxide
R527,R528	443528204		82Ω±5%,1/2W,Metal oxide
R529,R530	443525604		56Ω±5%,1/2W,Metal oxide
R539-R542	453530224		2.2Ω±5%,1/2W,Metal
R543,R544	443522214		220Ω±5%,1/2W,Metal oxide
R547,R548	4000132		0.22Ω×2±5%,5.5W,Metal plate
R547,R548	4500245		0.22Ω×2±5%,5.5W,Metal plate
R555,55	453630824		8.2Ω±5%,1W,Metal
R557,R558	443623914		390Ω±5%,1W,Metal oxide
R573,R574	5210259		N06HR2KBC,Trimming
R591,R592	4500171F		2.2Ω±5%,1/4W,Metal

CIRCUIT NO.	PART NO.	DESCRIPTION
	Sockets	
JL902B	25050268	NSCT-4P96
JL903A	25051108	NSCT-4P895
JL501A	25051109	NSCT-5P896
JL501A	25051109	NSCT-5P896
JL503A	25051110	NSCT-6P897
JL901A	25051111	NSCT-7P898
	Plugs	
P511	25055038	NPLG-2P29
P512	25055038	NPLG-2P29
P504A	25055444	NPLG-6P426
P520A	25055913	NPLG-7P866
	Relays	
RL501,RL502	25065522 or 25065582	NRL-2P5A-DC20-100 or NRL-2P5A-DC18-138

VOLUME CIRCUIT PC BOARD (NAVD-6497-4A/4B)

CIRCUIT NO.	PART NO.	DESCRIPTION
	ICs	
Q3181,Q3281	22240247 or	BA15218N or
Q3581,Q4101	22240293	NJM4558L-D
Q3171	22241296	M62447SP
Q4001	22241349	TMP87C408N-1692
Q201	222840661	4066B
	Transistors	
Q202,Q203	2215864, NS 2212115 or 2213284	KTC3199-GR, 2SC2458-GR or 2SC1740S-R
Q204,Q206 Q208,Q3184 Q3185	2215770, NS 2213510 or 2214350	KRA102M, DTA114ES or RN2202
Q205,Q207 Q209,Q4102	2215830, NS 2213640 or 2214660	KRC105M, DTC123JS or RN1205
Q210,Q4203	2215790, NS 2213090 or 2213590	KRA107M, DTA114YS or RN2207
Q3182,Q3282	2211945	2SK246-GR
Q3183,Q3283	2213631 or	RN1241-A or
Q3383,Q3483	2213632	RN1241-B
Q3186,Q4202	2215830, NS 2213640 or 2214660	KRC105M, DTC123JS or RN1205
Q3582	2211945	2SK246-GR
Q3583,Q3683	2213631 or	RN1241-A or
Q3684,Q4104	2213632	RN1241-B
Q4103	2215770, NS 2213510 or 2214350	KRA102M, DTA114ES or RN2202
Q4204	2213631 or 2213632	RN1241-A or RN1241-B
	Diodes	
D201,D202	223163 or	1SS133 or
D3281	223205	1SS270A
D3181,D3281	223163 or	1SS133 or
D3581,D4001	223205	1SS270A
D3276,D3277	224470472	MTZJ4.7B
D3171	224470512	MTZJ5.1B
	Oscillator	
X4001	3010190T	CST8.00MTW
	Capacitors	
C201	354741009	10μF,16V,Elect.
C202	354741019	100μF,16V,Elect.
C203	354721019	100μF,6.3V,Elect.

CIRCUIT NO.	PART NO.	DESCRIPTION
	Tranaitors	
Q143,Q144	2215024 or 2212794	2SD1468S-R or 2SD1468-R
	Diodes	
D101	224470512	MTZJ5.1B
D102	224470913	MTZJ9.1C
	Coils and Transformers	
L141	233457	NFIF-4081
L142	233458	NFIF-4082
L143,L144	233528	NMC-4110
L171	232174	NMRF-5077
L172	232139	NMIF-4062
	Capacitors	
C205,C209	354724719	470μF,6.3V,Elect.
C206,C207	354721019	100μF,6.3V,Elect.
C3171,C3181	354780229	2.2μF,50V,Elect.
C3173,C3175	354741009	10μF,16V,Elect.
C3177,C3186	354741009	10μF,16V,Elect.
C3184 ,C3284	374721044	0.1μF±5%,50V,Plastic
C3185	374721044	0.1μF±5%,50V,Plastic
C3187 ,C3287	374721534	0.015μF±5%,50V,Plastic
C3189,C3271	354780229	2.2μF,50V,Elect.
C3192,C3193	354741009	10μF,16V,Elect.
C3194,C3286	354741009	10μF,16V,Elect.
C3281,C3289	354780229	2.2μF,50V,Elect.
C3285,C3584	374721044	0.1μF±5%,50V,Plastic
C3371 ,C3381	354780229	2.2μF,50V,Elect.
C3384 ,C3471	354780229	2.2μF,50V,Elect.
C3481 ,C3484	354780229	2.2μF,50V,Elect.
C3571 ,C3581	354780229	2.2μF,50V,Elect.
C3586 ,C3671	354780229	2.2μF,50V,Elect.
C3681 ,C3684	354780229	2.2μF,50V,Elect.
C3683	374724734	0.047μF±5%,50V,Plastic
C3685	374721044	0.1μF±5%,50V,Plastic
C4001	354741009	10μF,16V,Elect.
C4003	354780229	2.2μF,50V,Elect.
C4103,C4203	354744709	47μF,16V,Elect.
	Terminals	
P203	25045299	NPJ-3PDYE158
P202	25045315	NPJ-2PDYE172
P201	25045567	NPJ-1PDBL382
	Sockets	
JL391A	25051111	NSCT-7P898
JL4001A,JL4001B	25051108	NSCT-4P895
P204	25051234	NSCT-9P1024
P205	25051527	NSCT-16P1314
P206	25051526	NSCT-4P1313
P7001A	25052086, 25050946, 25051344 or 25051884	NSCT-40P1873, NSCT-40P733, NSCT-40P1133 or NSCT-40P1671
	Plugs	
P601	25055236	NPLG-5P220

NOTE: THE COMPONENTS IDENTIFIDE BY MARK ⚠ ARE CRITICAL FOR RISK OF FIRE AND ELECTRIC SHOCK. REPLACE ONLY WITH PART NUMBER SPECIFIED.

PRIMARY CIRCUIT PC BOARD (NAPS-6498-4A/4B)

CIRCUIT NO.	PART NO.	DESCRIPTION
	Transistor	
Q951	2215830 or NS	KRC105M or
	2213640	DTC123JS
	Diodes	
D955	223163 or	1SS133 or
	223205	1SS270A
D951-D954	22380032,	1SR139-100,
	22380035 or	GP104003E or
	22380260	RL1N4003
	Transformers	
T902	2300671A or !	NPT-1111P or
	2301382 ⚠	NPT-1358P <P>
	2300672A or ⚠	NPT-1111DG or
	2301383 ⚠	NPT-1358DG <W>
	Capacitors	
C901,C902	3500196S ⚠	RE275V-103M
C952	354761019	100μF,35V,Elect.
	Resistor	
R951	453530824	8.2Ω±5%,1/2W,Metal
	Relay	
RL901 or	25065508, ⚠	NRL-1P10A-DC12-093,
	25065515, ⚠	NRL-1P5A-DC12-096,
	25065526 or ⚠	NRL-1P5A-DC12-102 or
	25065561 ⚠	NRL-1P5A-DC12-127
	Sockets	
JL961B	25050267	NSCT-3P95
P903	25051125	NSCT-4P912
	Fuse holders	
F922A	25052133T ⚠	NSCT-1P2031
F933A	25052133T ⚠	NSCT-1P2031 <P>
	Plug	
P901A	25055675	NPLG-2P631
	Switch	
S901	25035550 ⚠	NPS-111-L512P
S902	25065437 ⚠	NSS-22157P <W>

MULTI-CHANNEL TERMINAL PC BOARD (NAAF-6500-4A/4B)

CIRCUIT NO.	PART NO.	DESCRIPTION
	ICs	
Q241-Q243	22240247 or	BA15218N or
	22240293	NJM4558L-D
	Capacitors	
C248,C249	354741009	10μF,16V,Elect.
	Terminal	
P241	25045572	NPJ-6PDBRW387
	Socket	
P242	25051234	NSCT-9P1024

SECONDARY PC BOARD (NAETC-6505-4A/4B)

CIRCUIT NO.	PART NO.	DESCRIPTION
	Resistors	
R991-R993	453530104	1Ω±5%,1/2W,Metal
	Sockets	
JL911B	25050284	NSCT-7P112
JL901B	25051111	NSCT-7P898

SPEAKER TERMINAL PC BOARD (NAETC-6506-4A/4B)

CIRCUIT NO.	PART NO.	DESCRIPTION
	Capacitors	
C561,C562	374721034	0.01μF±5%,50V,Plastic
	Terminals	
P501	25060147	NTM-4PDMN075
P503	25060286	NTM-4PDML217

TUNER PC BOARD (NARF-6509-4A/4B)

CIRCUIT NO.	PART NO.	DESCRIPTION
	Front end	
TU001	240132	ENV172D3G1
	ICs	
Q121	22241076 or	LM7001J or
	22240090	LM7001
Q141	22241151	LA1837
	Transistors	
Q101	2210746	2SC945A-P
Q102	2211732	2SC1845-F
Q122	2212445	2SK365-GR
Q123,Q142	2215864, NS	KTC3199-GR,
	2212115 or	2SC2458-GR or
	2213284	2SC1740S-R
Q124,Q145	2215770, NS	KRA102M,
	2213510 or	DTA114ES or
	2214350	RN2202
Q143,Q144	2215024 or	2SD1468S-R or
	2212794	2SD1468-R
	Diodes	
D101	224470512	MTZJ5.1B
D102	224470913	MTZJ9.1C
	Coils and Transformers	
L141	233457	NFIF-4081
L142	233458	NFIF-4082
L143,L144	233528	NMC-4110
L171	232174	NMRF-5077
L172	232139	NMIF-4062
	Ceramic filters	
X101,X102	3010071	SFE-10.7MA5 RED
X103	3010130	SFE10.7MZ2K
X171	3010123	SFZ450JL
	Crystal	
X121	3010141	XTL-7.2M
	Capacitors	
C002,C142	354741019	100μF,16V,Elect.
C126	374723334	0.033μF±5%,50V,Plastic
C127,C143	354780229	2.2μF,50V,Elect.
C128	354741009	10μF,16V,Elect.
C129	354782299	0.22μF,50V,Elect.
C131	354721019	100μF,6.3V,Elect.
C144	354780479	4.7μF,50V,Elect.
C146	354780109	1μF,50V,Elect.
C147,C167	354784799	0.47μF,50V,Elect.
C148	354780109	1μF,50V,Elect.
C151	354780229	2.2μF,50V,Elect.
C153,C154	374722724	2700pF±5%,50V,Plastic
C155,C156	374721024	1000pF±5%,50V,Plastic
C159,C160	354742209	22μF,16V,Elect.
C161,C162	374721824	1800pF±5%,50V,Plastic <W>
	374721524	1500pF±5%,50V,Plastic <P>
C163,C164	354742209	22μF,16V,Elect.
C169	354744709	47μF,16V,Elect.
C170	374722234	0.022μF±5%,50V,Plastic
C173	374724734	0.047μF±5%,50V,Plastic
C177	354780339	3.3μF,50V,Elect.
C179	354742209	22μF,16V,Elect.
C193	354741009	10μF,16V,Elect.
	Resistors	
R141,R167	5210263	N06HR20KBC,Trimming
	Sockets	
P102	25051234	NSCT-9P1024
P103	25051526	NSCT-4P1313

CIRCUIT NO.	PART NO.	DESCRIPTION
	Plug	
TP141	25055038	NPLG-2P29
	Terminal	
P101	25060285	NTM-2PDML216
	Shield plate	
TU001A	27150437A	

SELECTOR CIRCUIT PC BOARD(NAAF-6510-4A/4B)

CIRCUIT NO.	PART NO.	DESCRIPTION
	ICs	
Q301	22240881	TC9273N-010
Q302.,Q3121	22240247 or	BA15218N or
Q3131,Q3161	22240293	NJM4558L-D
Q3231,Q3261	22240247 or	BA15218N or
Q3321,Q3521	22240293	NJM4558L-D
Q3561,Q3621	22240247 or	BA15218N or
	22240293	NJM4558L-D
	Capacitors	
C3121,C3122	374722244	0.22μF±5%,50V,Plastic
C315,C316	354741009	10μF,16V,Elect.
C317,C318	354784709	47μF,50V,Elect.
C3161,C3261	354744709	47μF,16V,Elect.
C3162,C3163	374721224	1200pF±5%,50V,Plastic
C3164,C3264	374722224	2200pF±5%,50V,Plastic
C3221,C3222	374722244	0.22μF±5%,50V,Plastic
C3262,C3263	374721224	1200pF±5%,50V,Plastic
C3321,C3322	374722244	0.22μF±5%,50V,Plastic
C3421,C3422	374722244	0.22μF±5%,50V,Plastic
C3521,C3522	374722244	0.22μF±5%,50V,Plastic
C3561	354744709	47μF,16V,Elect.
C3562,C3563	374721224	1200pF±5%,50V,Plastic
C3564	374722224	2200pF±5%,50V,Plastic
C3621	374721034	0.01μF±5%,50V,Plastic
C3622	374724734	0.047μF±5%,50V,Plastic
C3623	374721244	0.12μF±5%,50V,Plastic
C3624	374722234	0.022μF±5%,50V,Plastic
C3625	374722244	0.22μF±5%,50V,Plastic
	Terminals	
P301,P302	25045571 or	NPJ-6PDRW386 or
	25045300	NPJ-6PDBL159
	Sockets	
P303	25051529	NSCT-18P1316
P304	25051237	NSCT-12P1027
P305	25051234	NSCT-9P1024
P306	25051231	NSCT-6P1021

REGULATOR PC BOARD (NAPS-6534-4A/4B)

CIRCUIT NO.	PART NO.	DESCRIPTION
Q3901	222780125	78M12HF, IC
Q3902	222790125	79M12HF, IC
Q3903	222780065	78M06HF, IC
C3904-C3906	354741009	10μF,16V,Elect.capacitor
JL3901B	25050270	NSCT-6P98,Socket
JL3902B	25050267	NSCT-3P95,Socket

PRINTED CIRCUIT BOARD-PARTS LIST

MODEL TX-DS474

NS : No Spare Part

DISPLAY CIRCUIT PC BOARD (NADIS-6487-3A/3B/3C/3D)

CIRCUIT NO.	PART NO.	DESCRIPTION
	FL tube	
Q7004	212196	12-BT-111GK
	ICs	
Q1001	22241297R2	BU1923F <P>
Q3001,Q3101	22240581R1	NJM4565M
Q3301,Q3501	22240581R1	NJM4565M
Q7001	22241351	MPD780206GF-051
Q7301	22241218R3	CS4226-KQ
Q7401	22241219R3 or	DSPF56009FJ88 or
	22241235R3	XCF56009FJ88
Q7402	22241101R2	LC32464M-80
	Remote sensor	
U7001	241305	GP1U281X
	Transistors	
Q7002	2214490R2	RN1404
Q7003	2214540R2	RN2403
Q7005,Q7006	2213143R2	2SC2712-O
	Diodes	
D1001	223234R2 or	1SS352 or
	223233R1	1SS355 <P>
D7001	225290	SEL4110R
D7002,D7003	223233R1 or	1SS355 or
D7005-D7008	223234R2	1SS352
D7004	224490560R2	UDZ5.6B
D7009	224491200R2	UDZ12B
D7010	223233R1 or	1SS355 or
D7301-D7306	223234R2	1SS352
D7401-D7404	223233R1 or	1SS355 or
	223234R2	1SS352
	Coils	
L7001-L7003	231237K220R2	NCH-1477
L7301,L7302	231237K100R2	NCH-1475
L7701,L7702	231237K220R2	NCH-1477
	Oscillators	
X1001	3010203	AF6146CG <P>
X7001	3010242	CST5.00MGW
X7301	3010279	XTL-18.432M
	Capacitors	
C1001	354780229	2.2μF,50V,Elect. <P>
C1003	354721019	100μF,6.3V,Elect. <P>
C7023	354721029	1000μF,6.3V,Elect.
C7302	374728224	8200pF±5%,50V,Plastic
C7303,C7405	374721044	0.1μF±5%,50V,Plastic
C7312,C7409	355721019	100μF,6.3V,Elect.
C7319	375524744	0.47μF±5%,50V,Plastic
C7414,C7416	355741009	10μF,16V,Elect.
	Sockets	
JL702A	25051089	NSCT-5P876
P7203A	2009990528UL	NSAS-12P0693 <W>
	Plug	
JL701B	25055624	NPLG-3P586
	Push switches	
S7101-S7104	25035652	NPS-111-S604
S7108	25035652	NPS-111-S604
S7111-S7118	25035652	NPS-111-S604
S7124-S7128	25035652	NPS-111-S604
S7131-S7137	25035652	NPS-111-S604
S7147,S7148	25035652	NPS-111-S604
	Holder	
Q7004B	27190989	(FL)

SURROUND SWITCH PC BOARD (NAAR-6488-3A/3B/3C/3D)

CIRCUIT NO.	PART NO.	DESCRIPTION
	ICs	
Q261,Q281	22240581R1	NJM4565M
Q3141	22240981R2	TC9162AF
Q3151	22241221R2	TC9164AF
Q931	222780565JRC	NJM78M56FA
	Transistors	
Q932	2211455 or	2SA1015-GR or
Q932 or	2215975	NS KTA1266-GR
	Diodes	
D3151,D3152	224490620R2	UDZ6.2B
D921	22380285F or	RS403M or
	22380022F	RBV402
D931	224490620R2	UDZ6.2B
D932	223234R2 or	1SS352 or
	223233R1	1SS355
D933-D938	22380260,	RL1N4003,
D940,D941	22380032 or	1SR139-100 or
	22380035	GP104003E
D939	224492700R2	UDZ27B
	Capacitors	
C267,C268	354741009	10μF,16V,Elect.
C269,C270	354721019	100μF,6.3V,Elect.
C273,C274	374728224	8200pF±5%,50V,Plastic
C275,C276	374721824	1800pF±5%,50V,Plastic
C277,C278	354744709	47μF,16V,Elect.
C3141,C3142	354741009	10μF,16V,Elect.
C3151,C3152	354741009	10μF,16V,Elect.
C923	354754729	4700μF,25V,Elect.
C924	354761029	1000μF,35V,Elect.
C927,C928	354741009	10μF,16V,Elect.
C933	354741029	1000μF,16V,Elect.
C935	354741009	10μF,16V,Elect.
C936,C937	354762219	220μF,35V,Elect.
C940,C941	354761019	100μF,35V,Elect.
	Resistors	
R921-R925	453532294	0.22Ω±5%,1/2W,Metal
R926	452630564	5.6Ω±5%,1W,Metal
R929	441623304	33Ω±5%,1W,Metal oxide
R932	453530224	2.2Ω±5%,1/2W,Metal
R933	452630104	1Ω±5%,1W,Metal <D>
	452630224	2.2Ω±5%,1W,Metal <P/W/T/A>
R934	442522204	22Ω±5%,1/2W,Metal oxide
	Terminal	
P261	25045575 or	NPJ-4PDRW389 or
	25045303	NPJ-4PDBL162
	Sockets	
JL3901A	25051110	NSCT-6P897
JL3902A,JL961A	25051107	NSCT-3P894
JL911A	25051111	NSCT-7P898
P520	25052138	NSCT-7P2036
P7001B	25052049,	NSCT-40P1836,
	25050980,	NSCT-40P767,
	25051306 or	NSCT-40P1095 or
	25051847	NSCT-40P1634
	Plugs	
P102A,P204A	25055705	NPLG-9P661
P103A,P206A	25055804	NPLG-4P760
P205A	25055805	NPLG-16P761
P242A,P305A	25055705	NPLG-9P661
P303A	25055807	NPLG-18P763
P304A	25055708	NPLG-12P664

CAUTION: Replacement of the transistor of mark ✱, if necessary, must be made from the same beta group (HFE) as the original type.

DIGITAL INPUT PC BOARD (NADG-6489-3A/3B/3C/3D)

CIRCUIT NO.	PART NO.	DESCRIPTION
Q7201	222740046R2O	TC74HCU04F,IC
U7201	24120037	TORX178A,Photo coupler
L7202	231237M022R2	NCH-1471,Coil
C7203	354721019	100μF,6.3V,Elect. Capacitor
P7203A	2009990527UL	NSAS-10P0692,Socket <D/P/T/A>
P7201	25045504	NPJ-1PDBL319,Terminal
P7202	25045473	NPJ-1PDBL291,Terminal
S7201	25065286	NSS-22112,Slide switch <W>

HEADPHONE PC BOARD (NAETC-6490-3A/3B/3C/3D)

CIRCUIT NO.	PART NO.	DESCRIPTION
P7003	25045514	YKB26-5005,Headphone terminal
JL702B	25051089	NSCT-5P876,Socket
P504	2002381260	NSAS-12P0700,Socket

VOLUME PC BOARD (NAETC-6491-3A/3B/3C/3D)

CIRCUIT NO.	PART NO.	DESCRIPTION
S7001	25065575	EC16B2425,Rotary encoder
JL701A	25051087	NSCT-3P874,Socket

TONE CONTROL CIRCUIT PC BOARD (NAETC-6492-3A/3B/3C/3D)

CIRCUIT NO.	PART NO.	DESCRIPTION
R391,R392	5104356	N14RLC100KWT20Z,Variable resistor
JL391B	25050271	NSCT-7P99,Socket

POWER AMPLIFIER PC BOARD (NAAF-6495-3A/3B/3C/3D)

CIRCUIT NO.	PART NO.	DESCRIPTION
	Transistors	
Q1501,Q1502	2211732,	2SC1845-F,
Q1503,Q1514	2211733,	2SC1845-E,
Q601-Q604	2210755 or	2SC1775A-E or
Q609,Q610	2210756	2SC1775A-F
Q1504,Q1505	2215843 or	NS KTA1024-O or
Q1507	2211353	2SA949-O
Q1508	2215853 or	NS KTC3206-O or
Q617,Q618	2211633	2SC2229-O
Q1509,Q1510	2212653 or	2SC3421-O or
Q615,Q616	2212654	2SC3421-Y
Q1511	2212643 or	2SA1358-O or
Q621,Q622	2212644	2SA1358-Y
Q1512	2202253,	* 2SC4467-O,
Q623,Q624	2202254,	* 2SC4467-Y,
	2202256,	* 2SC4467-P,
	2203042 or	* 2SC5197-R or
	2203043	* 2SC5197-O, Transistor
Q1513	2202243,	* 2SA1694-O,
Q625,Q626	2202244,	* 2SA1694-Y,
	2202246,	* 2SA1694-P,
	2203032 or	* 2SA1940-R or
	2203033	* 2SA1940-O, Transistor
Q1515	2215864,	NS KTC3199-GR,
Q611,Q612	2212115 or	2SC2458-GR or
	2213284	2SC1740S-R
Q605,Q606	2215843 or	NS KTA1024-O or
Q613,Q614	2211353	2SA949-O
Q619,Q620	2212653 or	2SC3421-O or
	2212654	2SC3421-Y
Q627,Q628	2211732,	2SC1845-F,
	2211733,	2SC1845-E,
	2210755 or	2SC1775A-E or
	2210756	2SC1775A-F
	2211733,	2SC1845-E,

CIRCUIT NO.	PART NO.	DESCRIPTION
	Transistors	
Q629,Q630	2215843 or	NS KTA1024-O or
	2211353	2SA949-O
Q691	2215830,	NS KRC105M,
	2213640 or	DTC123JS or
	2214660	RN1205
	Diodes	
D1501,D1506	223163 or	1SS133 or
D607,D608	223205	1SS270A
D691	223163 or	1SS133 or
	223205	1SS270A
	Coils	
L1501	231176S	S-1.3C
L601,L602	231176S	S-1.3C
	Capacitors	
C1501	354784709	47μF,50V,Elect.
C1502	374721015	100pF±10%,50V,Plastic
C1503	354742219	220μF,16V,Elect.
C1504,C1505	354781009	10μF,50V,Elect.
C1510	374724734	0.047μF±5%,50V,Plastic
C1511	374721044	0.1μF±5%,50V,Plastic
C1512	354744709	47μF,16V,Elect.
C1526	374721034	0.01μF±5%,50V,Plastic <P/W/T/A>
C1530	354780109	1μF,50V,Elect.
C1533,C1534	354781009	10μF,50V,Elect.
C601,C602	354784709	47μF,50V,Elect.
C603,C604	374721015	100pF±10%,50V,Plastic
C605,C606	354744709	47μF,16V,Elect.
C607,C608	354742219	220μF,16V,Elect.
C615,C616	354781009	10μF,50V,Elect.
C619,C620	354781009	10μF,50V,Elect.
C621,C622	374724734	0.047μF±5%,50V,Plastic
C623,C624	374721044	0.1μF±5%,50V,Plastic
C625,C626	374721034	0.01μF±5%,50V,Plastic <P/W/T/A>
C627,C628	354782219	220μF,50V,Elect.
C631-C634	354784709	47μF,50V,Elect.
C635-C638	354781009	10μF,50V,Elect.
C639,C640	354780109	1μF,50V,Elect.
C681	354781009	10μF,50V,Elect.
	Resistors	
R1512,R1513	443528204	82Ω±5%,1/2W,Metal oxide
R1515	443526804	68Ω±5%,1/2W,Metal oxide
R1516	443528204	82Ω±5%,1/2W,Metal oxide
R1517	443525604	56Ω±5%,1/2W,Metal oxide
R1519	443522214	220Ω±5%,1/2W,Metal oxide
R1522,R1523	453530224	2.2Ω±5%,1/2W,Metal
R1524	4000132 or	0.22Ω×2±5%,5.5W or
	4500245	0.22Ω×2±5%,5.5W,Metal plate
R1529	453630824	8.2Ω±5%,1W,Metal
R1532	5210288	N06HR2.2KBE,Trimming
R1534,R1535	4500159F	0.22Ω±5%,1/4W,Metal
R1570	443525614	560Ω±5%,1/2W,Metal oxide
R623-R626	443528204	82Ω±5%,1/2W,Metal oxide
R629,R630	443525604	56Ω±5%,1/2W,Metal oxide
R633,R634	443526804	68Ω±5%,1/2W,Metal oxide
R635,R636	443528204	82Ω±5%,1/2W,Metal oxide
R641,R642	443522214	220Ω±5%,1/2W,Metal oxide
R643-R646	453530224	2.2Ω±5%,1/2W,Metal
R647,R648	4000132 or	0.22Ω×2±5%,5.5W or
	4500245	0.22Ω×2±5%,5.5W,Metal plate
R655,R656	453630824	8.2Ω±5%,1W,Metal
R659,R660	4500171F	2.2Ω±5%,1/4W,Metal
R673,R674	5210288	N06HR2.2KBE,Trimming
R675-R678	4500159F	0.22Ω±5%,1/4W,Metal

CIRCUIT NO.	PART NO.	DESCRIPTION
	Sockets	
JL903B	25050268	NSCT-4P96
JL501B	25050282	NSCT-5P110
JL902A	25051108	NSCT-4P895
P601A	2009990466UL	NSAS-10P0620
	Plugs	
P1511	25055038	NPLG-2P29
P611,P612	25055038	NPLG-2P29
	Terminal	
P603	25060287	NTM-6PDML218
	Relays	
RL1501	25065578	NRL-1P5A-DC12-135
RL601	25065522 or	NRL-2P5A-DC20-100 or
	25065582	NRL-2P5A-DC18-138

FRONT CHANNEL POWER AMPLIFIER PC BOARD (NAAF-6496-3A/3B/3C/3D)

CIRCUIT NO.	PART NO.	DESCRIPTION
	Transistors	
Q501-Q506	2211732,	2SC1845-F,
Q527,Q528	2211733,	2SC1845-E,
Q581,Q582	2210755 or	2SC1775A-E or
	2210756	2SC1775A-F
Q507-Q510	2215843 or	NS KTA1024-O or
Q513,Q514	2211353	2SA949-O
Q515,Q516	2215853 or	NS KTC3206-O or
	2211633	2SC2229-O
Q517,Q518	2212654 or	2SC3421-Y or
	2212653	2SC3421-O
Q519,Q520	2212653 or	2SC3421-O or
	2212654	2SC3421-Y
Q521,Q522	2212643 or	2SA1358-O or
	2212644	2SA1358-Y
Q523,Q524	2202253,	* 2SC4467-O,
	2202254,	* 2SC4467-Y,
	2202256,	* 2SC4467-P,
	2203042 or	* 2SC5197-R or
	2203043	* 2SC5197-O, Transistor
Q525,Q526	2202243,	* 2SA1694-O,
	2202244,	* 2SA1694-Y,
	2202246,	* 2SA1694-P,
	2203032 or	* 2SA1940-R or
	2203033	* 2SA1940-O, Transistor
Q529,Q530	2215864,	KTC3199-GR,
	2212115 or	2SC2458-GR or
	2213284	2SC1740S-R
Q583	2211792 or	2SA992-F or
	2211793	2SA992-E
Q591,Q592	2215830,	NS KRC105M,
	2213640 or	DTC123JS or
	2214660	RN1205
	Diodes	
D511,D512	223163 or	1SS133 or
D591,D592	223205	1SS270A
D910	22380038 or	RBV602 or
	22380274	RS603M
	Coils	
L501,L502	231176S	S-1.3C
	Capacitors	
C501,C502	354784709	47μF,50V,Elect.
C5043,C504	374721015	100pF±10%,50V,Plastic
C505,C506	354742219	220μF,16V,Elect.
C507-C510	354781009	10μF,50V,Elect.
C517,C518	374724734	0.047μF±5%,50V,Plastic

CIRCUIT NO.	PART NO.	DESCRIPTION
	Capacitors	
C519,C520	374721044	0.1μF±5%,50V,Plastic
C521,C522	354744709	47μF,16V,Elect.
C525,C526	354781019	100μF,50V,Elect.
C535,C536	374721034	0.01μF±5%,50V,Plastic <P/T/W/A>
C563,C564	374721034	0.01μF±5%,50V,Plastic <P/W/T/A>
C581	354721019	100μF,6.3V,Elect.
C905,C906	374721044	0.1μF±5%,50V,Plastic
C915,C916	3504344	10000μF,50V,Elect.
	Resistors	
R521-R524	443528204	82Ω±5%,1/2W,Metal oxide
R525,R526	443526804	68Ω±5%,1/2W,Metal oxide
R527,R528	443528204	82Ω±5%,1/2W,Metal oxide
R529,R530	443525604	56Ω±5%,1/2W,Metal oxide
R539-R542	453530224	2.2Ω±5%,1/2W,Metal
R543,R544	443522214	220Ω±5%,1/2W,Metal oxide
R547,R548	4000132 or	0.22Ω×2±5%,5.5W or
	4500245	0.22Ω×2±5%,5.5W,Metal plate
R555,R556	453630824	8.2Ω±5%,1W,Metal
R557,R558	443623914	390Ω±5%,1W,Metal oxide
R573,R574	5210259	N06HR2KBC,Trimming
R591,R592	4500171F	2.2Ω±5%,1/4W,Metal
	Sockets	
JL501A	25051109	NSCT-5P896
JL901A	25051111	NSCT-7P898
JL902B	25050268	NSCT-4P96
JL903A	25051108	NSCT-4P895
	Plugs	
P504A	25055444	NPLG-6P426
P511	25055038	NPLG-2P29
P512	25055038	NPLG-2P29
P520A	25055913	NPLG-7P866
	Terminal	
P502	25060288	NTM-8PDML219
	Relays	
RL501,RL502	25065522 or	NRL-2P5A-DC20-100 or
RL502 or	25065582	NRL-2P5A-DC18-138

VOLUME CIRCUIT PC BOARD (NAVD-6497-3A/3B/3C/3D)

CIRCUIT NO.	PART NO.	DESCRIPTION
	ICs	
Q3181,Q3281	22240247 or	BA15218N or
Q3581,Q4101	22240293	NJM4558L-D
Q3171	22241296	M62447SP
Q201	222840661	4066B
	Transistors	
Q202,Q203	2215864,	NS KTC3199-GR,
	2212115 or	2SC2458-GR or
	2213284	2SC1740S-R
Q204,Q206	2215770,	NS KRA102M,
Q208,Q3184	2213510 or	DTA114ES or
Q3185	2214350	RN2202
Q205,Q207	2215830,	NS KRC105M,
Q209,Q4102	2213640 or	DTC123JS or
	2214660	RN1205
Q210,Q4203	2215790,	NS KRA107M,
	2213090 or	DTA114YS or
	2213590	RN2207
Q3183,Q3283	2213631 or	RN1241-A or
Q3383,Q3483	2213632	RN1241-B
Q3583,Q3683	2213631 or	RN1241-A or
Q3684,Q4104	2213632	RN1241-B

NOTE: THE COMPONENTS IDENTIFIDE BY MARK ⚠ ARE CRITICAL FOR RISK OF FIRE AND ELECTRIC SHOCK. REPLACE ONLY WITH PART NUMBER SPECIFIED.

CIRCUIT NO.	PART NO.	DESCRIPTION
	Transistor	
Q4103	2215770,	KRA102M,
	2213510 or	DTA114ES or
	2214350	RN2202
Q4204	2213631 or	RN1241-A or
	2213632	RN1241-B
	Diodes	
D201,D202	223163 or	1SS133 or
D3281	223205	1SS270A
D3276,D3277	224470472	MTZJ4.7B
D3171	224470512	MTZJ5.1B
	Capacitors	
C201,C202	354741009	10μF,16V,Elect.
C203	354721019	100μF,6.3V,Elect.
C205,C209	354724719	470μF,6.3V,Elect.
C206,C207	354721019	100μF,6.3V,Elect.
C3171,C3181	354780229	2.2μF,50V,Elect.
C3173,C3175	354741009	10μF,16V,Elect.
C3177,C3186	354741009	10μF,16V,Elect.
C3187 ,C3287	374721534	0.015μF±5%,50V,Plastic
C3189,C3271	354780229	2.2μF,50V,Elect.
C3192,C3193	354741009	10μF,16V,Elect.
C3194,C3286	354741009	10μF,16V,Elect.
C3281,C3289	354780229	2.2μF,50V,Elect.
C3371 ,C3381	354780229	2.2μF,50V,Elect.
C3384 ,C3471	354780229	2.2μF,50V,Elect.
C3481 ,C3484	354780229	2.2μF,50V,Elect.
C3571 ,C3581	354780229	2.2μF,50V,Elect.
C3586 ,C3671	354780229	2.2μF,50V,Elect.
C3681 ,C3684	354780229	2.2μF,50V,Elect.
C3683	374724734	0.047μF±5%,50V,Plastic
C3685	374721044	0.1μF±5%,50V,Plastic <P/T/W/A>
C4103,C4203	354744709	47μF,16V,Elect.
	Terminals	
P203	25045299	NPJ-3PDYE158
P202	25045315	NPJ-2PDYE172
P201	25045567	NPJ-1PDBL382
	Sockets	
JL391A	25051111	NSCT-7P898
JL4001A,JL40(	25051108	NSCT-4P895
P204	25051234	NSCT-9P1024
P206	25051526	NSCT-4P1313
P205	25051527	NSCT-16P1314
P7001A	25052086,	NSCT-40P1873,
	25050946,	NSCT-40P733,
	25051344 or	NSCT-40P1133 or
	25051884	NSCT-40P1671
	Plugs	
P601	25055236	NPLG-5P220

PRIMARY CIRCUIT PC BOARD (NAPS-6498-3A/3B/3C/3D)

CIRCUIT NO.	PART NO.	DESCRIPTION
	Transistor	
Q951	2215830 or	NS KRC105M or
Q951 or	2213640	DTC123JS
	Diodes	
D951-D954	22380032,	1SR139-100,
	22380035 or	GP104003E or
	22380260	RL1N4003 <P/W/T/A>
D955	223163 or	1SS133 or
	223205	1SS270A

CIRCUIT NO.	PART NO.	DESCRIPTION
	Transformers	
T902	2301258 or	⚠ NPT-1294D or
	2301381	⚠ NPT-1358D <D>
	2300671A or	⚠ NPT-1111P or
	2301382	⚠ NPT-1358P <P/T/A>
	2300672A or	⚠ NPT-1111DGor
	2301383	⚠ NPT-1358DG <W>
	Capacitors	
C901,C902	3500196	⚠ RE275V-103M
C952	354761019	100μF,35V,Elect.
	Resistors	
R901	431533355	⚠ 3.3MΩ±20%,1/2W,Solid <D>
R951	453530824	8.2Ω±5%,1/2W,Metal
	Sockets	
JL961B	25050267	NSCT-3P95
P903	25051125	⚠ NSCT-4P912 <P/W/T>
	25051126	⚠ NSCT-4P913 <D>
	25052115	⚠ NSCT-2P2013,AC outlet <A>
	Fuse holders	
F911A	25052133	⚠ NSCT-1P2031 <D/W>
F922A	25052133	⚠ NSCT-1P2031 <P/W/T/A>
F933A	25052133	⚠ NSCT-1P2031 <P/T>
	Plug	
P901A	25055675	⚠ NPLG-2P631
	Switch	
S901	25035550	⚠ NPS-111-L512P
S902	25065437	⚠ NSS-22157P <W>
	Relay	
RL901	25065508,	⚠ NRL-1P10A-DC12-093,
	25065515,	⚠ NRL-1P5A-DC12-096,
	25065526 or	⚠ NRL-1P5A-DC12-102 or
	25065561	⚠ NRL-1P5A-DC12-127
	Fuses	
F911	252166	⚠ 6.3A-UL/T-237,Fuse <D>
	252198	⚠ 8A-UL, Fuse <W>
F922	252077 or	⚠ 4A-SE-EAK or
	252243	⚠ 4A-SE-EAK,Fuse <P/W/A>
F933	252075 or	⚠ 2.5A-SE-EAK or
	252241	⚠ 2.5A-SE-EAK, Fuse <P>
	Fuse label	
F911A	29362027	6.3A/125V <D>

MULTI-CHANNEL TERMINAL PC BOARD(NAAF-6500-3A/3B/3C/3D)

CIRCUIT NO.	PART NO.	DESCRIPTION
	ICs	
Q241-Q243	22240247 or	BA15218N or
	22240293	NJM4558L-D
	Capacitors	
C248,C249	354741009	10μF,16V,Elect.
	Terminal	
P241	25045572	NPJ-6PDBRW387
	Socket	
P242	25051234	NSCT-9P1024

SECONDARY PC BOARD (NAETC-6505-3A/3B/3C/3D)

CIRCUIT NO.	PART NO.	DESCRIPTION
	Resistors	
R991-R993	453530104	⚠ 1Ω±5%,1/2W,Metal
	Sockets	
JL911B	25050284	NSCT-7P112
JL901B	25051111	NSCT-7P898

TUNER PC BOARD (NARF-6509-3A/3B/3C/3D)

CIRCUIT NO.	PART NO.	DESCRIPTION
	Front end	
TU001	240131	ENV172D4G1 <D>
	240132	ENV172D3G1 <P/W/T/A>
	ICs	
Q121	22241076 or	LM7001J or
	22240090	LM7001
Q141	22241151	LA1837
	Transistors	
Q101	2210746	2SC945A-P <P/W/T/A>
Q102	2211732	2SC1845-F
Q122	2212445	2SK365-GR
Q123,Q142	2215864, NS	KTC3199-GR,
	2212115 or	2SC2458-GR or
	2213284	2SC1740S-R
Q124,Q145	2215770, NS	KRA102M,
	2213510 or	DTA114ES or
	2214350	RN2202
Q143,Q144	2215024 or	2SD1468S-R or
	2212794	2SD1468-R
	Diodes	
D101	224470512	MTZJ5.1B
D102	224470913	MTZJ9.1C
	Coils and Transformers	
L141	233457	NFIF-4081
L142	233458	NFIF-4082 <P/W/T/A>
L143,L144	233528	NMC-4110 <P/W/T/A>
L145,L146	231092	NCH-2140 <D>
L171	232174	NMRF-5077
L172	232139	NMIF-4062
	Ceramic filters	
X101	3010071	SFE-10.7MA5 RED
X102	3010071	SFE-10.7MA5 RED <P/W/T/A>
X103	3010071	SFE-10.7MA5 RED <D>
X171	3010123	SFZ450JL
X103	3010130	SFE10.7MZ2K <P/W/T/A>
	Crystal	
X121	3010141	XTL-7.2M
	Capacitors	
C002,C142	354741019	100μF,16V,Elect.
C126	374723334	0.033μF±5%,50V,Plastic
C127,C143	354780229	2.2μF,50V,Elect.
C128	354741009	10μF,16V,Elect.
C129	354782299	0.22μF,50V,Elect.
C131	354721019	100μF,6.3V,Elect.
C144	354780479	4.7μF,50V,Elect.
C146	354780109	1μF,50V,Elect.
C147,C167	354784799	0.47μF,50V,Elect.
C148	354780109	1μF,50V,Elect.
C151	354780229	2.2μF,50V,Elect.
C153,C154	374722724	2700pF±5%,50V,Plastic <P/T/W/A>
C155,C156	374721024	1000pF±5%,50V,Plastic
C157,C158	374721024	1000pF±5%,50V,Plastic <D>
C159,C160	354742209	22μF,16V,Elect.
C161,C162	374721824	1800pF±5%,50V,Plastic <W>
C161,C162	374721524	1500pF±5%,50V,Plastic <P/T/A>
C161,C162	374723324	3300pF±5%,50V,Plastic <D>
C163,C164	354742209	22μF,16V,Elect.
C169	354744709	47μF,16V,Elect.
C170	374722234	0.022μF±5%,50V,Plastic
C173	374724734	0.047μF±5%,50V,Plastic
C177	354780339	3.3μF,50V,Elect.
C179	354742209	22μF,16V,Elect.
C193	354741009	10μF,16V,Elect.

CIRCUIT NO.	PART NO.	DESCRIPTION
	Resistors	
R141,R167	5210263	N06HR20KBC,Trimming
	Sockets	
P102	25051234	NSCT-9P1024
P103	25051526	NSCT-4P1313
	Plug	
TP141	25055038	NPLG-2P29
	Terminal	
P101	25060285	NTM-2PDML216
	Shield plate	
TU001A	27150437A	

SELECTOR CIRCUIT PC BOARD(NAAF-6510-3A/3B/3C/3D)

CIRCUIT NO.	PART NO.	DESCRIPTION
	ICs	
Q301	22240881	TC9273N-010
Q302.,Q3121	22240247 or	BA15218N or
Q3131,Q3161	22240293	NJM4558L-D
Q3231,Q3261	22240247 or	BA15218N or
Q3321,Q3521	22240293	NJM4558L-D
	Capacitors	
C3121,C3122	374722244	0.22μF±5%,50V,Plastic
C315,C316	354741009	10μF,16V,Elect.
C317,C318	354784709	47μF,50V,Elect.
C3221,C3222	374722244	0.22μF±5%,50V,Plastic
C3321,C3322	374722244	0.22μF±5%,50V,Plastic
C3421,C3422	374722244	0.22μF±5%,50V,Plastic
C3521,C3522	374722244	0.22μF±5%,50V,Plastic
C3621	374721034	0.01μF±5%,50V,Plastic
C3622	374724734	0.047μF±5%,50V,Plastic
C3623	374721244	0.12μF±5%,50V,Plastic
C3624	374722234	0.022μF±5%,50V,Plastic
C3625	374722244	0.22μF±5%,50V,Plastic
	Terminals	
P301,P302	25045571 or	NPJ-6PDRW386 or
	25045300	NPJ-6PDBL159
	Sockets	
P303	25051529	NSCT-18P1316
P304	25051237	NSCT-12P1027
P305	25051234	NSCT-9P1024

REGULATOR PC BOARD (NAPS-6534-3A/3B/3C/3D)

CIRCUIT NO.	PART NO.	DESCRIPTION
Q3901	222780125	78M12HF, IC
Q3902	222790125	79M12HF, IC
Q3903	222780065	78M06HF, IC
C3904-C3906	354741009	10μF,16V,Elect.capacitor
JL3901B	25050270	NSCT-6P98,Socket
JL3902B	25050267	NSCT-3P95,Socket

NOTE: <D>: 120V model only
<P>: European model only
<T>: Asian model only
<W>: Worldwide model only
<A>: Australian model only

ADJUSTMENT PROCEDURES

Preparation

1. Input

FM mono: 1kHz,75kHz devi.,60dB/μV

FM stereo: 1kHz, 75kHz devi., 60dB/μV

Pilot signal 19kHz 7.5kHz devi.

AM: 400Hz, 30% mod.

2. Outputs

Connect the non-inductive type resistor of 8 ohms to the all speaker terminals unless otherwise noted.

FM

Item	Step	Connection of instrument	FM SG output	Stereo modulator output	Tuning frequency	Output indicator	Adjustment point	Adjust for	Remarks
FM IF/RF	1	Fig. 1	99.0MHz 1kHz 75kHz devi. 65dBf (60dB)	—	99.0MHz	DC voltmeter	L141	0±20mV	FM MUTE/MODE switch:ON/STEREO Repeat the steps 1 and 3 until no further adjustment is necessary.
	2					AC voltmeter	IFT on the front end	Maximum	
	3					Distortion analyzer	L142	Minimum	
Stereo Distortion		Fig. 2	99.0MHz Ext. mod. 65dBf (60dB)	Channel L or R 1kHz	99.0MHz	Distortion analyzer	IFT on the front end	Minimum	Don't turn more than ±180°.
Stereo Separation	1	Fig. 2	99.0MHz Ext. mod. 65dBf (60dB)	Channel L 1kHz	99.0MHz	Channel R AC voltmeter	R167	Minimum	Maximum and same separation
	2			Channel R 1kHz		Channel L AC voltmeter		Minimum	
Muting Level		Fig. 3	99.0MHz 19.2dBf (14dB)	—	99.0MHz	Oscilloscope or TUNED indicator	R141	Signal output or light on	

AM

120V model

Step	AM SG output	Tuning Frequency	Output Indicator	Adjustment point	Adjust for
1		530kHz	Digital DC voltmeter	OSC coil on RF block L171	1.4±0.2V
2	600kHz 400Hz 30% mod. 60dB/m	600kHz	AC voltmeter	RF coil on RF block L171	Maximum
3	999kHz 400Hz 30% mod. 60dB/m	990kHz	AC voltmeter	L172	Maximum

Reference Specification

FM tuned voltage: 87.5MHz~108.0MHz
More than 1.3V~Less than 9.0V

AM tuned voltage: 530kHz~1710kHz
1.4±0.5V~Less than 9.0V

230V and worldwide models

Step	AM SG output	Tuning Frequency	Output Indicator	Adjustment point	Adjust for
1		522kHz or 531kHz	Digital DC voltmeter	OSC coil on RF block L171	1.4±0.2V
2	603kHz 400Hz 30% mod. 60dB/m	603kHz	AC voltmeter	RF coil on RF block L171	Maximum
3	999kHz 400Hz 30% mod. 60dB/m	999kHz	AC voltmeter	L172	Maximum

Reference Specification

FM tuned voltage: 87.5MHz~108.0MHz
more than 1.3V ~Less than 9V

AM tuned voltage: 522kHz~1611kHz
1.4±0.2V~Less than 9.0V
(230V model)

AM tuned voltage: 531kHz~1602kHz
1.4±0.2V~Less than 9.0V
(Worldwide model)

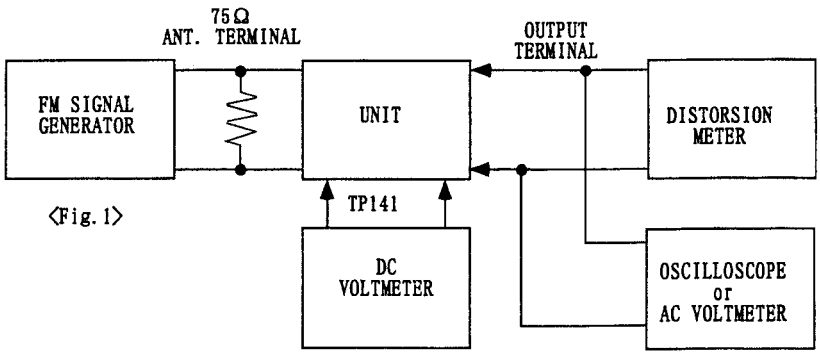

〈Fig. 1〉

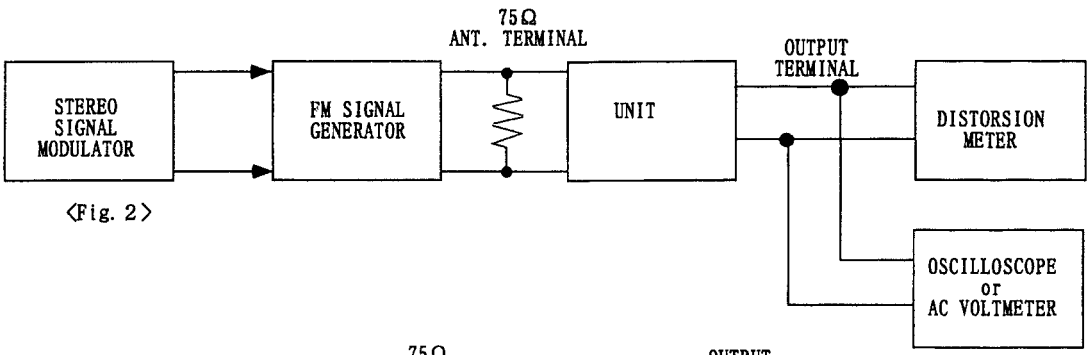

〈Fig. 2〉

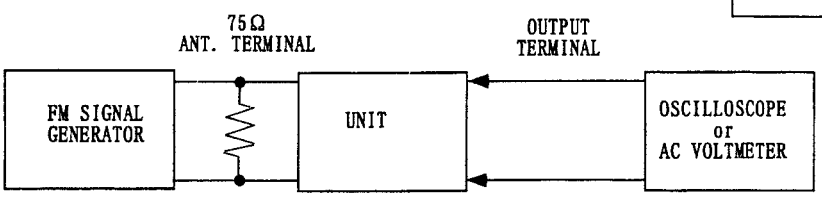

〈Fig. 3〉

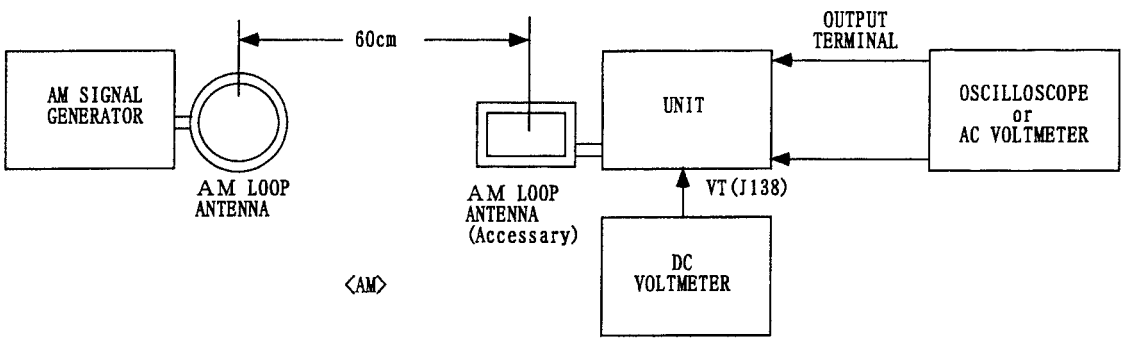

〈AM〉

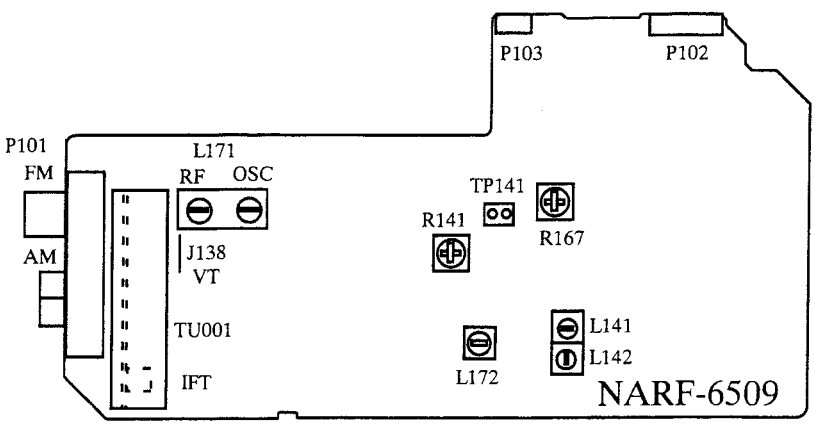

Idling current adjustment

Before Idling adjustment, turn the trimming resistors R573, R574, R673, R674 and R1532 to counter clockwise.
Connect the DC voltmeter to sockets P511,P512, P611, P612 and P1511.
After turn POWER to ON, adjust the trimming resistors R573, R574, R673, R674 and R1532 so that the reading of voltmeter becomes 2.5±0.2mV.
After adjustment, attach the top cover.
Confirm the voltage of above points after five minutes.
Readjust the above resistors so that the voltage becomes 6.5±0.2mV.
Note: No load and No signal

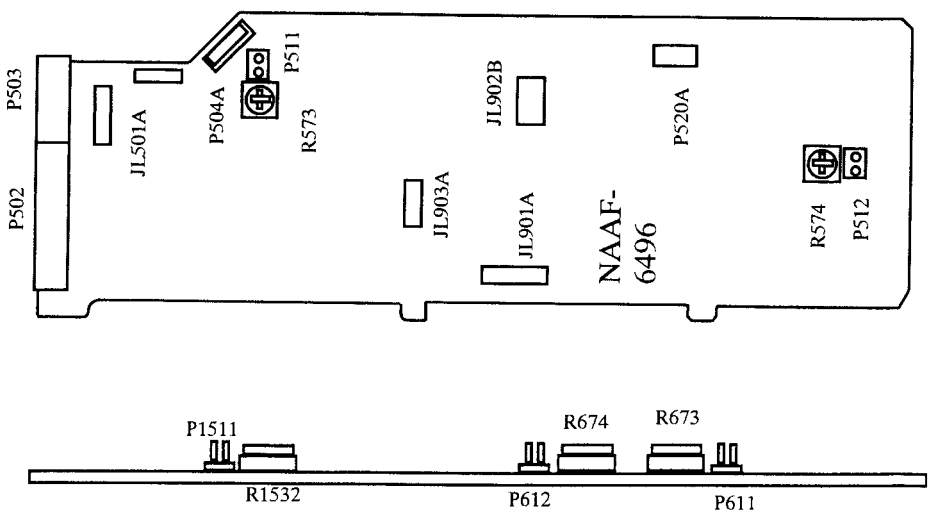

NAAF-6495

Confirmation of protection circuit

1. Confirmation of operation of speaker relay
   Confirm that the speaker relay turns ON approximate. 5 seconds after the power switch is turned ON.
   Confirm that the speaker relay turns OFF immediately after the power switch is turned OFF.

2. Confirmation of DC detection circuit
   Press and hold down CD button, then press SPEAKERS-MAIN and SPEAKERS-REMOTE buttons at the same time.
   During "TEST-" on the FL tube is displayed, press DVD button. Next, press CD button.
   Apply DC 1.5~3V to MULTI CHANNEL INPUT terminals with no load.
   Confirm that the speaker relay turns OFF.
   Apply DC -1.5~-3V to MULTI CHANNEL INPUT terminals with no load.
   Confirm that the spekaer relay turns OFF.

3. Confirmation of Current detection circuit
   Press and hold down CD button, then press SPEAKERS-MAIN and SPEAKERS-REMOTE buttons at the same time.
   During "TEST-" on the FL tube is displayed, press DVD button.
   Coneect Differentiator below and apply the 50Hz square signal to the terminal of MULTI CHANNEL INPUT.
   Adjust the attenuator or Volume so that the output level becomes 30V p-p.
   Confirm that the speaker relay turns OFF when a 1.5 ohm load is connected.

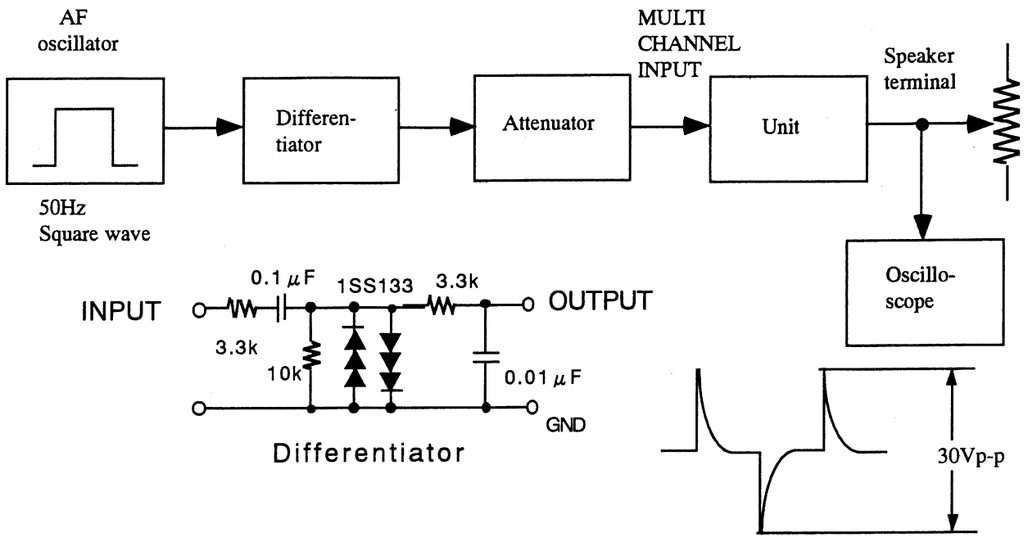

IC BLOCK DIAGRAM

CS4226 (Codec)

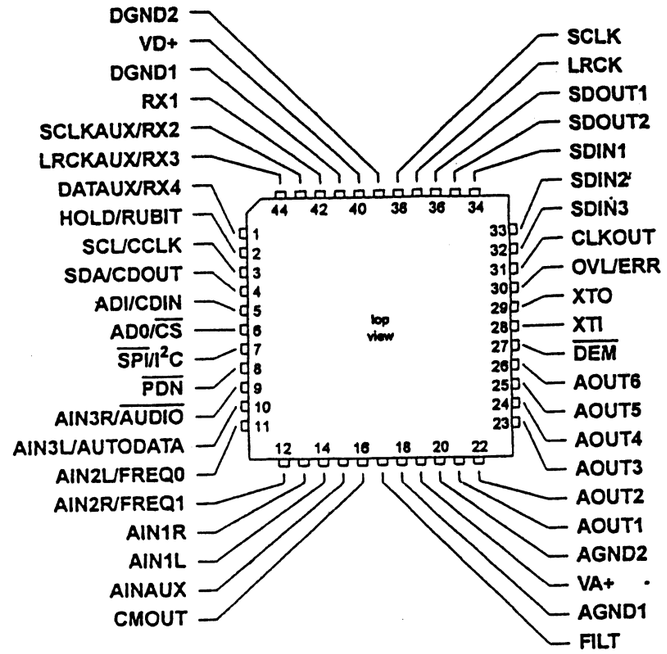

IC BLOCK DIAGRAM

LC32464M-80 (RAM)

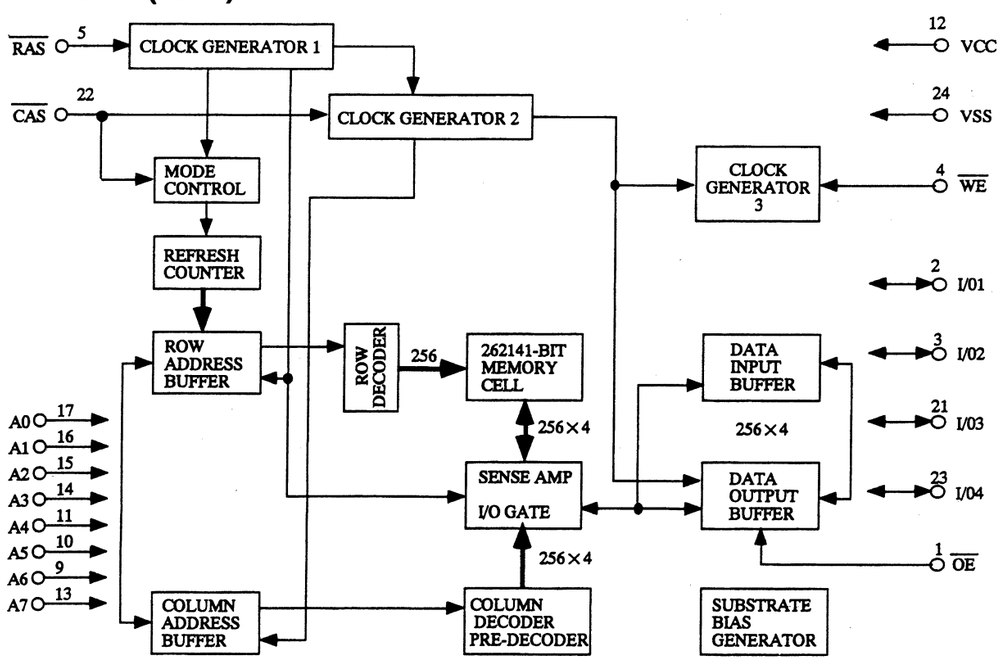

Pin No.	Symbol	I/O	Description
1	DATAAUX/RX4	I	Auxiliary data input / receiver channel 4
2	HOLD/RUBIT	I/O	S/PDIF receiver user bit / HOLD control
3	SCL/CCLK	I/O	Serial control interface clock
4	SDA/CDOUT	O	Serial control data out
5	ADI/CDIN	I	Address bit / serial control data in
6	AD0/CS	O	Address bit / control post chip select
7	SPI/I²C	I/O	Control post format
8	PDN		Power down pin
9	AIN3R/AUDIO	I	Right channel multiplexer input 3/AC3 and MPEG detect output
10	AIN3R/AUTODATA	I	Righrt channel multiplexer input 3/AC3 and MPEG detect output
11	AIN2L/FREQ0	I	Left channel multiplexer input 2/channel status freq.bit
12	AIN2R/FREQ1	I	Right channel multiplexer input 2/channel status freq.bit
13	AIN1R	I	Right channel multiplexer input 1
14	AIN1L	I	Left channel multiplexer input 1
15	AINAUX	I	Auxiliary line level input(non A/D converter)
16	CMOUT	O	Common mode output
17	FILT		PLL loop filter pin
18	AGND1	-	Analog ground
19	VA+	-	Analog power input
20	AGND2		Analog ground
21	AOUT1	O	The analog outputs from the 6 D/A converters.
22	AOUT2	O	The analog outputs from the 6 D/A converters.

Pin No.	Symbol	I/O	Description
23	AOUT3	O	The analog outputs from the 6 D/A converters.
24	AOUT4	O	The analog outputs from the 6 D/A converters.
25	AOUT5	O	The analog outputs from the 6 D/A converters.
26	AOUT6	O	The analog outputs from the 6 D/A converters.
27	DEM	O	De-emphasis control
28	XTI	-	Crystal connections
29	XTO	-	Crystal connections
30	OVL/ERR	O	Overload indicator
31	CLKOUT	O	Master clock output
32	SDIN3	I	Serial data input 3
33	SDIN2	I	Serial data input 2
34	SDIN1	I	Serial data input 1
35	SDOUT2	O	Serial data output 2
36	SDOUT1	O	Serial data output 1
37	LRCK	I/O	Left/Right select signal I/O
38	SCLK	I/O	DSP serial port clock I/O
39	DGND2	-	Digital ground
40	VD+	-	Digital power input(+5V)
41	DGND1	-	Digital ground
42	RX1		Receiver channel 1
43	SCLKAUX/RX2	I/O	Auxiliary bit clock input or output / receiver channel 2
44	LRCKAUX/RX3	I/O	Auxiliary word clock input or output / receiver channel 3

 TX-DS474 / TX-SE550

12-BT-111GK (FL tube)

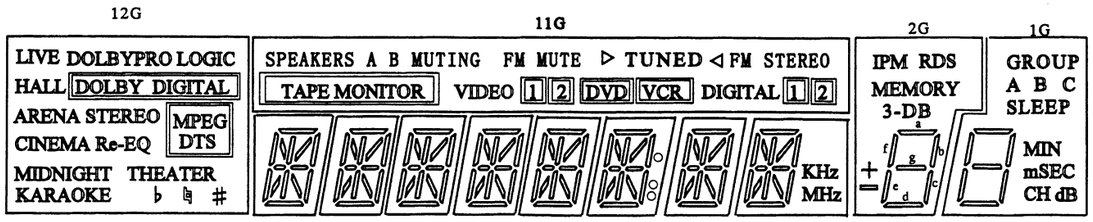

ANODE CONNECTION

	12G	11G	10G～6G	5G	4G	3G	2G	1G
P1	LIVE	SPEAKERS VIDEO	a	a	a	a	a	a
P2	DOLBYPRO LOGIC	A	h	h	h	h	IPM	GROUP
P3	HALL	B	j	j	j	j	RDS	SLEEP
P4	DOLBY DIGITAL	TAPE MONITOR	k	k	k	k	MEMORY	MIN
P5	(DOLBY DIGITAL)	MUTING	b	b	b	b	b	b
P6	ARENA	FM MUTE	f	f	f	f	f	f
P7	STEREO	1 (VIDEO)	m	m	m	m	3-DB	mSEC
P8	CINEMA Re-EQ	2 (VIDEO)	g	g	g	g	g	g
P9	MPEG	DVD	c	c	c	c	c	c
P10	DTS	VCR	e	e	e	e	e	e
P11	(MPEG DTS)	TUNED	r	r	r	r	+	A
P12	MIDNIGHT THEATER	▷ ◁	p	p	p	p	—	B
P13	KARAOKE	FM STEREO	n	n	n	n	—	C
P14	♭	DIGITAL	d	d	d	d	d	d
P15	♮	1 (DIGITAL)	—	col	—	kHz	—	CH
P16	#	2 (DIGITAL)	—	Dp	—	MHz	—	dB

TC9409 (Karaoke Decoder)

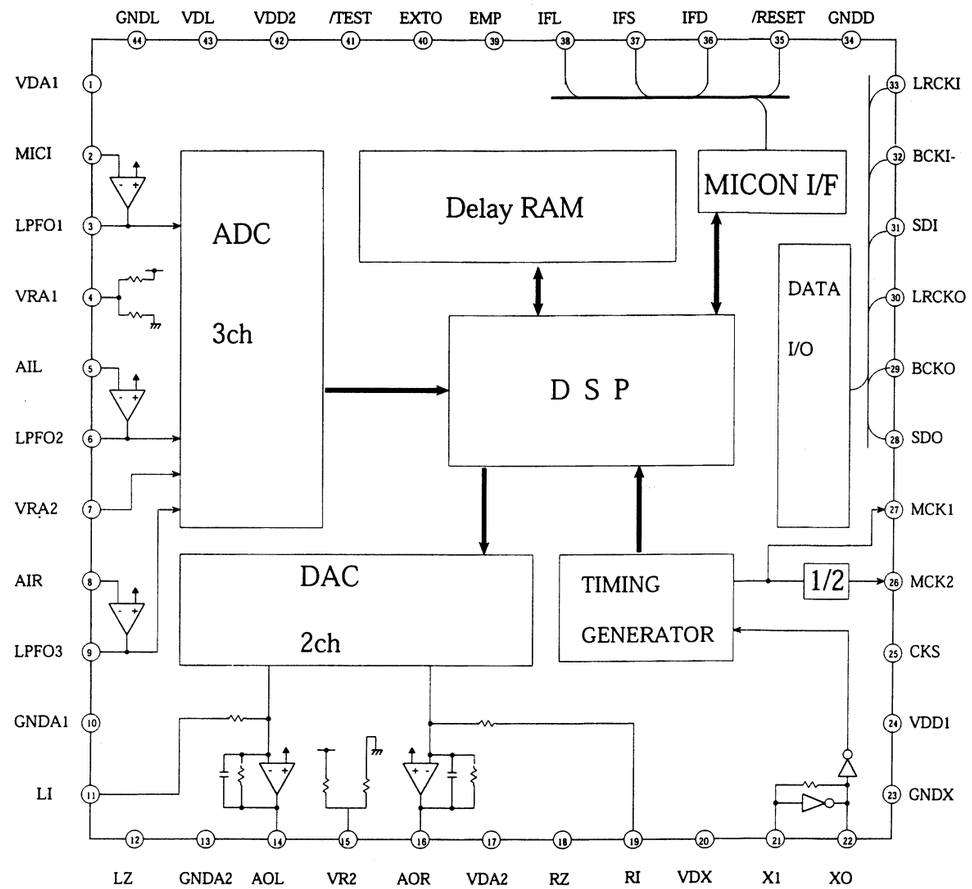

BU1923 (RDS Decoder)

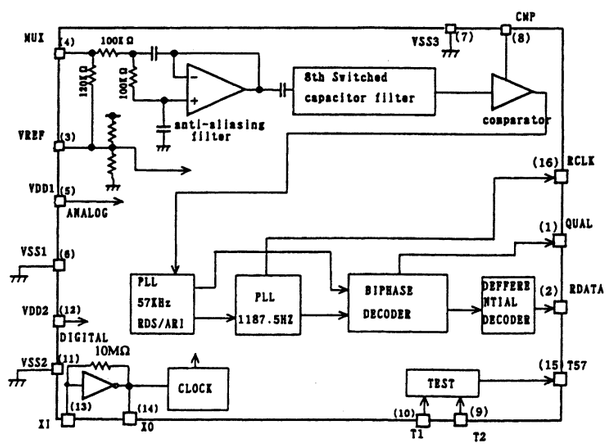

WIRING VIEW
MODEL TX-DS474

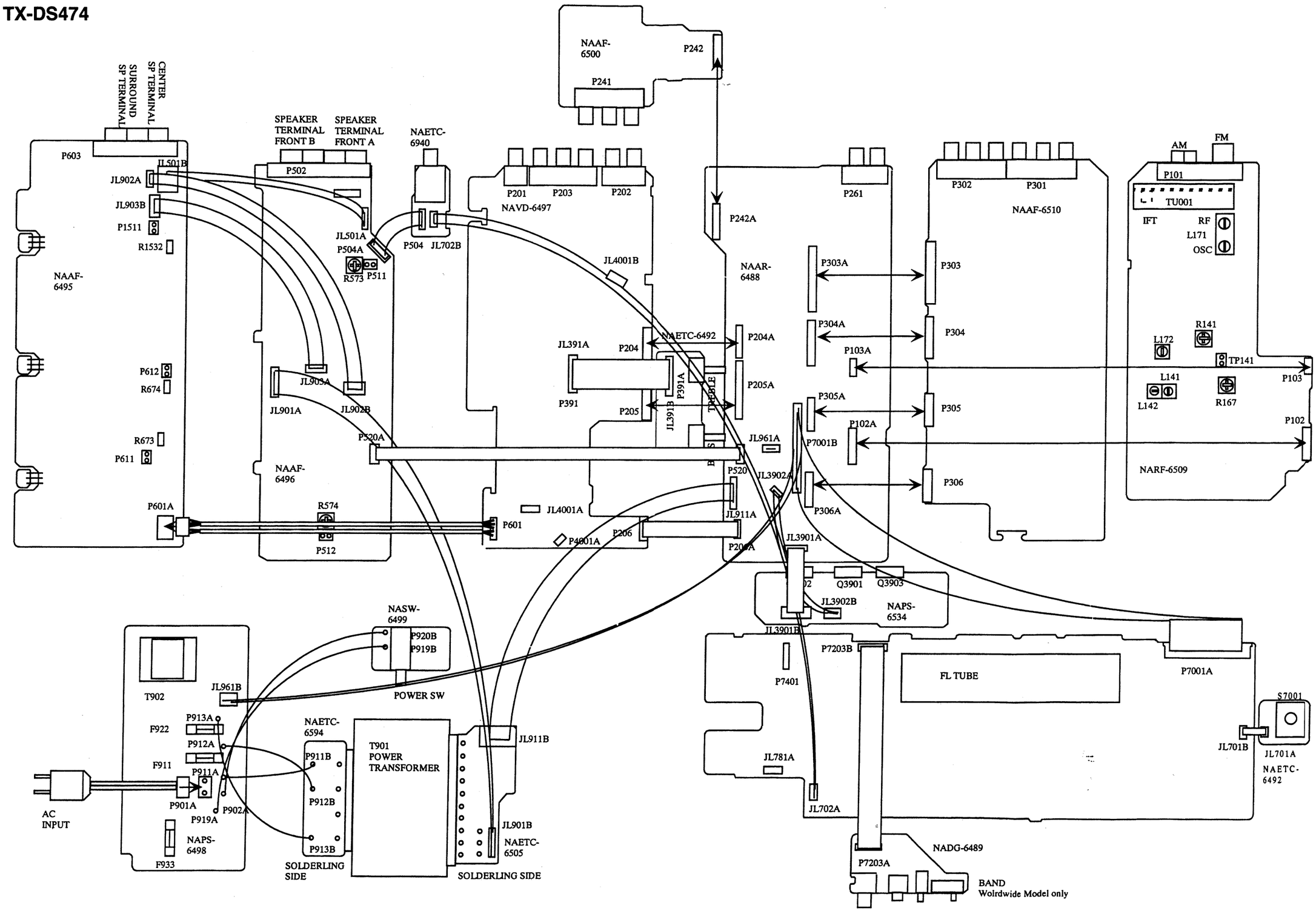

WIRING VIEW
MODEL TX-SE550

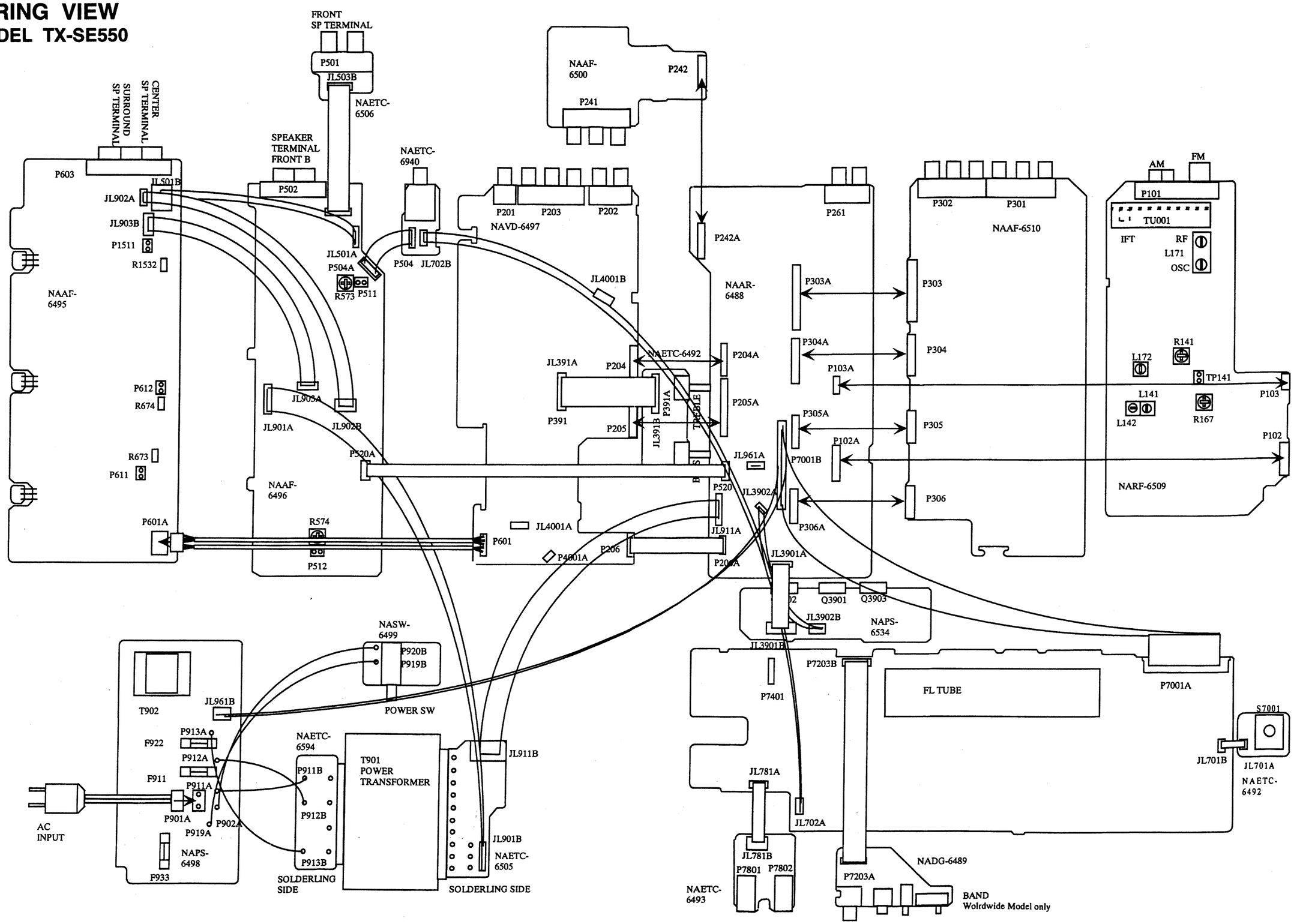

BLOCK DIAGRAM

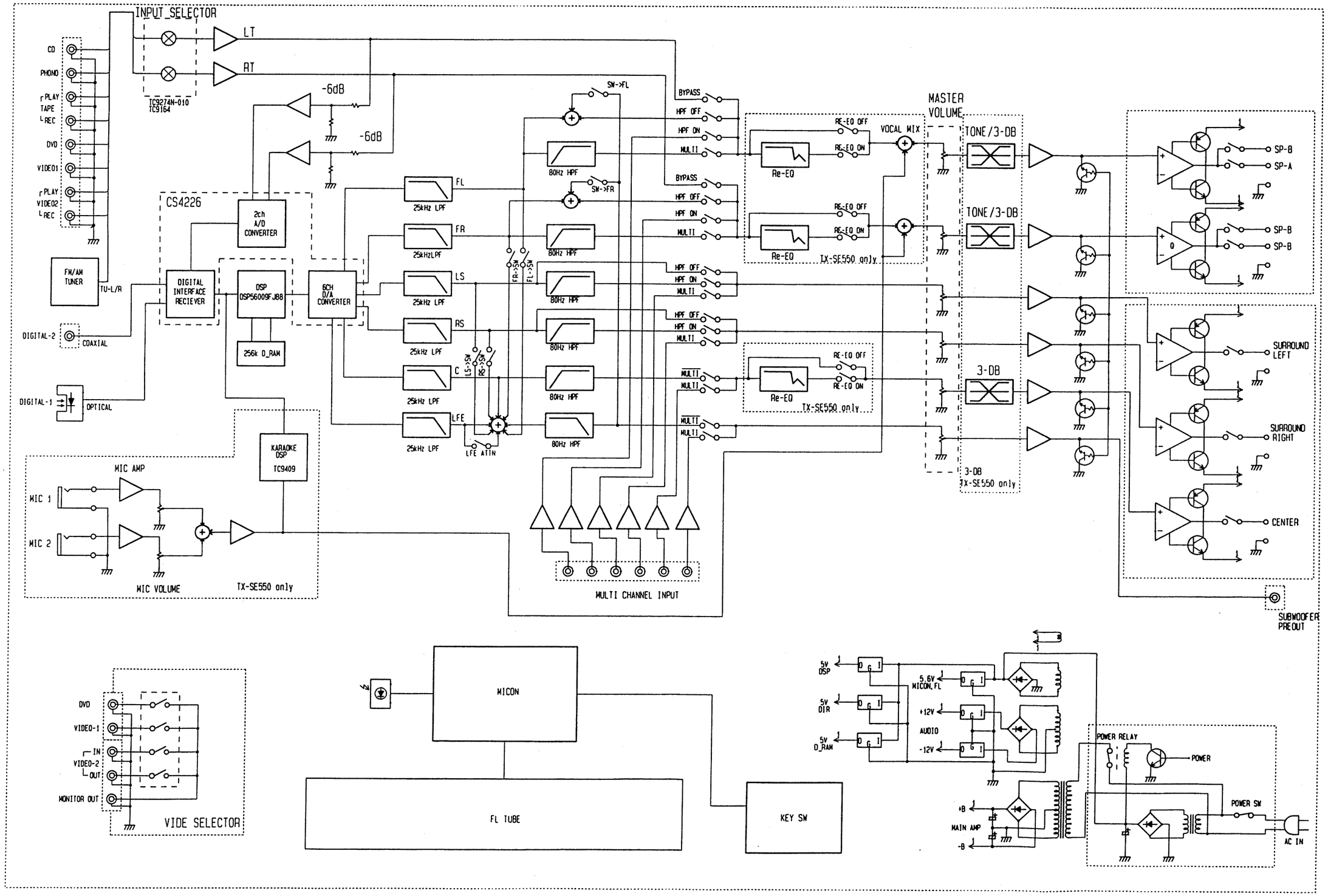

 TX-DS474 / TX-SE550

PRINTED CIRCUIT BOARD VIEW FROM SOLDERING SIDE

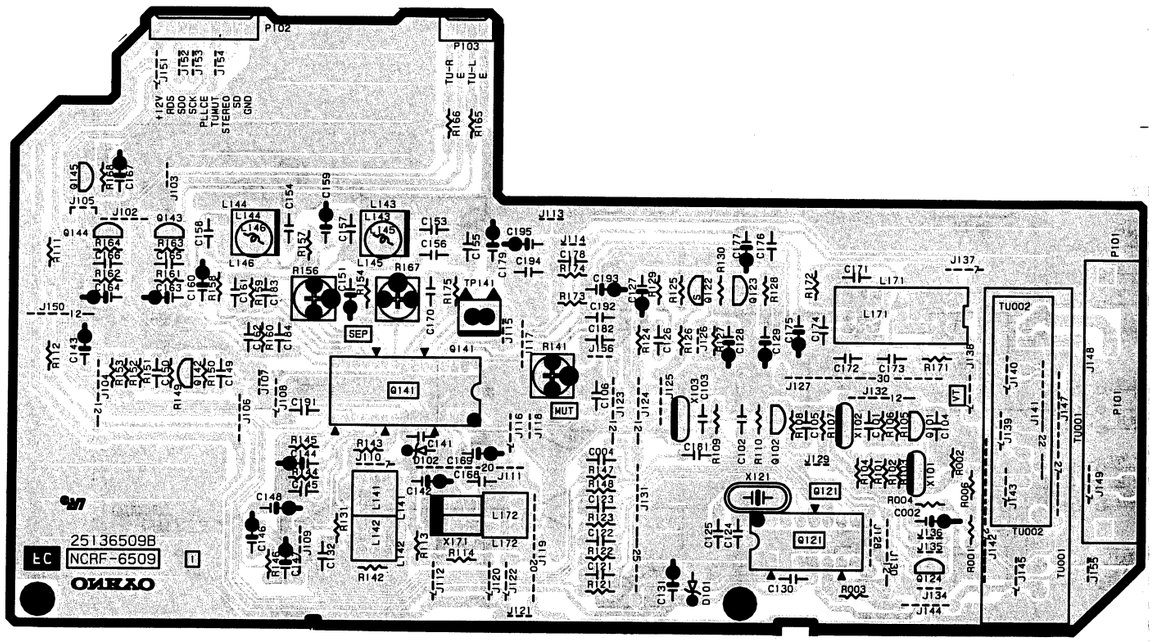

LA1837 (FM IF, MPX and AM Radio System)

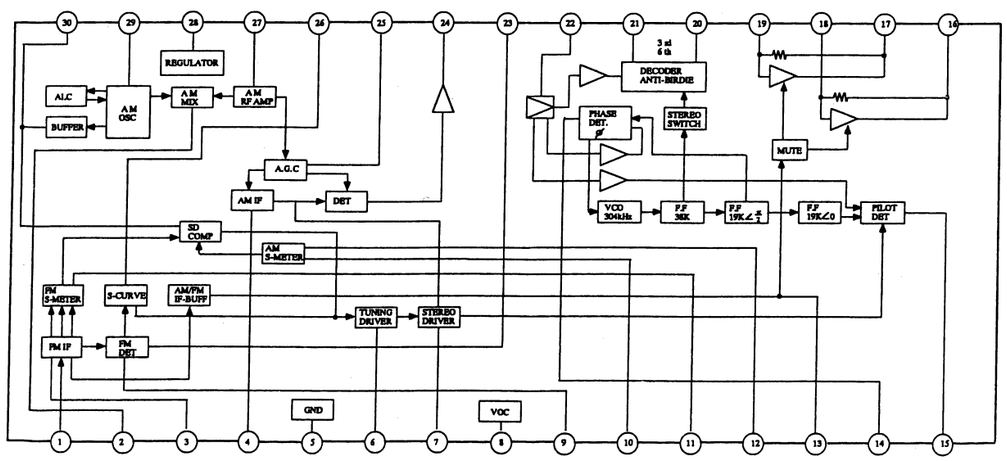

LM7001/LM7001J (PLL Synthesizer and Controller)

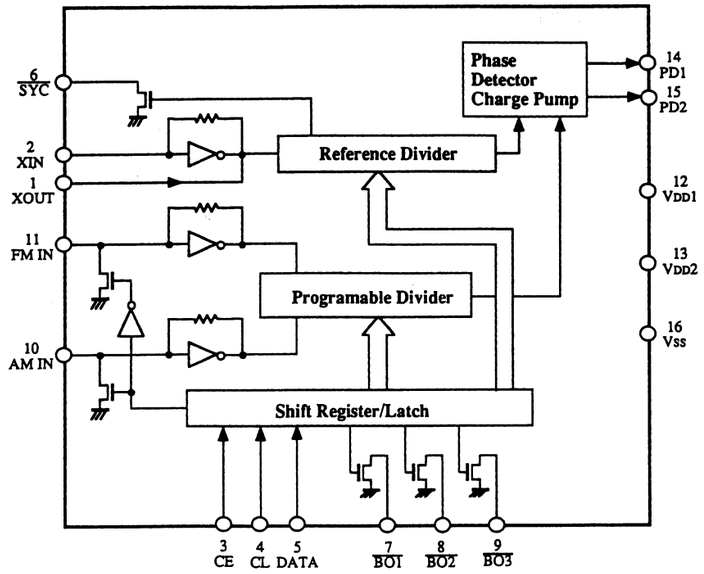

Pin No.	Terminal	Description
1	XOUT	Connect the 7.2MHz crystal resonator.
2	XIN	
3	CE	Chip enable terminal. Connect to the terminal CE of microprocessor.
4	CL	Serial clock input terminal. Connect to the terminal CLK of microprocessor.
5	DATA	Serial data input terminal. Connect to the terminal DATA of microprocessor.
6	$\overline{\text{SYN}}$	Not used.
7	$\overline{\text{AUTO/MONO}}$	Auto/Mono control terminal.
8	FM	Band selector output terminal. Low level at FM.
9	AM	Band selector output terminal. Low level at AM.
10	AMIN	AM local oscillator input terminal.
11	FMIN	FM local oscillator input terminal.
12	VDD1	Power source terminal for back-up.
13	VDD2	Power source terminal.
14	PD1	Phase comparator output terminal
15	PD2	Phase comparator output terminal
16	Vss	Ground terminal

SCHEMATIC DIAGRAM

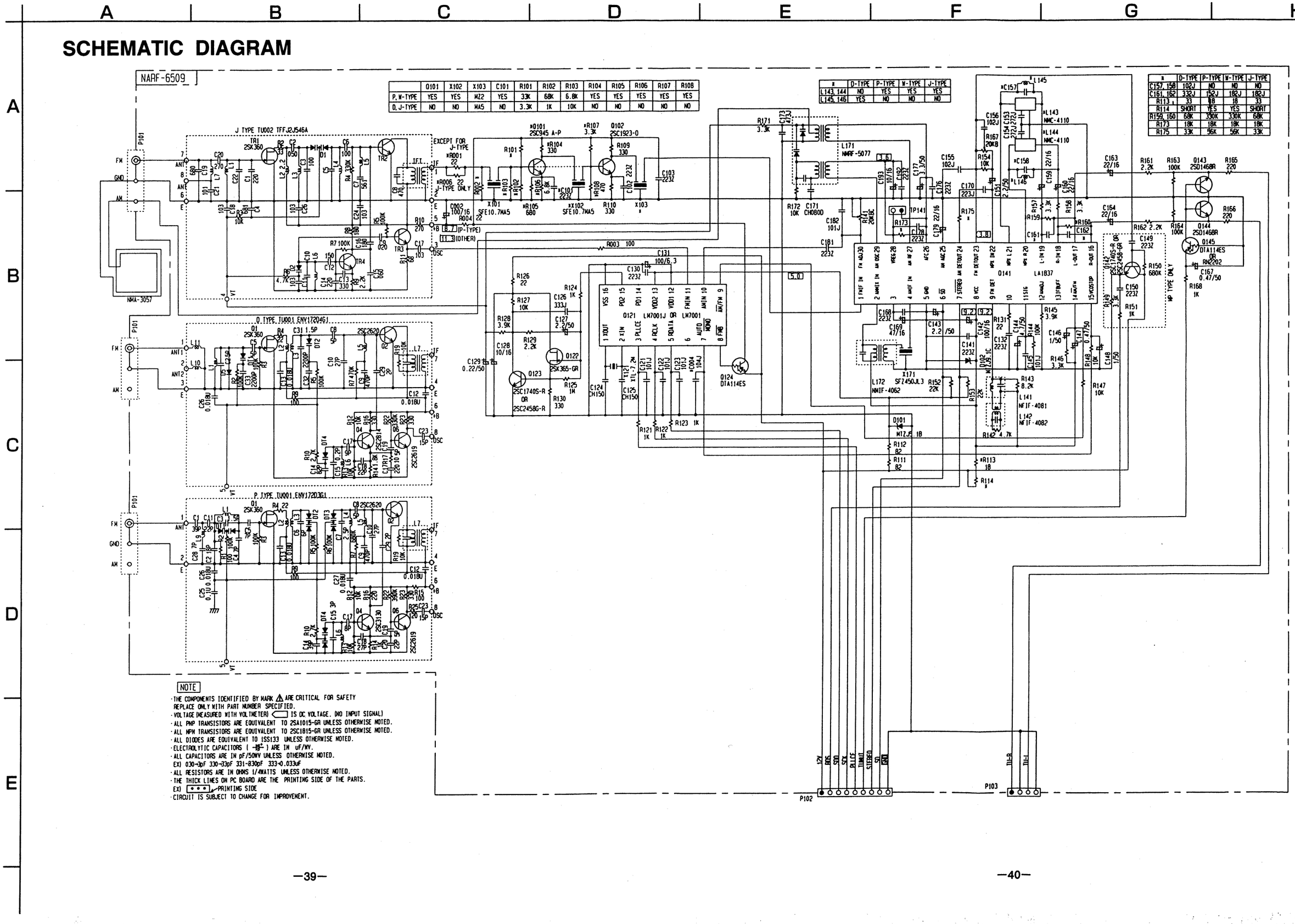

PRINTED CIRCUIT BOARD VIEW

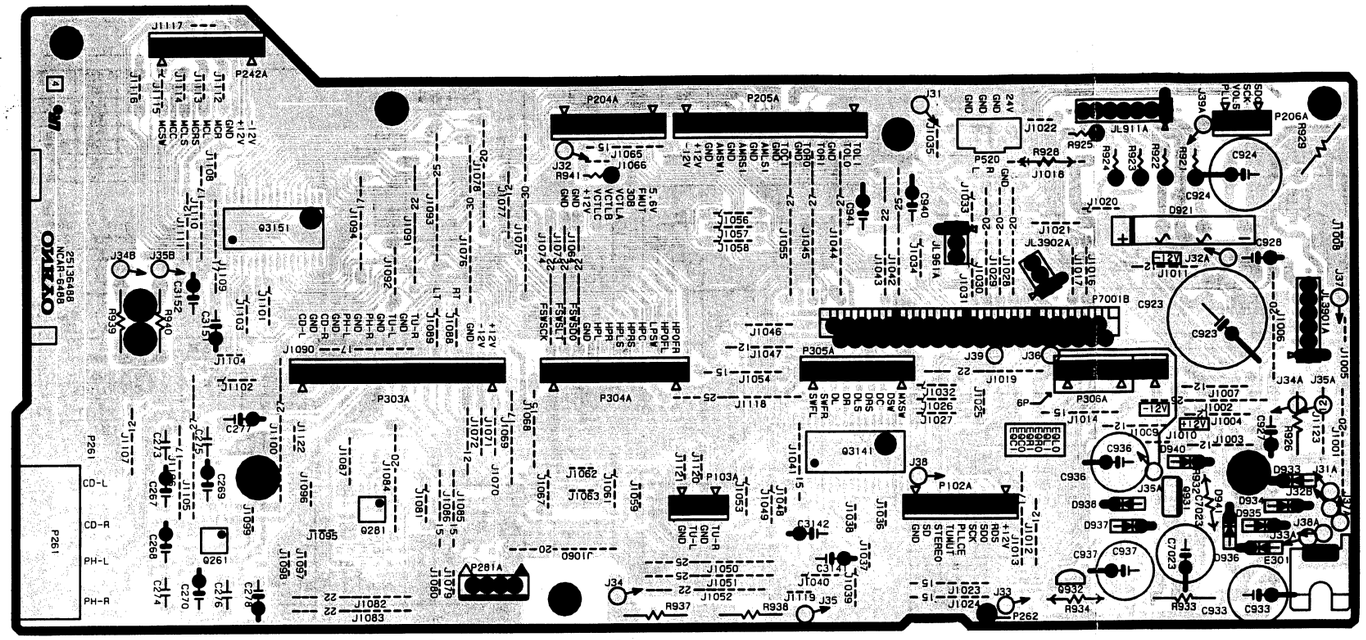

Component side
Surround switch PC board

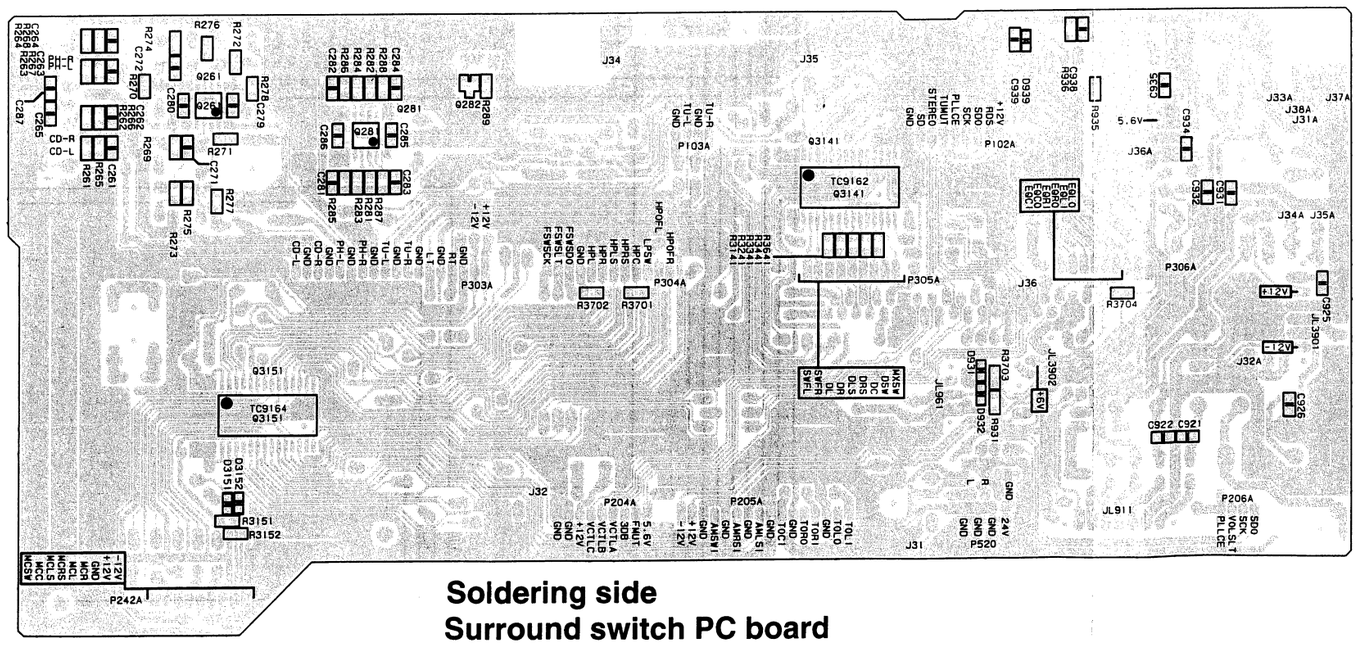

Soldering side
Surround switch PC board

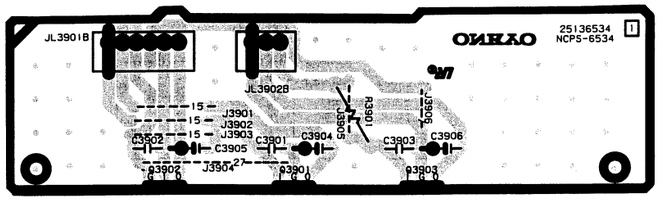

Regulator PC board

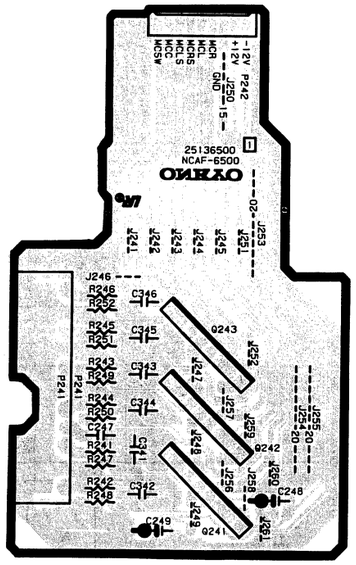

Multi-channel terminal PC board

SCHEMATIC DIAGRAM

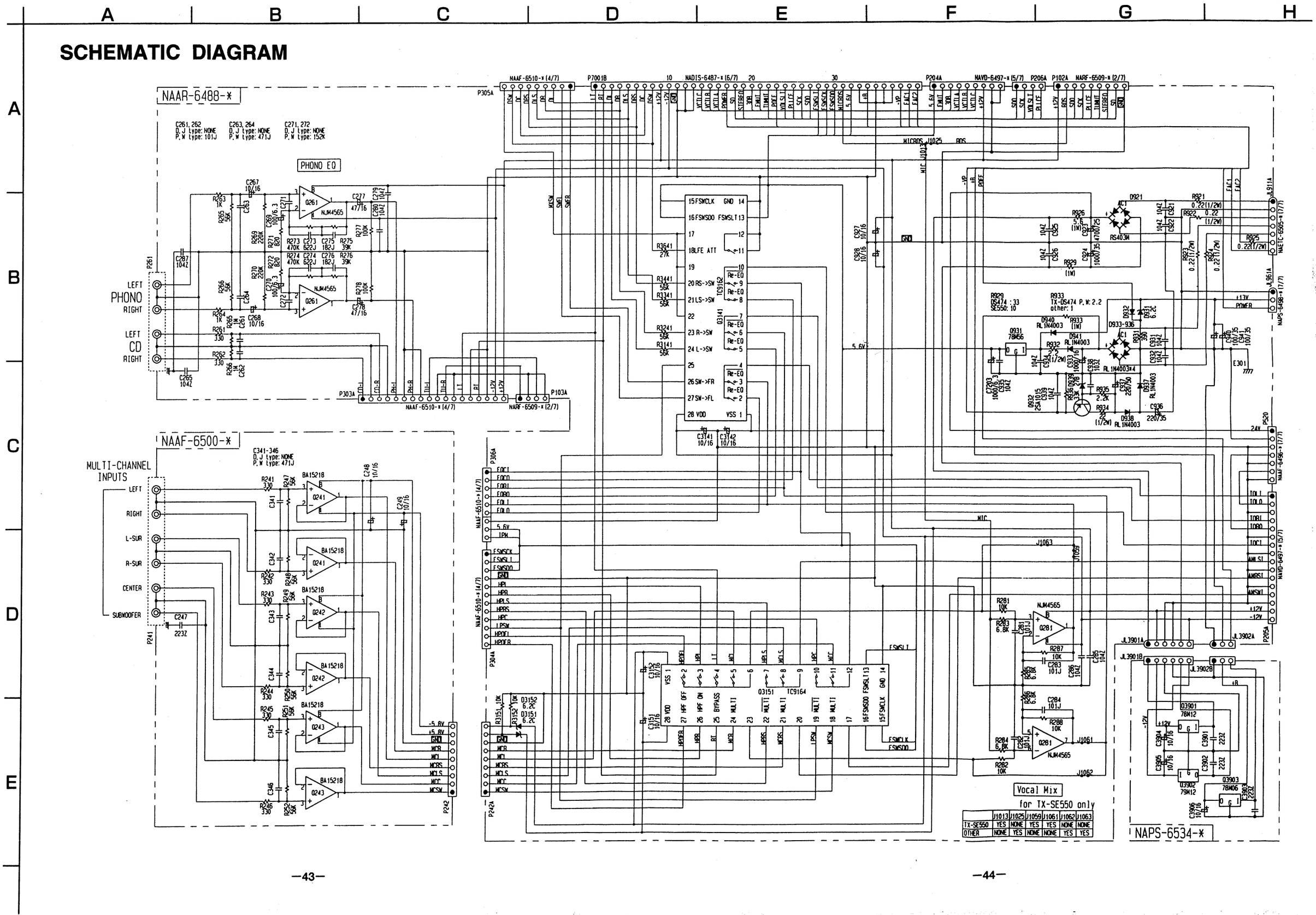

	J1013	J1025	J1059	J1061	J1062	J1063
TX-SE550	YES	NONE	YES	YES	NONE	NONE
OTHER	NONE	YES	NONE	NONE	YES	YES

 TX-DS474 / TX-SE550

PRINTED CIRCUIT BOARD VIEW FROM SOLDERING SIDE

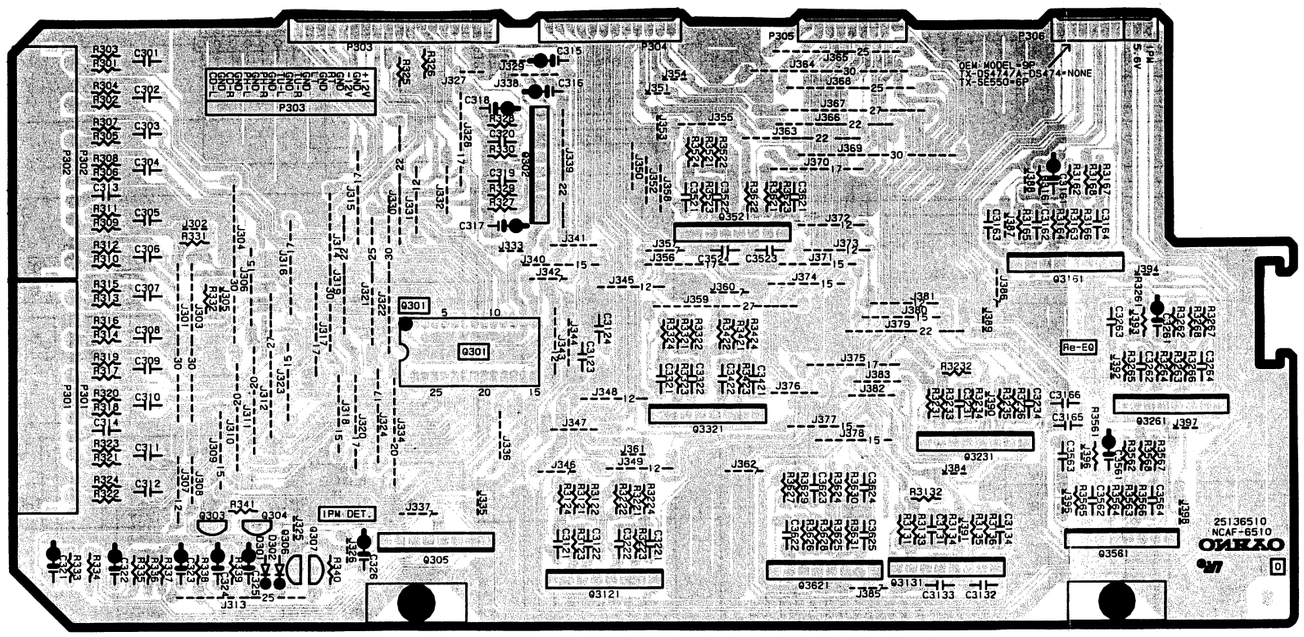

Selector circuit PC board

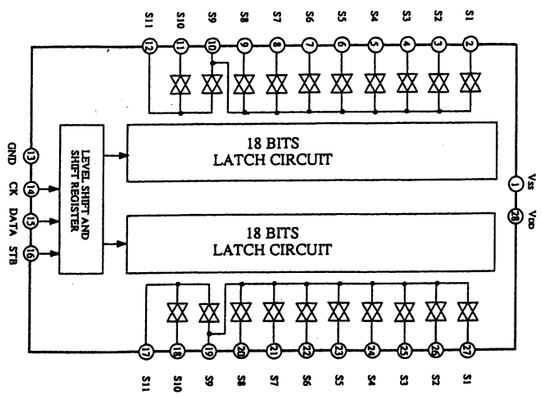

TC9273N-010 (Analog Switch)

SCHEMATIC DIAGRAM

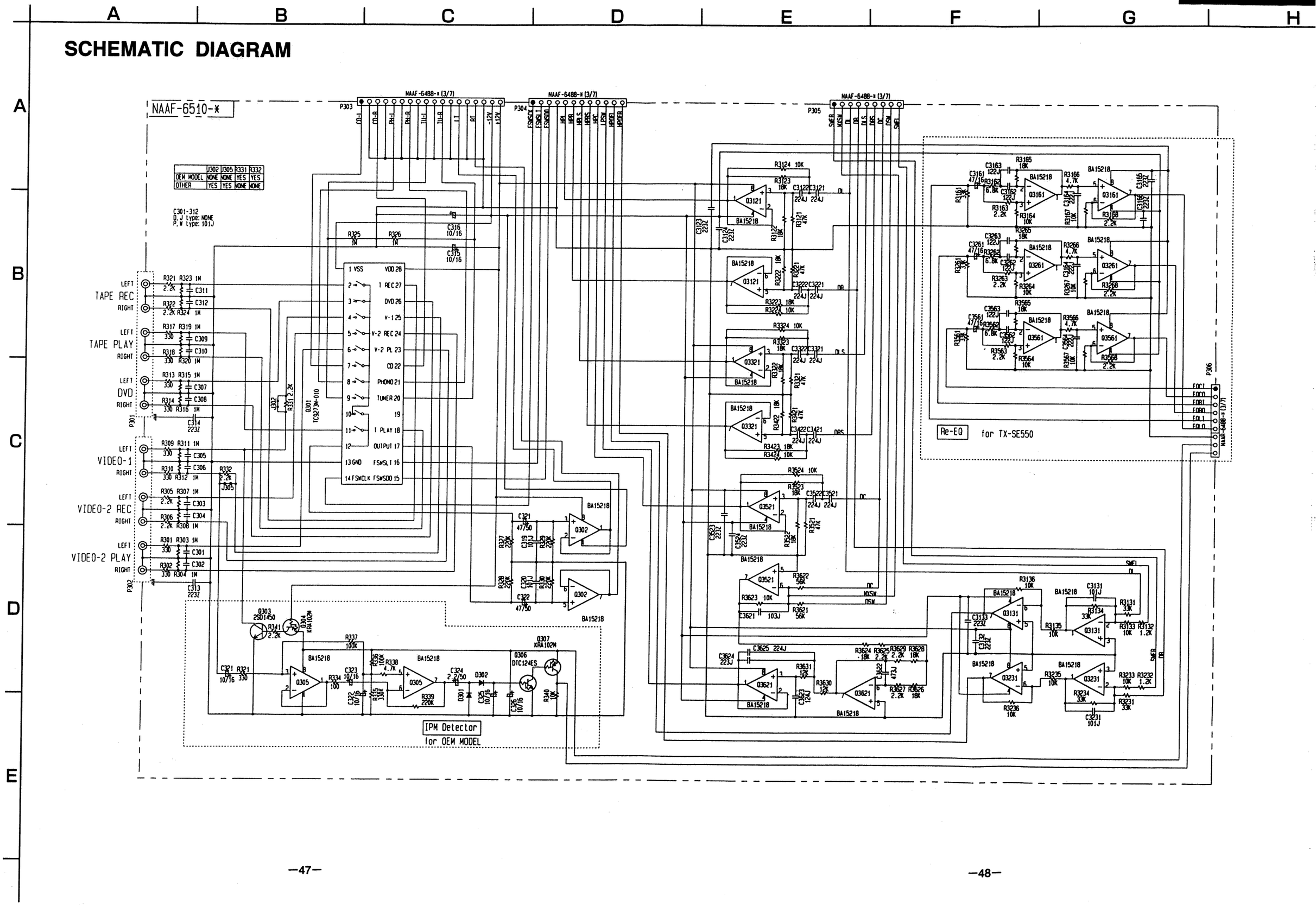

PRINTED CIRCUIT BOARD VIEW FROM SOLDERING SIDE

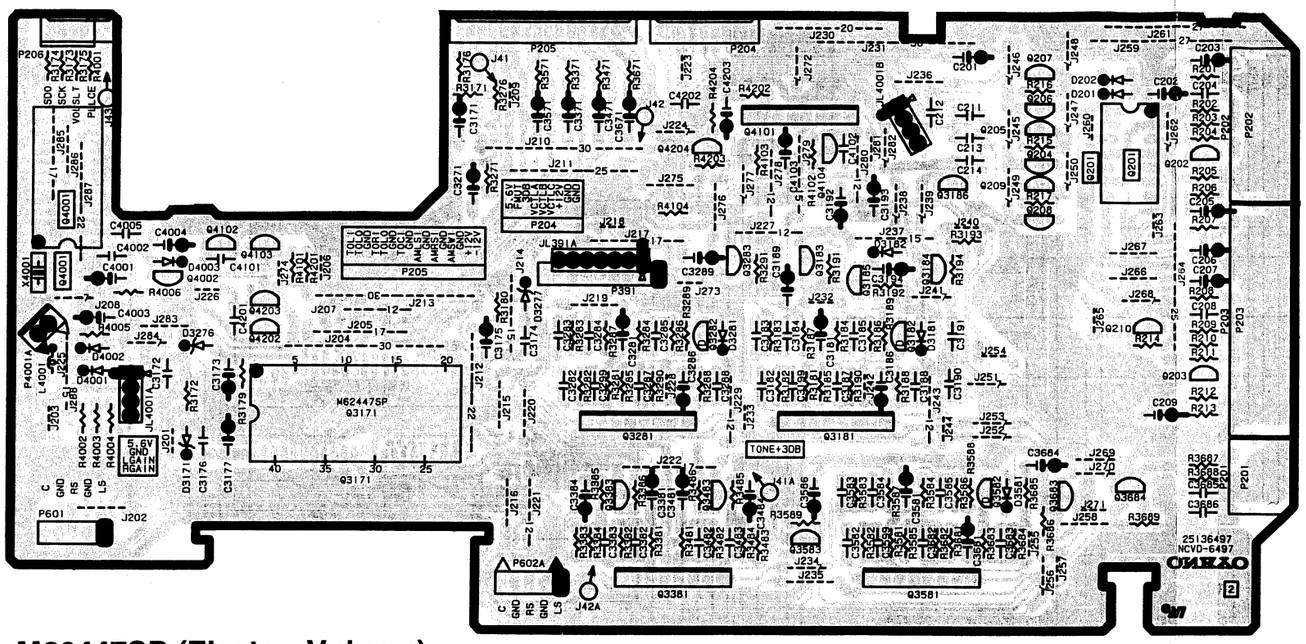

Volume circuit PC board

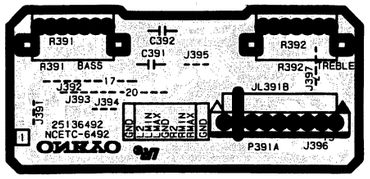

Tone control circuit PC board

M62447SP (Electro Volume)

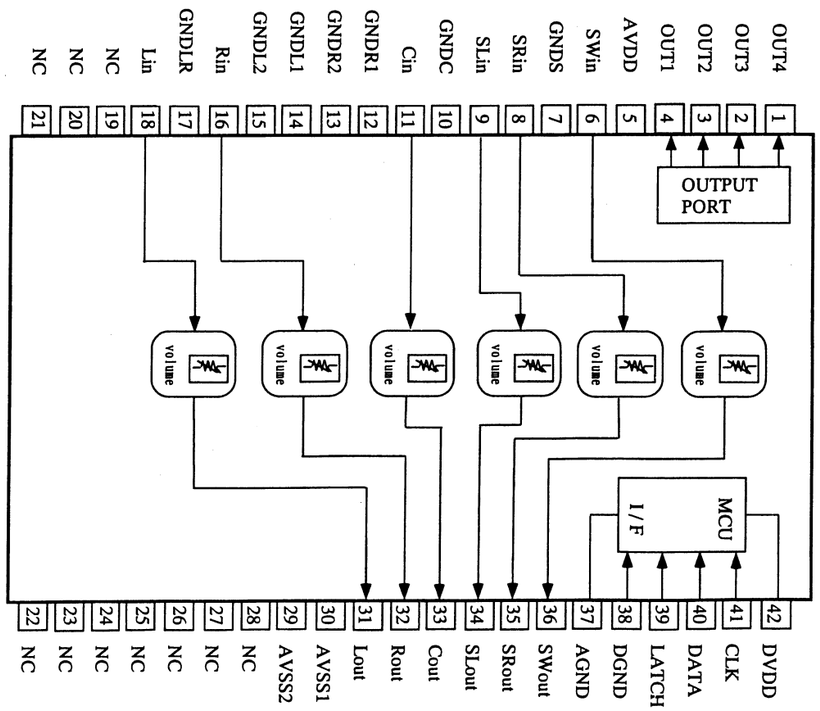

4066B (Analog Switch)

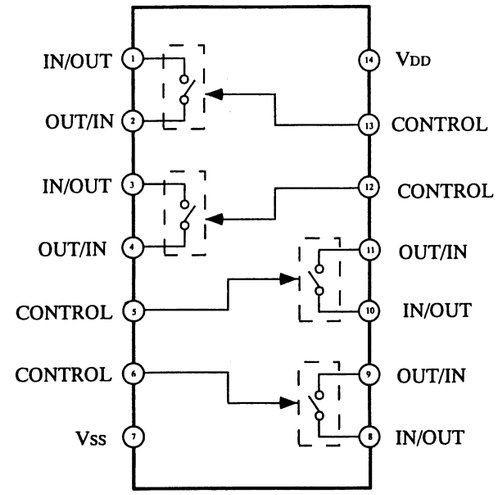

H:ON

L:OFF

Pin No.	Symbol	Description
1	OUT4	Port outputs
2	OUT3	
3	OUT2	
4	OUT1	
5	AVDD	Positive power supply (+7V)
7	GNDS	Ground
10	GNDC	
12	GNDR1	
13	GNDR2	
14	GNDL1	
15	GNDL2	
17	GNDLR	
6	SWIN	Volume inputs
8	SRIN	
9	SLIN	
11	CIN	
36	SWOUT	Volume outputs
35	SROUT	
34	SLOUT	
33	COUT	
16	RIN	Volume inputs
18	LIN	

Pin No.	Symbol	Description
32	ROUT	Volume outputs
31	LOUT	
19	NC	No connection
20		
21		
22		
23		
24		
25		
26		
27		
28		
29	AVSS1	Negative power supply (−7V)
30	AVSS2	
37	AGND	Analog ground
38	DGND	Digital ground
39	LATCH	Latch input
40	DATA	Data input
41	CLK	Clock input
42	DVDD	Digital power supply (+5V)

SCHEMATIC DIAGRAM

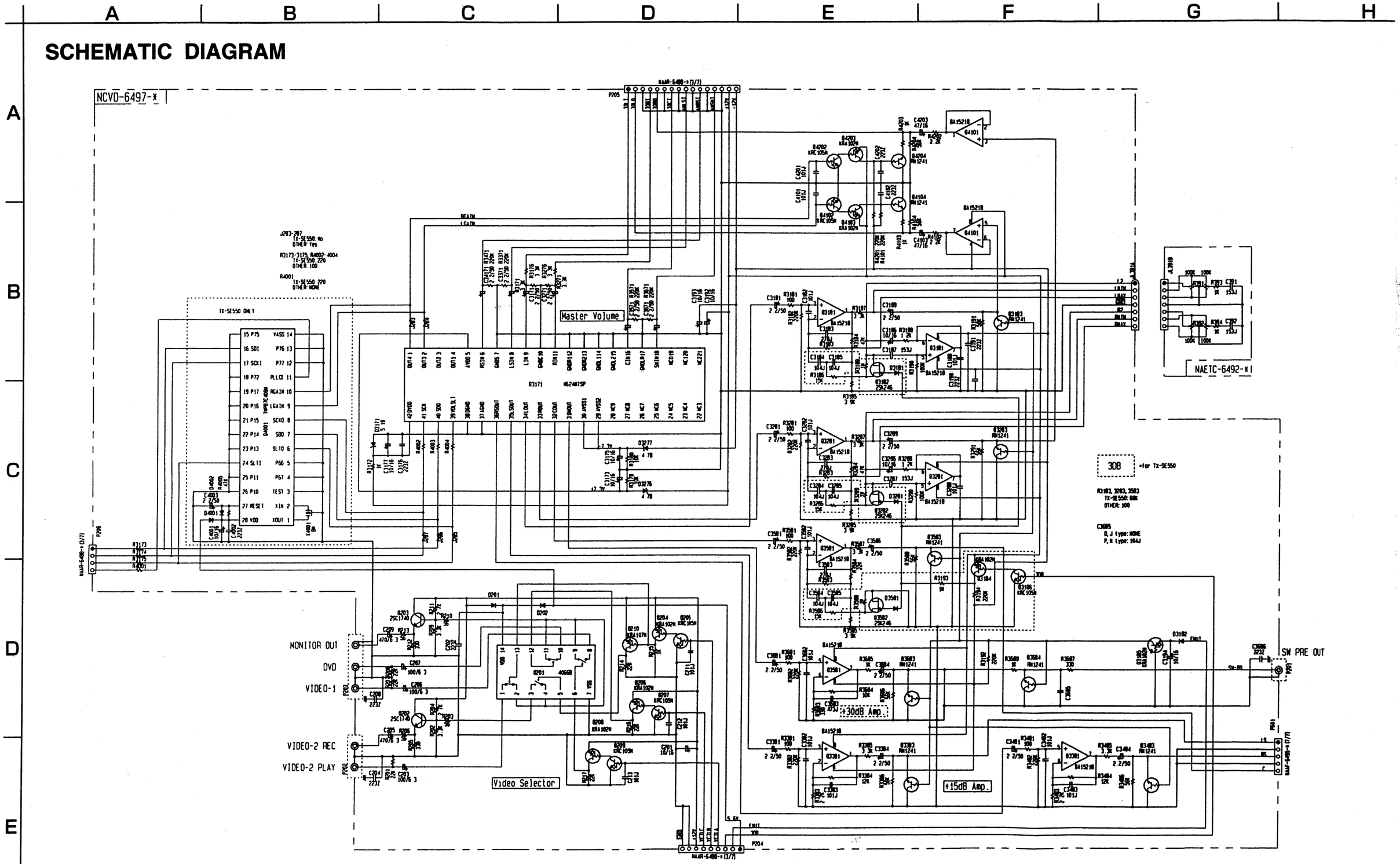

 TX-DS474 / TX-SE550

PRINTED CIRCUIT BOARD VIEW

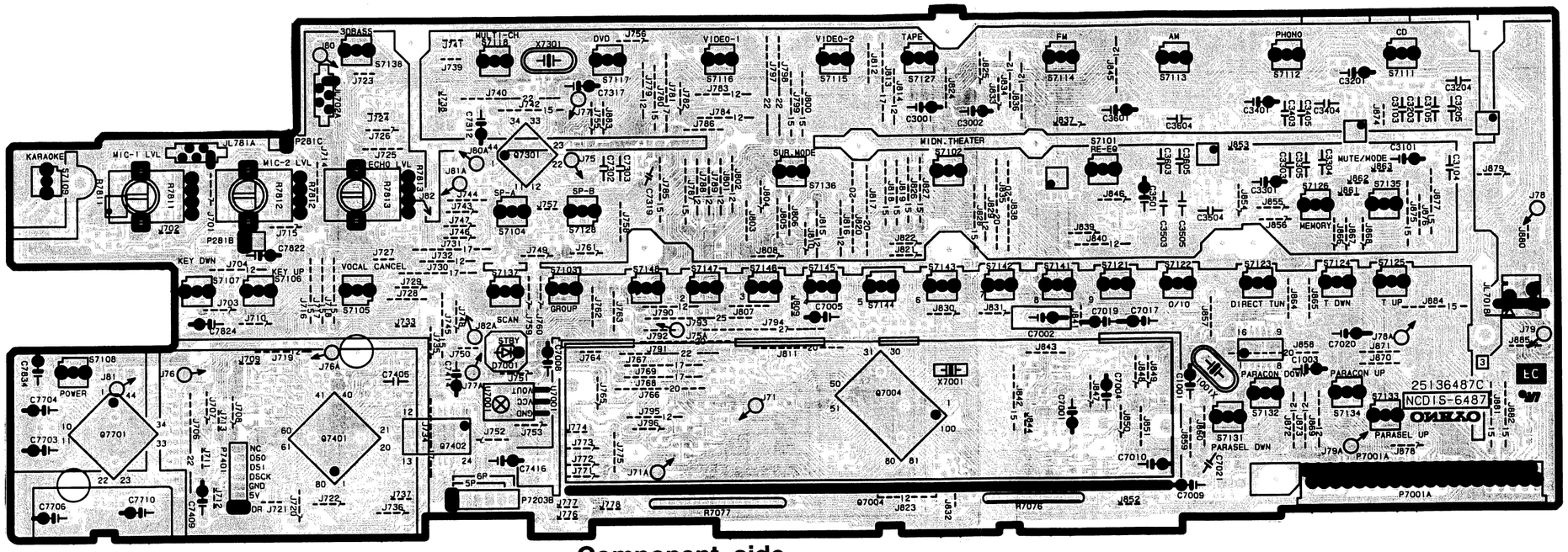

Component side
Display circuit PC board

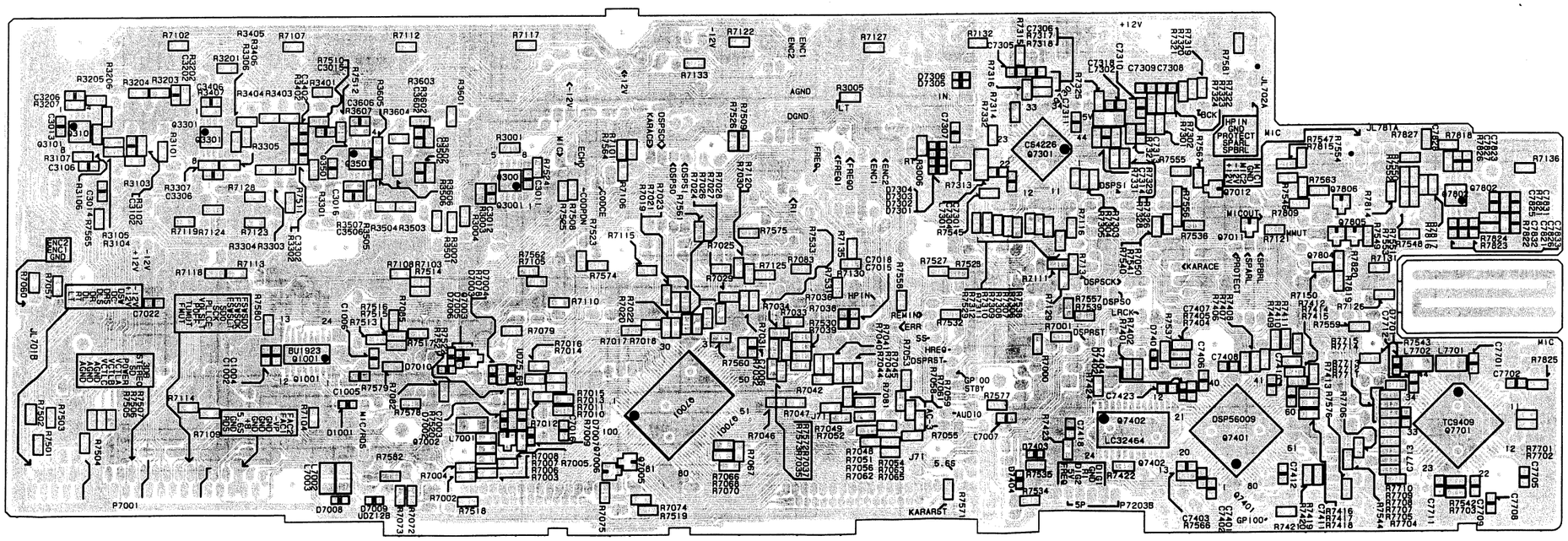

Soldering side

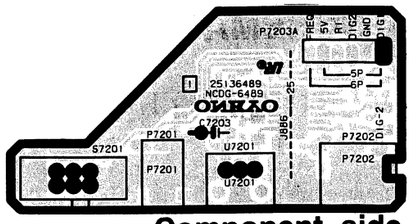

Component side

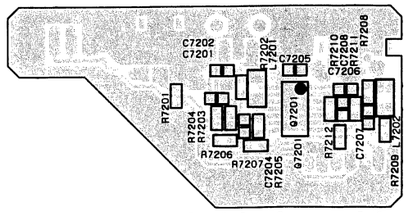

Soldering side

Digital input PC board

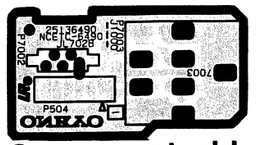

Component side

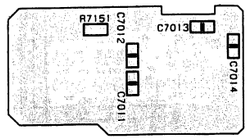

Soldering side

Headphone PC board

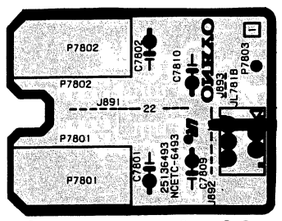

Component side

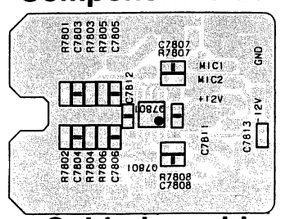

Soldering side

Mic. Input terminal PC board

SCHEMATIC DIAGRAM

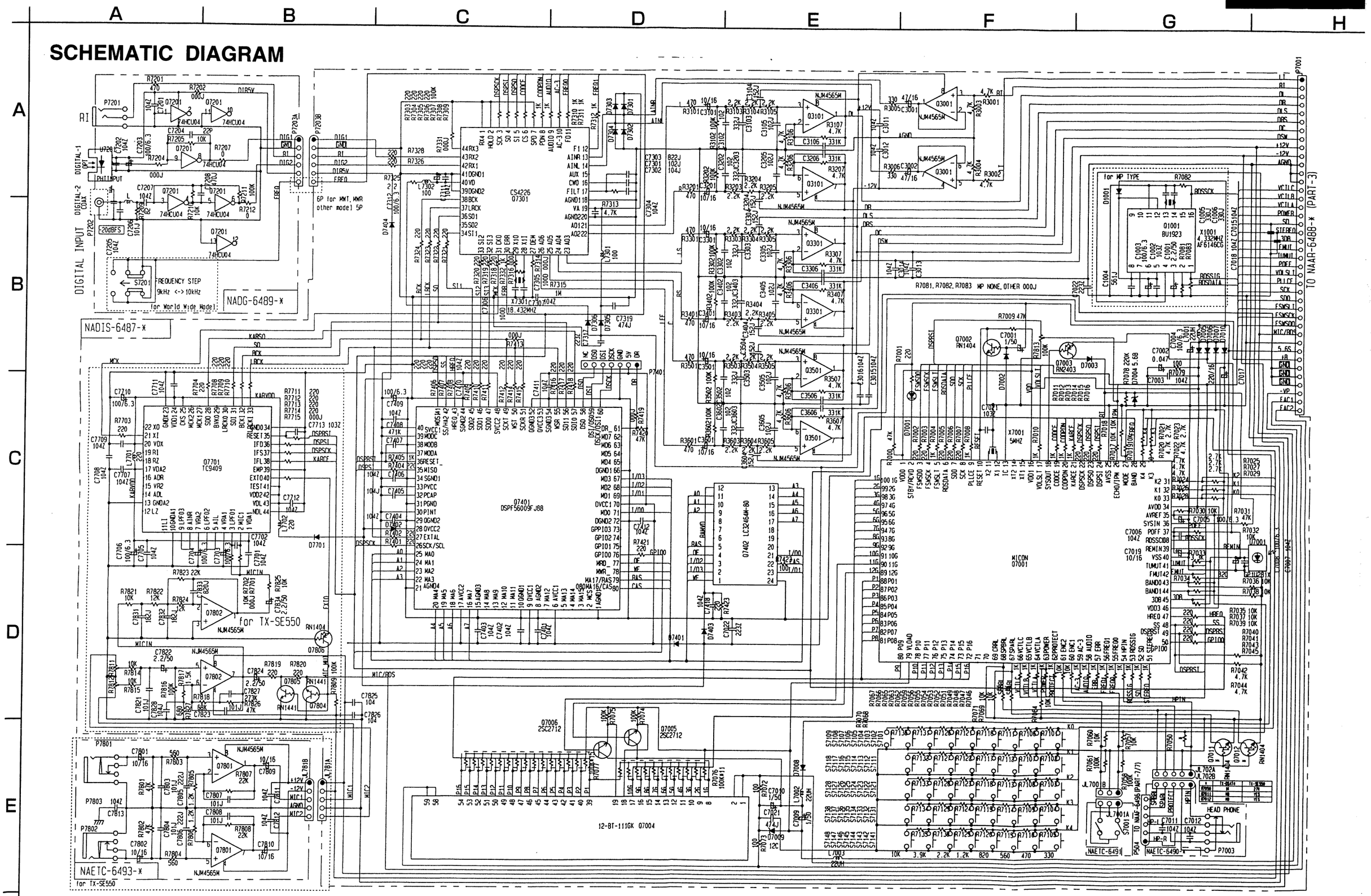

 TX-DS474 / TX-SE550

PRINTED CIRCUIT BOARD VIEW FROM SOLDERING SIDE

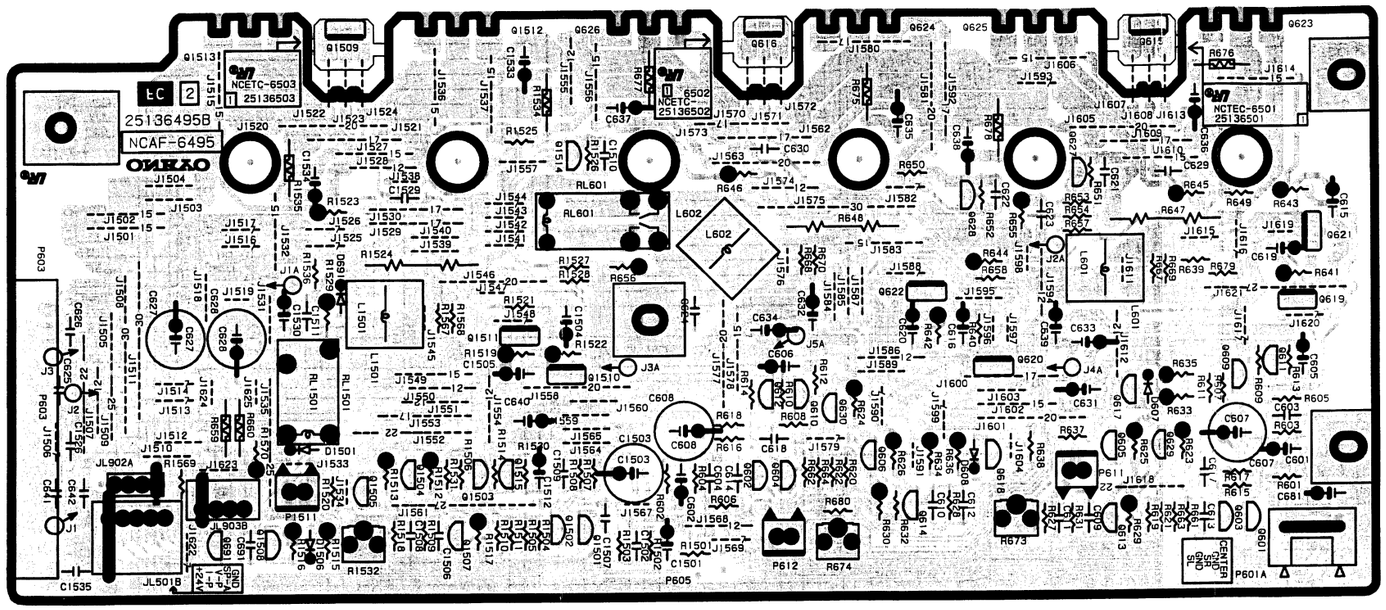

Power amplifier PC board

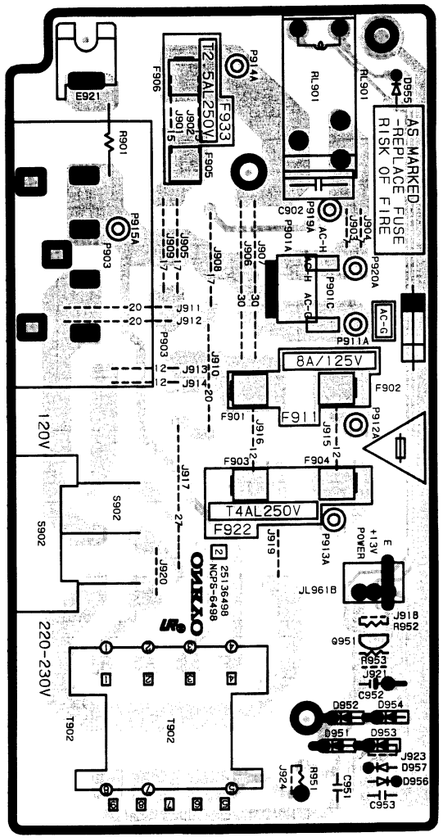

Primary circuit PC board

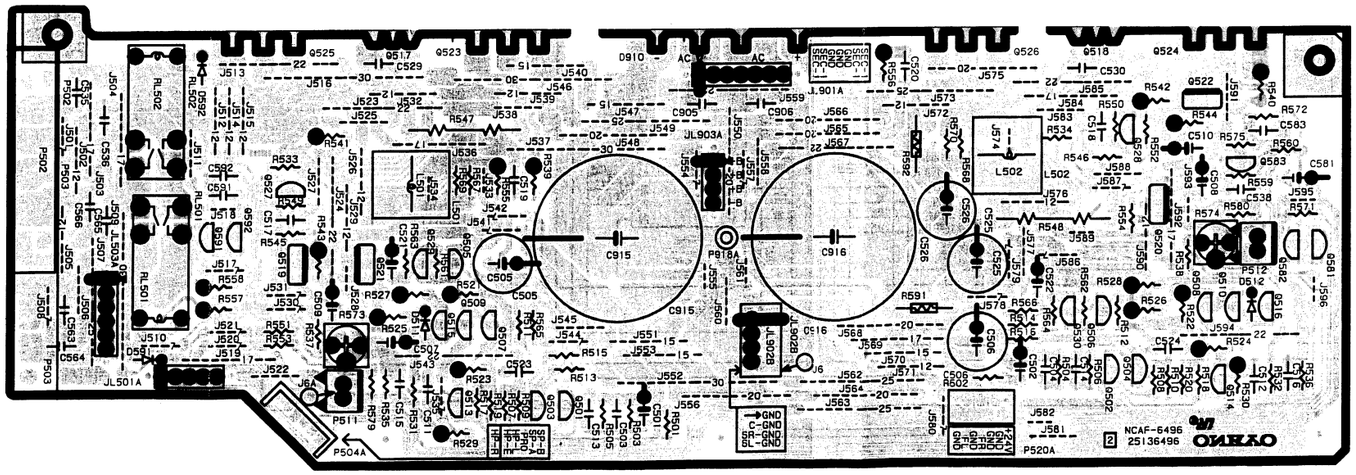

Front channel power amplifier PC board

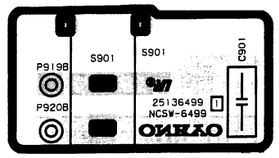

Power switch PC board

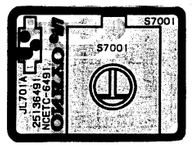

Volume PC board

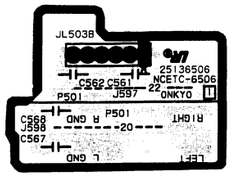

Speaker terminal PC board

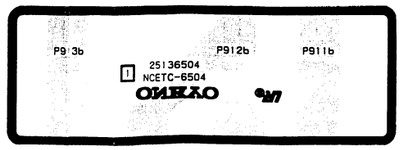

Transformer PC board

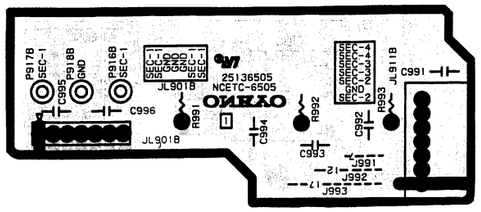

Secondary PC board

SCHEMATIC DIAGRAM

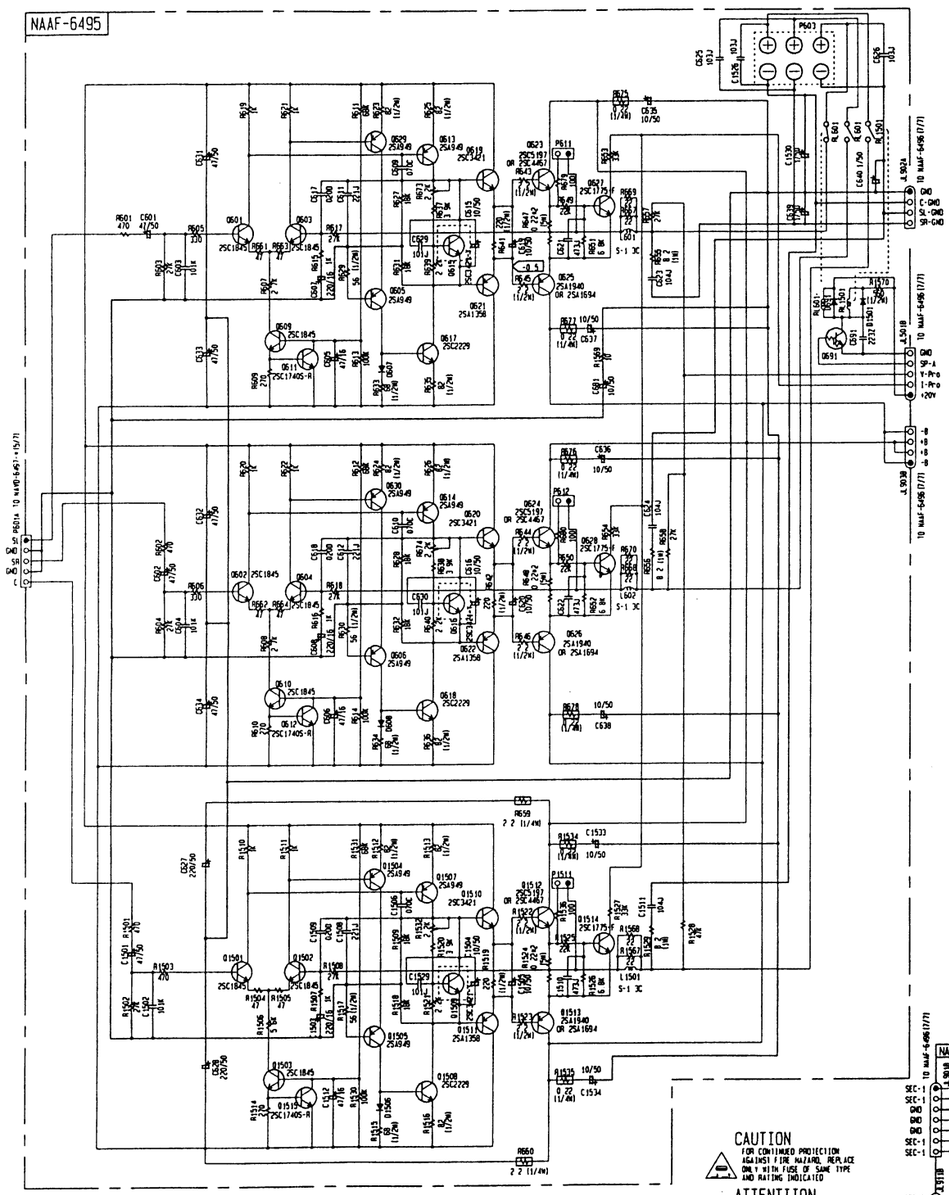

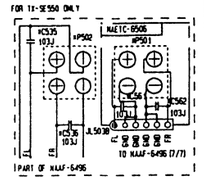

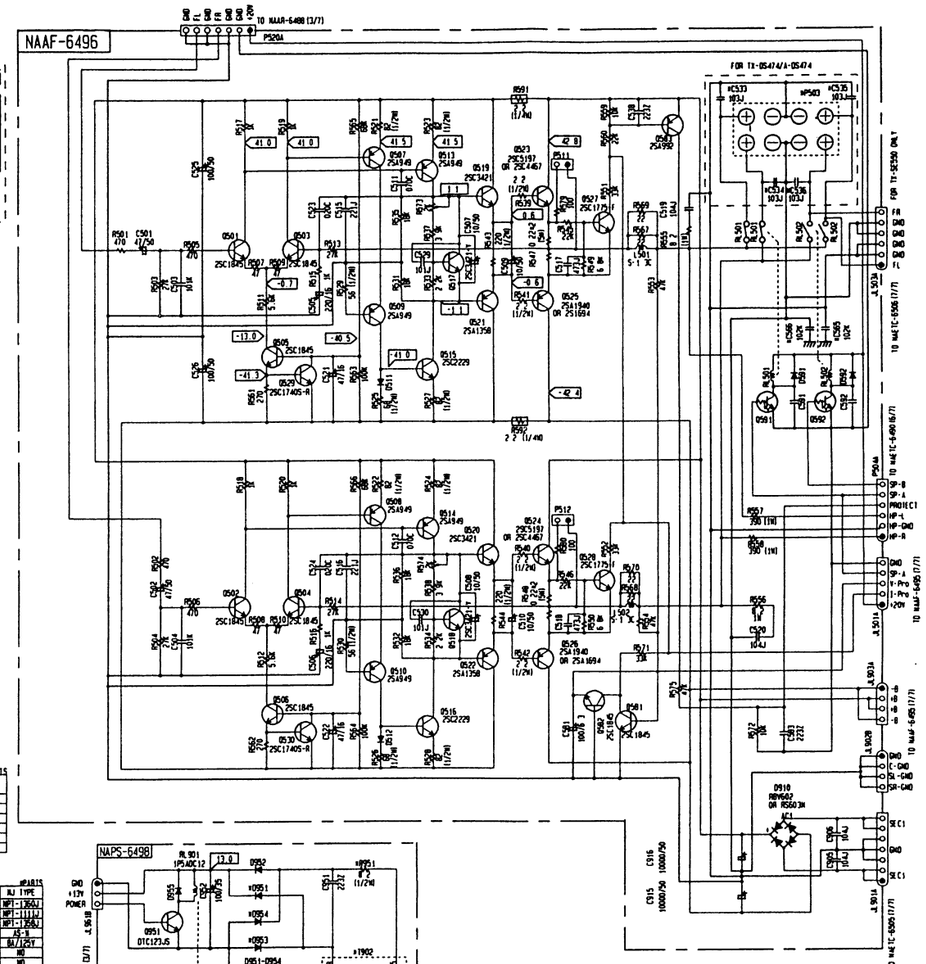

NAAF-6496	MD TYPE	MP/MPA	MWT/MWR	MJ	#P1815
C533	NO	YES	YES	NO	
C534	NO	YES	YES	NO	
C535	NO	YES	YES	NO	
C536	NO	YES	YES	NO	
R651	NO	YES	YES	NO	
R652	NO	YES	YES	NO	

NAPS-6498	MD TYPE	MP TYPE	MWT TYPE	MJ TYPE	#P1815
T901	MPT-13600	MPT-13600	MPT-136006	MPT-136MJ	
T902	MPT-12540	MPT-1111P	MPT-111106	MPT-111MJ	
T902 OR	MPT-12500	MPT-1350P	MPT-135006	MPT-135MJ	
F901	5S-VK	5S-VK	5S-VK	5S-VK	
F911	6.3A/125V	NO	8A/125V	8A/125V	
F912	NO	4A/250V	4A/250V	NO	
F913	NO	2.5A/250V	NO	NO	
D901	YES	NO	NO	NO	
D905	NO	YES	YES	NO	
D951	NO	YES	YES	NO	
D953	NO	YES	YES	NO	
D954	NO	YES	YES	NO	

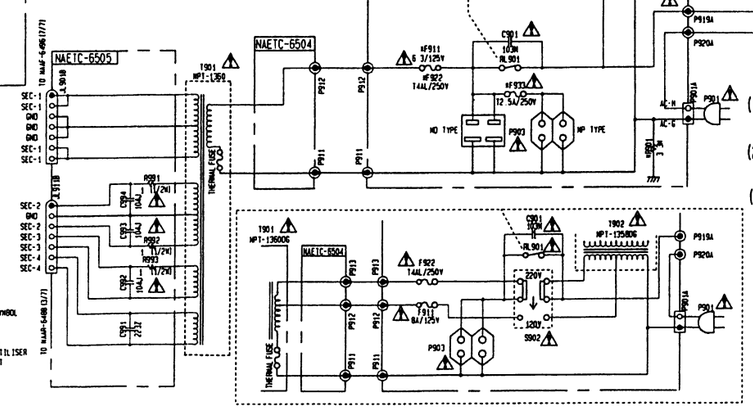

CAUTION
FOR CONTINUED PROTECTION AGAINST FIRE HAZARD, REPLACE ONLY WITH FUSE OF SAME TYPE AND RATING INDICATED

ATTENTION
AFIN D'ASSURER UNE PROTECTION PERMANENTE CONTRE LES RISQUES D'INCENDIE, REMPLACER UNIQUEMENT PAR UN FUSIBLE DE MEME TYPE ET CALIBRATION COMME INDIQUE

THIS SYMBOL LOCATED NEAR THE FUSE INDICATES THAT THE FUSE USED IS SLOW OPERATING TYPE. FOR CONTINUED PROTECTION AGAINST FIRE FUSE HAZARD, REPLACE WITH SAME TYPE FUSE. FOR FUSE RATING REFER TO THE MARKING ADJACENT TO THE SYMBOL

CE SYMBOLE INDIQUE QUE LE FUSIBLE UTILISE EST A LENT. E POUR UNE PROTECTION PERMANENTE, N'UTILISER QUE DES FUSIBLES DE MEME TYPE. CE DARNIER EST INDIQUE LA OU LE PRESENT SYMBOL EST APPOSE

EXPLODED VIEW

MODEL TX-DS474

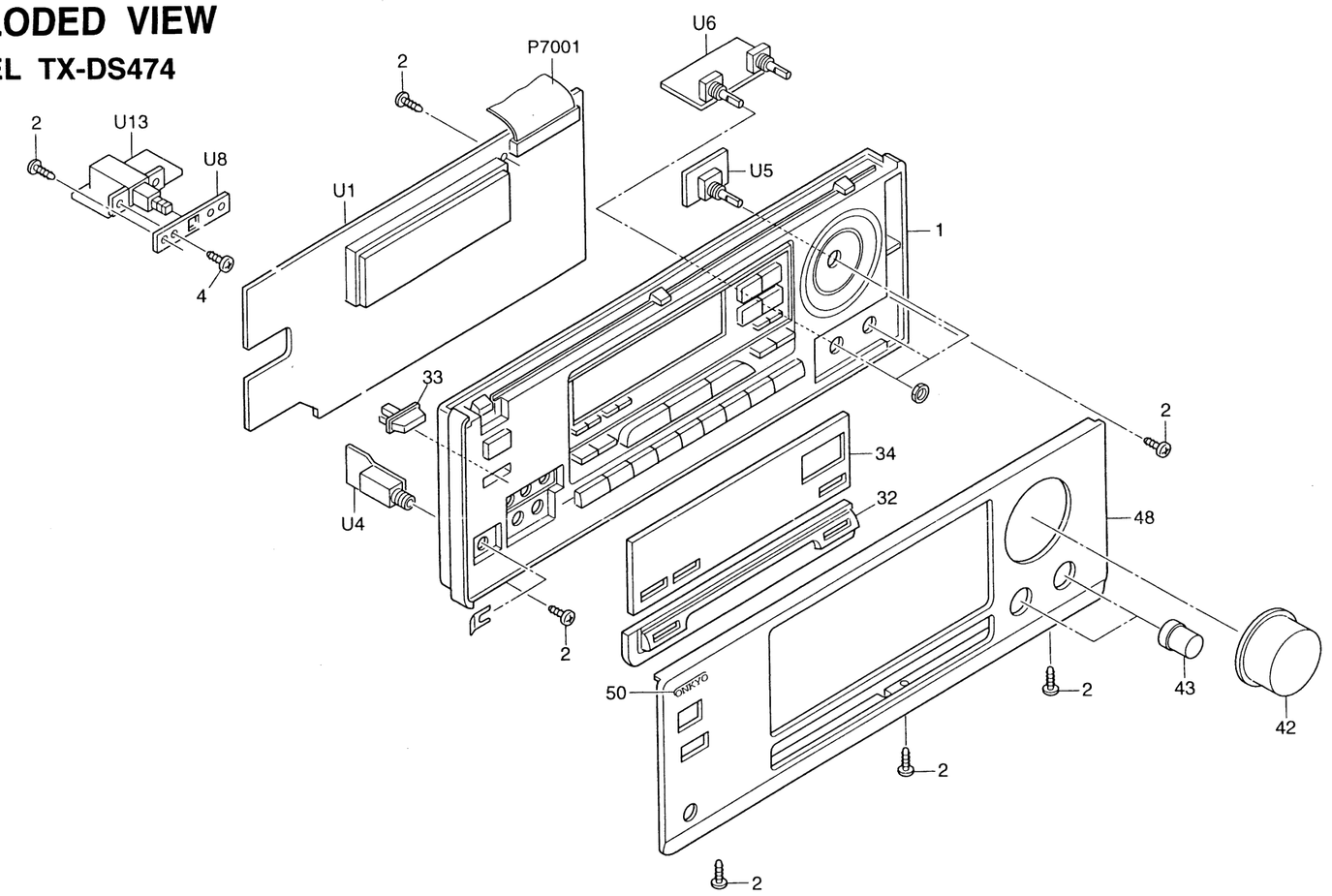

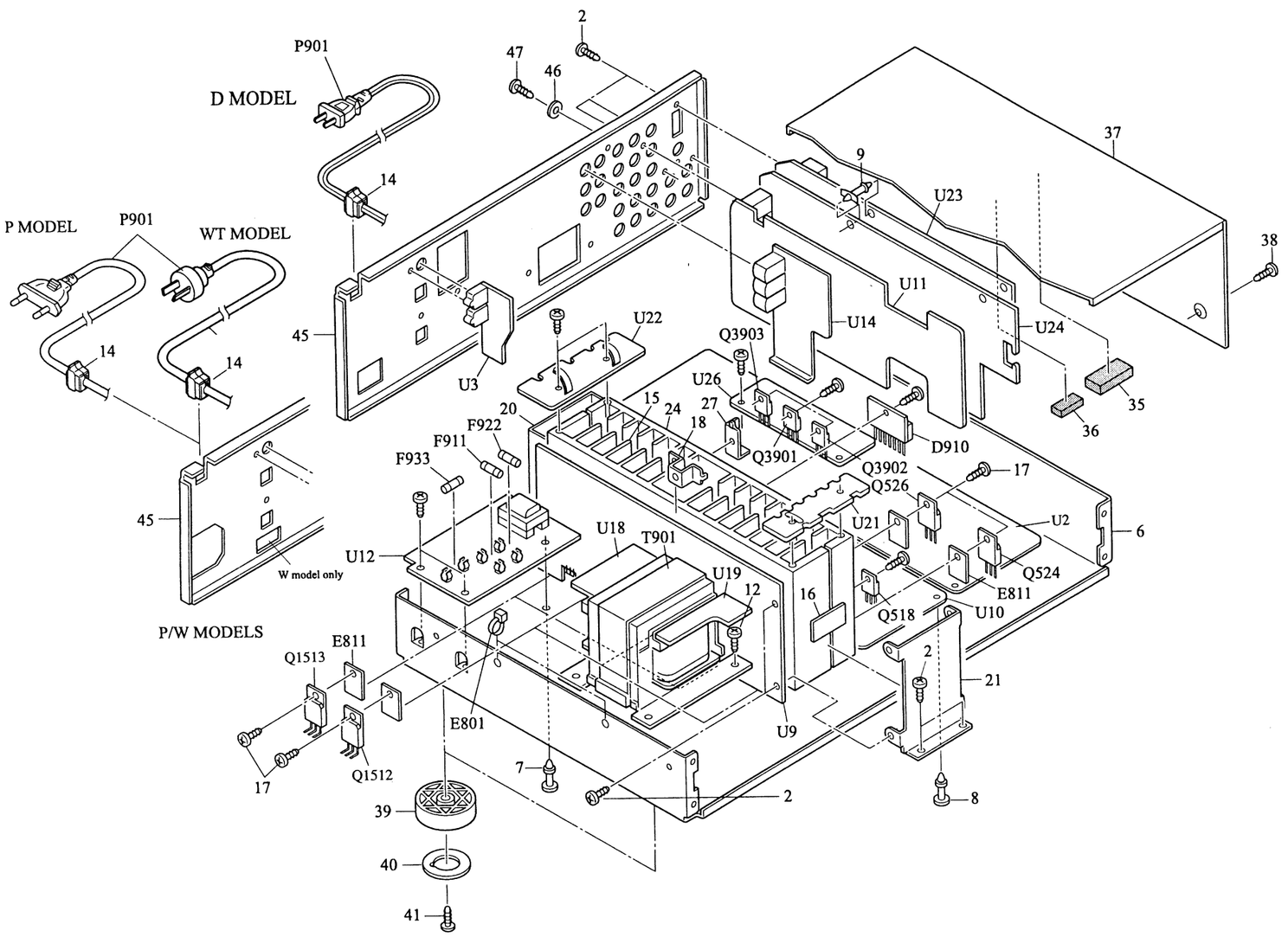

PARTS LIST

REF. NO.	PART NO.	DESCRIPTION
1	27111102A	Front bracket <B>
	27111106A	Front bracket <G>
	27111107A	Front bracket <S>
2	838130088	3TTB+8B,Self-tapping screw
4	82143010	3P+10FN(BC),Pan head screw
6	27100368B	Chassis
7	27190266	KGLS-12RF,Holder
8	27190428A	KGLS-10RF,Holder
9	27190896	KGLS-10S,Holder
12	830440089	4TTC+8C(BC),Self-tapping screw
14	27300750	⚠ Bushing, cord
15	27160435	Heat sink L
16	29110083	Adhesive tape
17	801433	3SMS8W.SW+14B(BC), Special screw
18	27141681	Retainer PWB
20	27141735	Retainer, Rear
21	27141734	Retainer, Front
24	27160436A	Heat sink S
27	27141729	Retainer S
29	29110083	Adhesive tape
32	27215316	Decorative frame <B>
	27215317	Decorative frame <G>
	27215318	Decorative frame <S>
33	28325497A	Knob, Power <B>
	28325499A	Knob, Power <G>
	28325547A	Knob, Power <S>
34	28191844	Clear plate <B>
	28191845	Clear plate <S/G>
35	28141272	10x60x20, Cushion
36	28140926	t 10x25x10, Cushion
37	28184663	Top cover <B>
	28184666	Top cover <S>
	28184682	Top cover <G>
38	838430088	3TTB+8B(BC),Self-tapping screw <B>
	838230088	3TTB+8B(NI),Nickel screw <G/S>
39	27175319A	Leg
40	28141332	Cushion for leg
41	831430088	3TTW+8B(BC),Self-tapping screw
42	28325641	Knob, Volume <B>
	28325642	Knob, Volume <S>
	28325643	Knob, Volume <G>
43	28325405	Knob, Tone <B>
	28325407	Knob, Tone <G>
	28325474	Knob, Tone <S>

REF. NO.	PART NO.	DESCRIPTION
44	27122562	Rear panel <D>
	27122563	Rear panel <P>
	27122564	Rear panel <T>
	27122565	Rear panel <WT>
	27122566	Rear panel <WR>
	27122567	Rear panel <A>
46	87643010	W3*10F(BC), Flat washer
47	838930088	3TTB+8B(UN),Self-tapping screw
48	27212081A	Front panel, black <D/T/WT/WR/A>
	27212082A	Front panel, black <P>
	27212083A	Front panel <G>
	27212085A	Front panel <S>
50	28135244	Badge <B>
	28135245	Badge <G/S>
D910	22380038 or	RBV602 or
	22380274	RS603M, Diode
E601	260208	Wire tie
E811	223024	⚠ AC238, Isolated sheet
F911	252166	⚠ 6.3A-UL/T-237,Fuse <D>
	252198	⚠ 8A-UL, Fuse <W>
F922	252077 or	⚠ 4A-SE-EAK or
	252243	⚠ 4A-SE-EAK,Fuse <P/W/T/A>
F933	252075 or	⚠ 2.5A-SE-EAK or
	252241	⚠ 2.5A-SE-EAK, Fuse <P/T>
P7001	2047402512	NCFC7-402512, Flexible flat cable
P901	253193HIT	⚠ AS-CEE, Power supply cord <P/T>
	253197HIT	⚠ AS-SAA, Power supply cord <A>
	253233KAW	⚠ AS-CEE-2, Power supply cord <WT>
	253267KAW	⚠ AS-CCEE, Power supply cord <WR>
	253279HIT	⚠ AS-UC-2#18, Power supply cord <D>
Q1512	2202253,	* 2SC4467-O,
Q523,Q524	2202254,	* 2SC4467-Y,
Q623,Q624	2202256,	* 2SC4467-P,
	2203042 or	* 2SC5197-R or
	2203043	* 2SC5197-O, Transistor
Q1513	2202243,	* 2SA1694-O,
Q525,Q526	2202244,	* 2SA1694-Y,
Q625,Q626	2202246,	* 2SA1694-P,
	2203032 or	* 2SA1940-R or
	2203033	* 2SA1940-O, Transistor
Q3901	222780125	78M12HF, IC
Q3902	222790125	79M12HF, IC
Q3903	222780065	78M06HF, IC

NOTE: <B>: Black model only
<S>: Silver model only
<G>: Golden model only
<D>: 120V model only
<P>: European model only
<W>: Worldwide model only
<T>: Asian model only
<WR>: Chinese model only
<WT>: Taiwanese model only
<A>: Australian model only

CAUTION: Replacement of the transistor of mark ✱, if necessary, must be made from the same beta group (HFE) as the original type.

REF. NO.	PART NO.	DESCRIPTION
Q517,Q518	2212654 or	2SC3421-Y or
	2212653	2SC3421-O, Transistor
T901	2301387	⚠ NPT-1360D, Power transformer <D>
	2301388	⚠ NPT-1360P, Power transformer <P/T/A>
	2301389	⚠ NPT-1360DG,Power transformer <W>
U1	1A801587-3A	NADIS-6487-3A,Display circuit PC board ass'y <D>
	1A801587-3B	NADIS-6487-3B,Display circuit PC board ass'y <P>
	1A801587-3C	NADIS-6487-3C,Display circuit PC board ass'y <T/A>
	1A801587-3D	NADIS-6487-3D,Display circuit PC board ass'y <W>
U2	1A801588-3A	NAAR-6488-3A,Surround switch PC board ass'y <D>
	1A801588-3B	NAAR-6488-3B,Surround switch PC board ass'y <P>
	1A801588-3C	NAAR-6488-3C,Surround switch PC board ass'y <T/A>
	1A801588-3D	NAAR-6488-3D,Surround switch PC board ass'y <W>
U3	1A801589-3A	NADG-6489-3A,Digital input PC board ass'y <D>
	1A801589-3B	NADG-6489-3B,Digital input PC board ass'y <P>
	1A801589-3C	NADG-6489-3C,Digital input PC board ass'y <T/A>
	1A801589-3D	NADG-6489-3D,Digital input PC board ass'y <W>
U4	1A801590-3A	NAETC-6490-3A,Headphone terminal PC board ass'y <D>
	1A801590-3B	NAETC-6490-3B,Headphone terminal PC board ass'y <P>
	1A801590-3C	NAETC-6490-3C,Headphone terminal PC board ass'y <T/A>
	1A801590-3D	NAETC-6490-3D,Headphone terminal PC board ass'y <W>
U5	1A801591-3A	NAETC-6491-3A,Volume PC board ass'y <D>
	1A801591-3B	NAETC-6491-3B,Volume PC board ass'y <P>
	1A801591-3C	NAETC-6491-3C,Volume PC board ass'y <T/A>
	1A801591-3D	NAETC-6491-3D,Volume PC board ass'y <W>
U6	1A801592-3A	NAETC-6492-3A,Tone control circuit PC board ass'y <D>
	1A801592-3B	NAETC-6492-3B,Tone control circuit PC board ass'y <P>
	1A801592-3C	NAETC-6492-3C,Tone control circuit PC board ass'y <T/A>
	1A801592-3D	NAETC-6492-3D,Tone control circuit PC board ass'y <W>
U8	1A801594-3A	NAETC-6494-3A, Terminal PC board ass'y <D>
	1A801594-3B	NAETC-6494-3B, Terminal PC board ass'y <P>
	1A801594-3C	NAETC-6494-3C, Terminal PC board ass'y <A>
	1A801594-3D	NAETC-6494-3D, Terminal PC board ass'y <W>
U9	1A801595-3A	NAAF-6495-3A,Power amplifier PC board ass'y <D>
	1A801595-3B	NAAF-6495-3B,Power amplifier PC board ass'y <P>
	1A801595-3C	NAAF-6495-3C,Power amplifier PC board ass'y <A>
	1A801595-3D	NAAF-6495-3D,Power amplifier PC board ass'y <W>
U10	1A801596-3A	NAAF-6496-3A,Front channel power amplifier PC board ass'y <D>
	1A801596-3B	NAAF-6496-3B,Front channel power amplifier PC board ass'y <P>
	1A801596-3C	NAAF-6496-3C,Front channel power amplifier PC board ass'y <A>
	1A801596-3D	NAAF-6496-3D,Front channel power amplifier PC board ass'y <W>

NOTE: THE COMPONENTS IDENTIFIDE BY MARK ⚠ ARE CRITICAL FOR RISK OF FIRE AND ELECTRIC SHOCK. REPLACE ONLY WITH PART NUMBER SPECIFIED.

REF. NO.	PART NO.	DESCRIPTION
U11	1A801597-3A	NAVD-6497-3A,Volume circuit PC board ass'y <D>
	1A801597-3B	NAVD-6497-3B,Volume circuit PC board ass'y <P>
	1A801597-3C	NAVD-6497-3C,Volume circuit PC board ass'y <T/A>
	1A801597-3D	NAVD-6497-3D,Volume circuit PC board ass'y <W>
U12	1A801598-3A	NAPS-6498-3A,Primary circuit PC board ass'y <D>
	1A801598-3B	NAPS-6498-3B,Primary circuit PC board ass'y <P>
	1A801598-3C	NAPS-6498-3C,Primary circuit PC board ass'y <T/A>
	1A801598-3D	NAPS-6498-3D,Primary circuit PC board ass'y <W>
U13	1A801599-3A	NASW-6499-3A,Power switch PC board ass'y <D>
	1A801599-3B	NASW-6499-3B,Power switch PC board ass'y <P>
	1A801599-3C	NASW-6499-3C,Power switch PC board ass'y <T/A>
	1A801599-3D	NASW-6499-3D,Power switch PC board ass'y <W>
U14	1A801500-3A	NAAF-6500-3A,Multi-channel terminal PC board ass'y <D>
	1A801500-3B	NAAF-6500-3B,Multi-channel terminal PC board ass'y <P>
	1A801500-3C	NAAF-6500-3C,Multi-channel terminal PC board ass'y <T/A>
	1A801500-3D	NAAF-6500-3D,Multi-channel terminal PC board ass'y <W>
U18	1A801504-3A	NAETC-6504-3A, Transformer PC board ass'y <D>
	1A801504-3B	NAETC-6504-3B, Transformer PC board ass'y <P>
	1A801504-3C	NAETC-6504-3C, Transformer PC board ass'y <T/A>
	1A801504-3D	NAETC-6504-3D, Transformer PC board ass'y <W>
U19	1A801505-3A	NAETC-6505-3A, Secondary PC board ass'y <D>
	1A801505-3B	NAETC-6505-3B, Secondary PC board ass'y <P>
	1A801505-3C	NAETC-6505-3C, Secondary PC board ass'y <T/A>
	1A801505-3D	NAETC-6505-3D, Secondary PC board ass'y <W>
U21	1A801507-3A	NAETC-6507-3A, Terminal PC board ass'y <D>
	1A801507-3B	NAETC-6507-3B, Terminal PC board ass'y <P>
	1A801507-3C	NAETC-6507-3C, Terminal PC board ass'y <T/A>
	1A801507-3D	NAETC-6507-3D, Terminal PC board ass'y <W>
U22	1A801508-3A	NAETC-6508-3A, Terminal PC board ass'y <D>
	1A801508-3B	NAETC-6508-3B, Terminal PC board ass'y <P>
	1A801508-3C	NAETC-6508-3C, Terminal PC board ass'y <T/A>
	1A801508-3D	NAETC-6508-3D, Terminal PC board ass'y <W>
U23	1A801509-3A	NARF-6509-3A,Tuner PC board ass'y <D>
	1A801509-3B	NARF-6509-3B,Tuner PC board ass'y <P>
	1A801509-3C	NARF-6509-3C,Tuner PC board ass'y <T/A>
	1A801509-3D	NARF-6509-3D,Tuner PC board ass'y <W>
U24	1A801510-3A	NAAF-6510-3A,Selector circuit PC board ass'y <D>
	1A801510-3B	NAAF-6510-3B,Selector circuit PC board ass'y <P>
	1A801510-3C	NAAF-6510-3C,Selector circuit PC board ass'y <T/A>
	1A801510-3D	NAAF-6510-3D,Selector circuit PC board ass'y <W>
U26	1A801534-3A	NAPS-6534-3A,Regulator PC board ass'y <D>
	1A801534-3B	NAPS-6534-3B,Regulator PC board ass'y <P>
	1A801534-3C	NAPS-6534-3C,Regulator PC board ass'y <T/A>
	1A801534-3D	NAPS-6534-3D,Regulator PC board ass'y <W>

EXPLODED VIEW

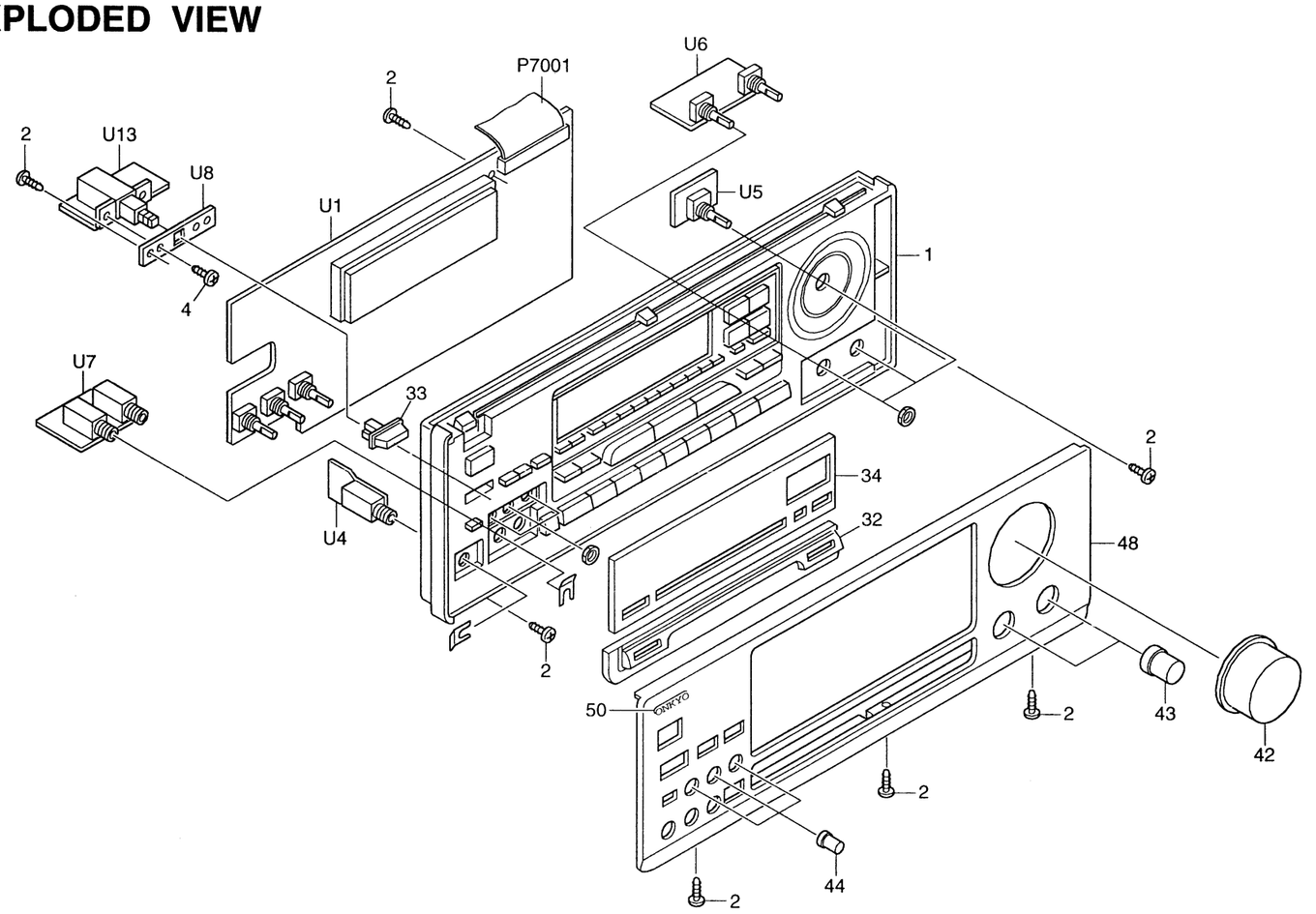

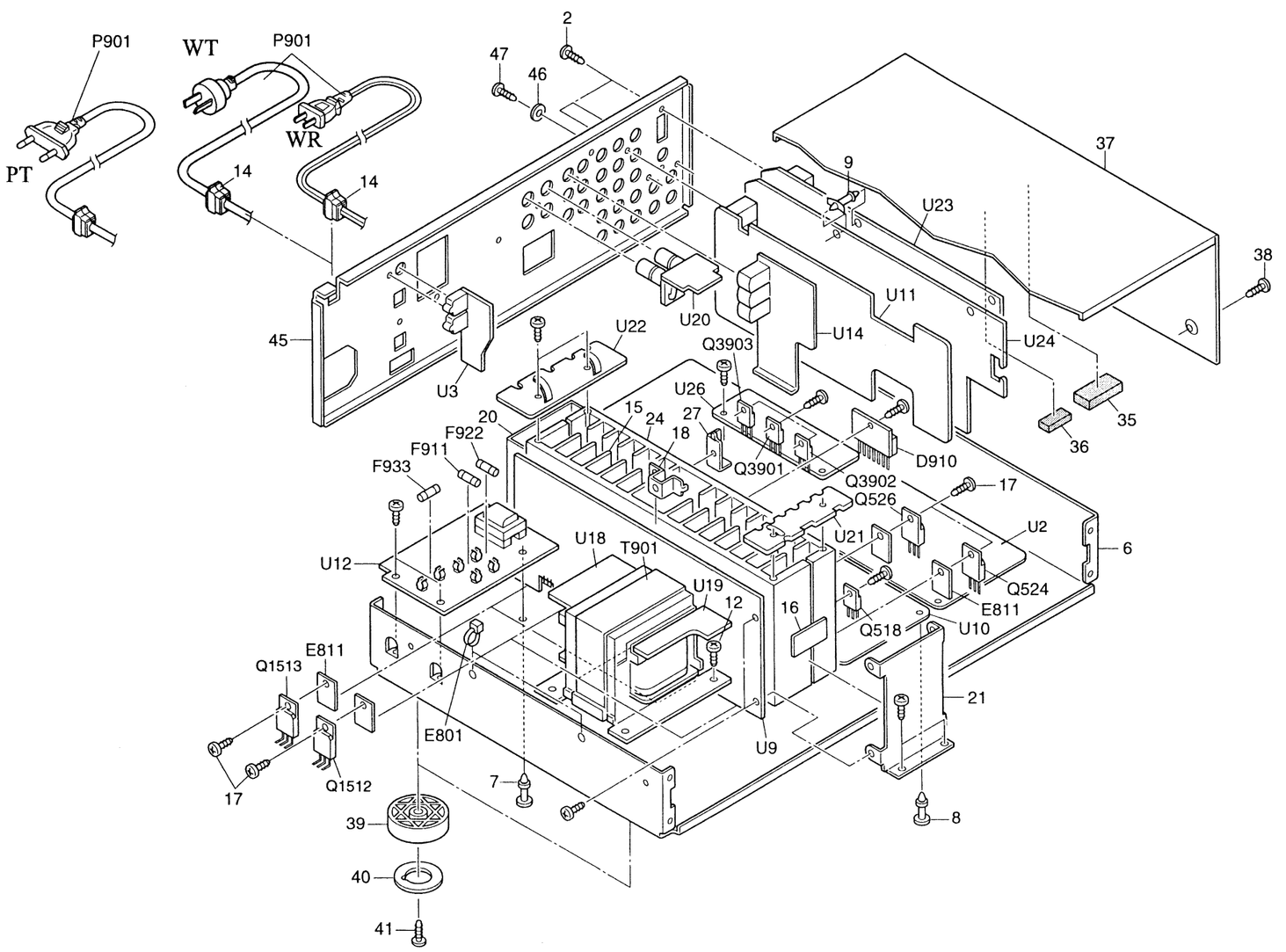

PARTS LIST

REF. NO.	PART NO.	DESCRIPTION
1	27111103A	Front bracket <B>
	27111104A	Front bracket <G>
2	838130088	3TTB+8B,Self-tapping screw
4	82143010	3P+10FN(BC),Pan head screw
6	27100368B	Chassis
7	27190266	KGLS-12RF,Holder
8	27190428A	KGLS-10RF,Holder
9	27190896	KGLS-10S,Holder
12	830440089	4TTC+8C(BC),Self-tapping screw
14	27300750	⚠ Bushing, cord
15	27160435	Heat sink L
16	29110083	Adhesive tape
17	801433	3SMS8W.SW+14B(BC), Special screw
18	27141681	Retainer PWB
20	27141735	Retainer, Rear
21	27141734	Retainer, Front
24	27160436A	Heat sink S
27	27141729	Retainer S
29	29110083	Adhesive tape
32	27215313	Decorative frame <B>
	27215314	Decorative frame <G>
33	28325497A	Knob, Power <B>
	28325499A	Knob, Power <G>
34	28191842A	Clear plate <B>
	28191843A	Clear plate <G>
35	28141272	10x60x20, Cushion
36	28140926	10x25x10, Cushion
37	28184663	Top cover <B>
37	28184682	Top cover <G>
38	838430088	3TTB+8B(BC),Self-tapping screw <B>
	838230088	3TTB+8B(NI),Nickel screw <G>
39	27175319A	Leg
40	28141332	Cushion for leg
41	831430088	3TTW+8B(BC),Self-tapping screw
42	28325641	Knob, Volume <B>
	28325643	Knob, Volume <G>

REF. NO.	PART NO.	DESCRIPTION
43	28325405	Knob, Tone <B>
	28325474	Knob, Tone <S>
44	28325452	Knob, Mic. <B>
	28325495	Knob, Mic. <G>
45	27122551A	Rear panel <P>
	27122552A	Rear panel <WT>
	27122553A	Rear panel <WR>
46	87643010	W3*10F(BC), Flat washer
47	838930088	3TTB+8B(UN),Self-tapping screw
48	27212071A	Front panel <B>
	27212072A	Front panel <G>
49	29110029	Double faced tape
50	28135244	Badge <B>
	28135245	Badge <G>
D910	22380038 or	RBV602 or
	22380274	RS603M, Diode
E801	260208	Wire tie
E811	223024	⚠ AC238, Isolated sheet
F911	252198	⚠ 8A-UL, Fuse <W>
F922	252077 or	⚠ 4A-SE-EAK or
	252243	⚠ 4A-SE-EAK,Fuse
F933	252075 or	⚠ 2.5A-SE-EAK or
	252241	⚠ 2.5A-SE-EAK, Fuse <P>
P7001	2047402512	NCFC7-402512, Flexible flat cable
P901	253193HIT	⚠ AS-CEE, Power supply cord <P>
	253233KAW	⚠ AS-CEE-2, Power supply cord <WT>
	253267KAW	⚠ AS-CCEE, Power supply cord <WR>
Q1512	2202253,	* 2SC4467-O,
Q523,Q524	2202254,	* 2SC4467-Y,
Q623,Q624	2202256,	* 2SC4467-P,
	2203042 or	* 2SC5197-R or
	2203043	* 2SC5197-O, Transistor
Q1513	2202243,	* 2SA1694-O,
Q525,Q526	2202244,	* 2SA1694-Y,
Q625,Q626	2202246,	* 2SA1694-P,
	2203032 or	* 2SA1940-R or
	2203033	* 2SA1940-O, Transistor

REF. NO.	PART NO.	DESCRIPTION
Q3901	222780125	78M12HF, IC
Q3902	222790125	79M12HF, IC
Q3903	222780065	78M06HF, IC
Q517,Q518	2212654 or	2SC3421-Y or
	2212653	2SC3421-O, Transistor
T901	2301388	⚠ NPT-1360P, Power transformer <P>
	2301389	⚠ NPT-1360DG,Power transformer <W>
U1	1A805587-4A	NADIS-6487-4A,Display circuit PC board ass'y <P>
	1A805587-4B	NADIS-6487-4B,Display circuit PC board ass'y <W>
U2	1A805588-4A	NAAR-6488-4A,Surround switch PC board ass'y <P>
	1A805588-4B	NAAR-6488-4B,Surround switch PC board ass'y <W>
U3	1A805589-4A	NADG-6489-4A,Digital input PC board ass'y <P>
	1A805589-4B	NADG-6489-4B,Digital input PC board ass'y <W>
U4	1A805590-4A	NAETC-6490-4A,Headphone PC board ass'y <P>
	1A805590-4B	NAETC-6490-4B,Headphone PC board ass'y <W>
U5	1A805591-4A	NAETC-6491-4A,Volume PC board ass'y <P>
	1A805591-4B	NAETC-6491-4B,Volume PC board ass'y <W>
U6	1A805592-4A	NAETC-6492-4A,Tone control circuit PC board ass'y <P>
	1A805592-4B	NAETC-6492-4B,Tone control circuit PC board ass'y <W>
U7	1A805593-4A	NAETC-6493-4A,Mic. Input terminal PC board ass'y <P>
	1A805593-4B	NAETC-6493-4B,Mic. Input terminal PC board ass'y <W>
U8	1A805594-4A	NAETC-6494-4A, Terminal PC board ass'y <P>
	1A805594-4B	NAETC-6494-4B, Terminal PC board ass'y <W>
U9	1A805595-4A	NAAF-6495-4A,Power amplifier PC board ass'y <P>
	1A805595-4B	NAAF-6495-4B,Power amplifier PC board ass'y <W>
U10	1A805596-4A	NAAF-6496-4A,Front channel power amplifier PC board ass'y <P>
	1A805596-4B	NAAF-6496-4B,Front channel power amplifier PC board ass'y <W>
U11	1A805597-4A	NAVD-6497-4A,Volume circuit PC board ass'y <P>
	1A805597-4B	NAVD-6497-4B,Volume circuit PC board ass'y <W>
U12	1A805598-4A	NAPS-6498-4A,Primary circuit PC board ass'y <P>
	1A805598-4B	NAPS-6498-4B,Primary circuit PC board ass'y <W>

REF. NO.	PART NO.	DESCRIPTION
U13	1A805599-4A	NASW-6499-4A,Power switch PC board ass'y <P>
	1A805599-4B	NASW-6499-4B,Power switch PC board ass'y <W>
U14	1A805500-4A	NAAF-6500-4A,Multi-channel terminal PC board ass'y <P>
	1A805500-4B	NAAF-6500-4B,Multi-channel terminal PC board ass'y <W>
U18	1A805504-4A	NAETC-6504-4A, Transformer PC board ass'y <P>
	1A805504-4B	NAETC-6504-4B, Transformer PC board ass'y <W>
U19	1A805505-4A	NAETC-6505-4A, Secondary PC board ass'y <P>
	1A805505-4B	NAETC-6505-4B, Secondary PC board ass'y <W>
U20	1A805506-4A	NAETC-6506-4A,Speaker terminal PC board ass'y <P>
	1A805506-4B	NAETC-6506-4B,Speaker terminal PC board ass'y <W>
U21	1A805507-4A	NAETC-6507-4A, Terminal PC board ass'y <P>
	1A805507-4B	NAETC-6507-4B, Terminal PC board ass'y <W>
U22	1A805508-4A	NAETC-6508-4A, Terminal PC board ass'y <P>
	1A805508-4B	NAETC-6508-4B, Terminal PC board ass'y <W>
U23	1A805509-4A	NARF-6509-4A,Tuner PC board ass'y <P>
	1A805509-4B	NARF-6509-4B,Tuner PC board ass'y <W>
U24	1A805510-4A	NAAF-6510-4A,Selector circuit PC board ass'y <P>
	1A805510-4B	NAAF-6510-4B,Selector circuit PC board ass'y <W>
U26	1A805534-4A	NAPS-6534-4A,Regulator PC board ass'y <P>
	1A805534-4B	NAPS-6534-4B,Regulator PC board ass'y <W>

NOTE: <B>: Black model only
<G>: Golden model only
<P>: Asian model only
<W>: Worldwide model only
<WT>: Taiwanese model only
<WR>: Chinese model only

CAUTION: Replacement of the transistor of mark *, if necessary, must be made from the same beta group (HFE) as the original type.

NOTE: THE COMPONENTS IDENTIFIDE BY MARK ⚠ ARE CRITICAL FOR RISK OF FIRE AND ELECTRIC SHOCK. REPLACE ONLY WITH PART NUMBER SPECIFIED.

PACKING VIEW
MODEL TX-DS474

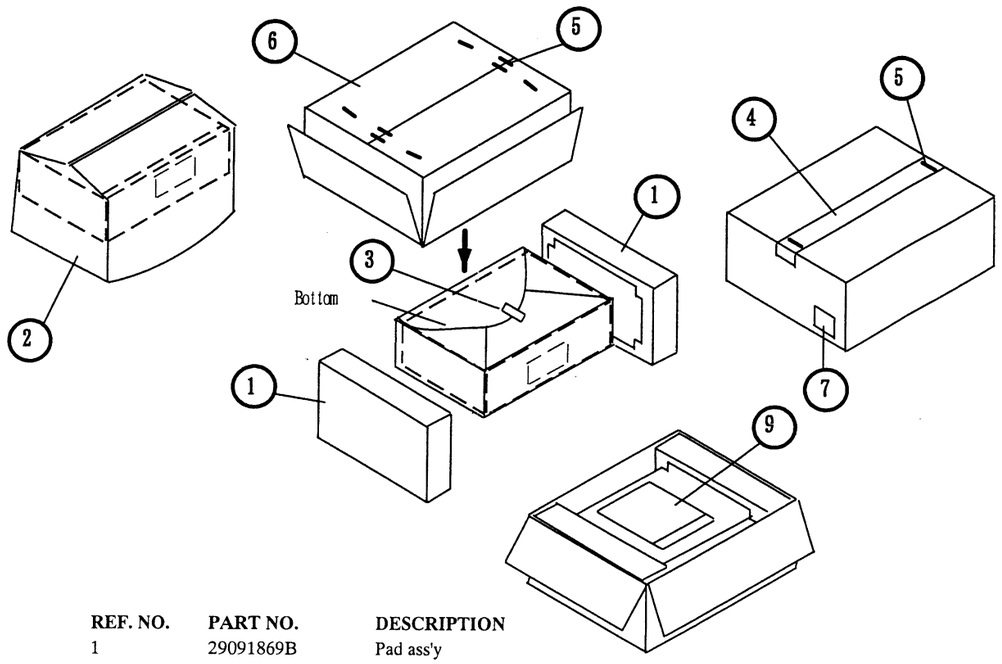

REF. NO.	PART NO.	DESCRIPTION
1	29091869B	Pad ass'y
2	29100034-1A	850*650, Styrene bag
3	261504	Paper tape
4	29110071	PP tape
5	282301	Staple
6	29053406	Carton box <D>
	29053407	Carton box <P>
	29053408	Carton box <T/W/A>
	29053409	Carton box <G>
	29053412	Carton box <S>
7	29362423	Label UPC board ass'y <D>
	29362426	Label EAN <B>
	29362427	Label EAN <G>
	29362429	Label EAN <S>
9	29100097-1A	350*250,Styrene bag
	29365019B	Warranty card <D>
	29358002K	Service station list <D>
	29342663	Instruction manual E
	29342664	Instruction manual GDSW <P>
	29342665	Instruction manual FSI <P>
	29342666	Instruction manual T <W>
	24140385	RC-385S, Remote controller
	3010054	UM-3, Battery
	232140	NMA-3057, AM loop antenna
	292112	FM antenna
	25055018	CV-K-1, Conversion plug <W>
	25065462	YAE21-0237, Antenna adapter <T/W/A>

NOTE: <B>: Black model only
<S>: Silver model only
<G>: Golden model only
<D>: 120V model only
<P>: European model only
<W>: Worldwide model only
<T>: Asian model only
<A>: Australian model only

PACKING VIEW

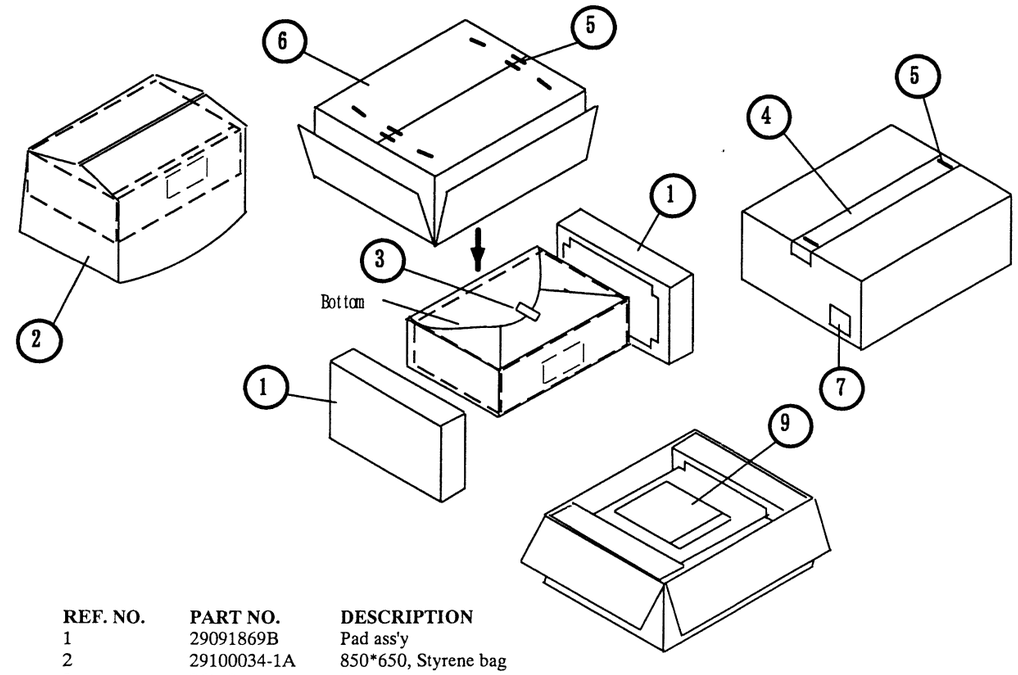

REF. NO.	PART NO.	DESCRIPTION
1	29091869B	Pad ass'y
2	29100034-1A	850*650, Styrene bag
3	261504	Paper tape
4	29110071	PP tape
5	282301	Staple
6	29053391	Carton box <B>
	29053392	Carton box <G>
7	29362399	Label EAN <B>
	29362400	Label EAN <G>
9	29100097-1A	350*250,Styrene bag
	29342668	Instruction manual
	29342669	Instruction manual T
	24140386	RC-386M, Remote controller
	3010194	UM-3, Battery
	232140	NMA-3057, AM loop
	292112	FM antenna
	25055018	CV-K-1, Conversion plug <W>
	25065462	YAE21-0237, Antenna adapter <W>

NOTE: <B>: Black model only
<G>: Golden model only
<W>: Worldwide model only

ONKYO CORPORATION

International Sales Div.: 31 Sankyo-bild. 3-8-5, Asakusabashi, Taito-ku, TOKYO 111, JAPAN
TEL : 03-5820-5865 FAX : 03-5820-5869

ONKYO U.S.A. CORPORATION
200 Williams Drive, Ramsey, N.J. 07446, U.S.A.
TEL : 201-825-7950 FAX : 201-825-8150

ONKYO EUROPE ELECTRONICS GmbH
Industriestrasse 18-20, 82110 Germering, GERMANY
TEL : 089 84 93 20 FAX : 089 84 93 226

PN 0M3615 N903 Printed in Japan