Pioneer

Service Manual

ORDER NO.
RRV2378

AUDIO/VIDEO MULTI-CHANNEL RECEIVER

VSX-859RDS
VSX-859RDS-G

THIS MANUAL IS APPLICABLE TO THE FOLLOWING MODEL(S) AND TYPE(S).

Type	Model		Power Requirement	The voltage can be converted by the following method.
	VSX-859RDS	VSX-859RDS-G		
HYXJI	○	○	AC220-230V	AC240V, *
HVXJI	○	–	AC230V	AC240V, *

* : Alter the wiring of the Power-supply block at the primary winding of Power-transformer referring to the "Line Voltage Selection" described in Service Manual.

● This service manual should be used together with the following manual(s):

Model No.	Order No.	Remarks
VSX-35TX/KUXJI/CA	RRV2351	

CONTENTS

1. CONTRAST OF MISCELLANEOUS PARTS ····· 2
2. PCB CONNECTION DIAGRAM ····· 10
3. SCHEMATIC DIAGRAM ····· 12
4. REMOTE CONTROL UNIT ····· 34

PIONEER CORPORATION 4-1, Meguro 1-chome, Meguro-ku, Tokyo 153-8654, Japan
PIONEER ELECTRONICS SERVICE, INC. P.O. Box 1760, Long Beach, CA 90801-1760, U.S.A.
PIONEER ELECTRONIC NV Haven 1087, Keetberglaan 1, 9120 Melsele, Belgium
PIONEER ELECTRONICS ASIACENTRE PTE. LTD. 253 Alexandra Road, #04-01, Singapore 159936

© PIONEER CORPORATION 2000

T – ZZR SEPT. 2000

http://www.manualscenter.com

1. CONTRAST OF MISCELLANEOUS PARTS

NOTES:
- *Parts marked by "NSP" are generally unavailable because they are not in our Master Spare Parts List.*
- *The ⚠ mark found on some component parts indicates the importance of the safety factor of the part. Therefore, when replacing, be sure to use parts of identical designation.*
- *Screws adjacent to ▼ mark on product are used for disassembly.*
- *Reference Nos. indicate the pages and Nos. in the service manual for the base model.*
- *When ordering resistors, first convert resistance values into code form as shown in the following examples.*

Ex.1 When there are 2 effective digits (any digit apart from 0), such as 560 ohm and 47k ohm (tolerance is shown by J=5%, and K=10%).

560 → 56 x 10^1 → 561 ..... RD1/4PU[5][6][1]J
47k → 47 x 10^3 → 473 ..... RD1/4PU[4][7][3]J
0.5 → R50 ..... RN2H[R][5][0]K
1 → 1R0 ..... RS1P[1][R][0]K

Ex.2 When there are 3 effective digits (such as in high precision metal film resistors).

5.62k → 562 x 10^1 → 5621 ..... RN1/4PC[5][6][2][1]F

■ CONTRAST TABLE

VSX-35TX/KUXJI/CA, VSX-859RDS/HYXJI, VSX-859RDS/HVXJI and VSX-859RDS-G/HYXJI are constructed the same except for the following:

Ref. No.	Mark	Symbol and Description	Part No.				Remarks
			VSX-35TX /KUXJI/CA	VSX-859RDS /HYXJI	VSX-859RDS /HVXJI	VSX-859RDS-G /HYXJI	
		PCB ASSEMBLIES					
P5- 1		FM/AM TUNER UNIT	AXQ7231	AXQ7232	AXQ7232	AXQ7232	
	NSP	MAIN ASSY	AWK7591	AWK7603	AWK7603	AWK7603	
P5- 5		├MAIN CONTROL ASSY	AWX7560	AWX7594	AWX7594	AWX7594	
P5-12		└DSP ASSY	AWX7561	AWX7595	AWX7595	AWX7595	
	NSP	COMPLEX ASSY	AWK7592	AWK7604	AWK7607	AWK7604	
P5- 2		├EX I/O(7.1CH I/O) ASSY	AWX7568	AWX7597	AWX7597	AWX7597	
P5- 6		├ A- CONNECTION ASSY	AWX7566	AWX7584	AWX7584	AWX7584	
P5-12		├ REGULATOR ASSY	AWX7562	AWX7806	AWX7806	AWX7806	
P5-15		└ PRIMARY ASSY	AWX7563	AWX7596	AWX7604	AWX7596	
	NSP	POWER ASSY	AWK7593	AWK7605	AWK7605	AWK7605	
P5- 4		├ INPUT ASSY	AWX7573	AWX7600	AWX7600	AWX7600	
P5-10		├ SP/PS ASSY	AWX7571	AWX7598	AWX7598	AWX7598	
		└ FAN DRIVER ASSY	Not used	AWX7599	AWX7599	AWX7599	No. 1
	NSP	FRONT ASSY	AWK7594	AWK7606	AWK7606	AWK7606	
P5- 7		├ COMPOSITE ASSY	AWX7581	AWX7621	AWX7621	AWX7621	
P6- 3		├ V-AMP ASSY	AWX7578	AWX7723	AWX7723	AWX7723	
P7- 1		├ DISPLAY ASSY	AWX7574	AWX7601	AWX7601	AWX7601	
		└ P- SW ASSY	Not used	AWX7593	AWX7593	AWX7593	No. 2
		PACKING SECTION					
P3- 2		FM Antenna	ADH7004	ADH7005	ADH7005	ADH7005	
P3- 3		Operating Instructions (English)	ARB7222	ARB7225	ARB7225	ARB7225	
P3- 3		Operating Instructions (German)	Not used	ARC7293	Not used	ARC7293	
P3- 3		Operating Instructions (French)	Not used	ARC7292	Not used	ARC7292	
P3- 3		Operating Instructions (Italian)	Not used	ARC7294	Not used	ARC7294	
P3- 3		Operating Instructions (Dutch)	Not used	ARC7296	Not used	ARC7296	
P3- 3		Operating Instructions (Swedish)	Not used	ARC7298	Not used	ARC7298	
P3- 3		Operating Instructions (Spanish)	Not used	ARC7295	Not used	ARC7295	
P3- 3		Operating Instructions (Portuguese)	Not used	ARC7297	Not used	ARC7297	

Ref. No.	Mark	Symbol and Description	Part No. VSX-35TX /KUXJI/CA	VSX-859RDS /HYXJI	VSX-859RDS /HVXJI	VSX-859RDS-G /HYXJI	Remarks
		PACKING SECTION					
P3- 4		Remote Control Unit	AXD7266	AXD7273	AXD7273	AXD7273	
P3- 8		Packing Case	AHD7860	AHD7865	AHD7865	AHD7900	
P3-11	NSP	Warranty Card	ARY7007	ARY7022	ARY7022	ARY7022	
		Spacer	Not used	AHB7052	AHB7052	AHB7052	No. 3
		EXTERIOR SECTION					
P5-18	⚠	Power Transformer	ATS7284	ATS7285	ATS7285	ATS7285	
P5-19	⚠	Fuse (FU4, FU5:)	REK1112 (2.5A)	REK1025 (T2.0A)	REK1025 (T2.0A)	REK1025 (T2.0A)	
P5-21	⚠	Fuse (FU1:)	VEK1029 (10A)	REK-106 (T4.0A)	AEK-106 (T4.0A)	AEK-106 (T4.0A)	
P5-26		AC Cord Stopper	CM–22C	CM–22B	CM–22B	CM–22B	
P5-27	⚠	AC Power Cord	VDG1075	VDG1080	VDG1076	VDG1080	
P5-28		Spacer	AEB7210	AEB7213	AEB7213	AEB7213	
P5-30	NSP	Under Base	ANA7113	ANA7102	ANA7102	ANA7102	
P5-31		Rear Panel	ANC7910	ANC7912	ANC7939	ANC7961	
P5-33		Bonnet	AZN7835	AZN7835	AZN7835	AZN7836	
P5-35		Trans Shield	ANG7293	ANG7294	ANG7294	ANG7294	
		Bottom Plate	Not used	ANF7020	ANF7020	ANF7020	No. 4
	⚠	Fan Motor	Not used	AXM7012	AXM7012	AXM7012	No. 5
		Stabilizer	Not used	ANG7310	ANG7310	ANG7310	No. 6
		Locking Card Spacer	Not used	AEC7160	AEC7160	AEC7160	No. 7
		HEAT SINK SECTION					
	⚠	Thermistor	Not used	AEX7004	AEX7004	AEX7004	No. 8
		FRONT PANEL SECTION					
P7- 9		4P Flexible Cable/60V	ADD7238	Not used	Not used	Not used	
P7-13		Door Stay	AAH7063	AAH7063	AAH7063	AAH7064	
P7-14		Door	AMB7692	ANB7223	ANB7223	ANB7222	
P7-15		Door Hinge L	AMR7291	AMR7291	AMR7291	AMR7292	
P7-16		Door Hinge R	AMR7293	AMR7293	AMR7293	AMR7294	
P7-17		Volume Knob (MASTER)	AAB7193	AAB7193	AAB7193	AAB7210	
P7-18		Rotary Knob (INPUT SELECTOR)	AAB7226	AAB7226	AAB7226	AAB7227	
P7-19		Digital Cap	AAD7576	AAD7576	AAD7576	AAD7580	
P7-20		Volume Ring	AAK7623	AAH7623	AAH7623	AAH7016	
P7-21		Window	AAK7769	AAK7764	AAK7764	AAK7732	
P7-22		Door Sheet	AAK7783	AAK7778	AAK7778	AAH7798	
P7-24		Cusion Circle	AED7044	AED7044	AED7044	AED7045	
P7-25		Front Panel	AMB7691	ANB7230	ANB7230	ANB7243	
P7-26		Panel Base	AMB7695	AMB7695	AMB7695	AMB7696	
P7-30		Damper Assy	AXA7089	AXA7088	AXA7088	AXA7088	
P7-31		Name Plate	PAM1776	PAN1376	PAN1376	PAN1377	
		POWER Button	Not used	AAD7442	AAD7442	AAD7491	No. 9
		FL Sheet	Not used	Not used	Not used	AAK7735	No.10

Notes : ●The numbers in the remarks column correspond to the numbers on the " EXPLODED VIEWS ".
● For PCB ASSEMBLIES, Refer to "CONTRAST OF PCB ASSEMBLIES", "2. PCB CONNECTION DIAGRAM" and "3. SCHEMATIC DIAGRAM".

■ EXPLODED VIEWS

● PACKING SECTIONS

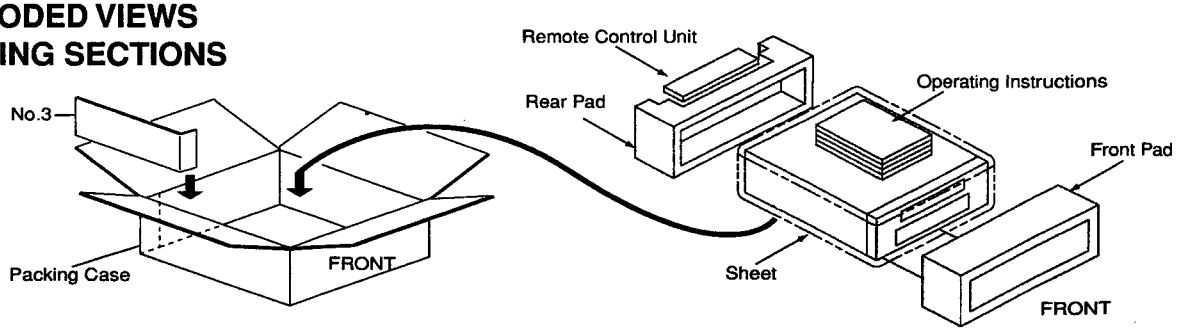

http://www.manualscenter.com

VSX-859RDS, VSX-859RDS-G

• EXTERIOR SECTION

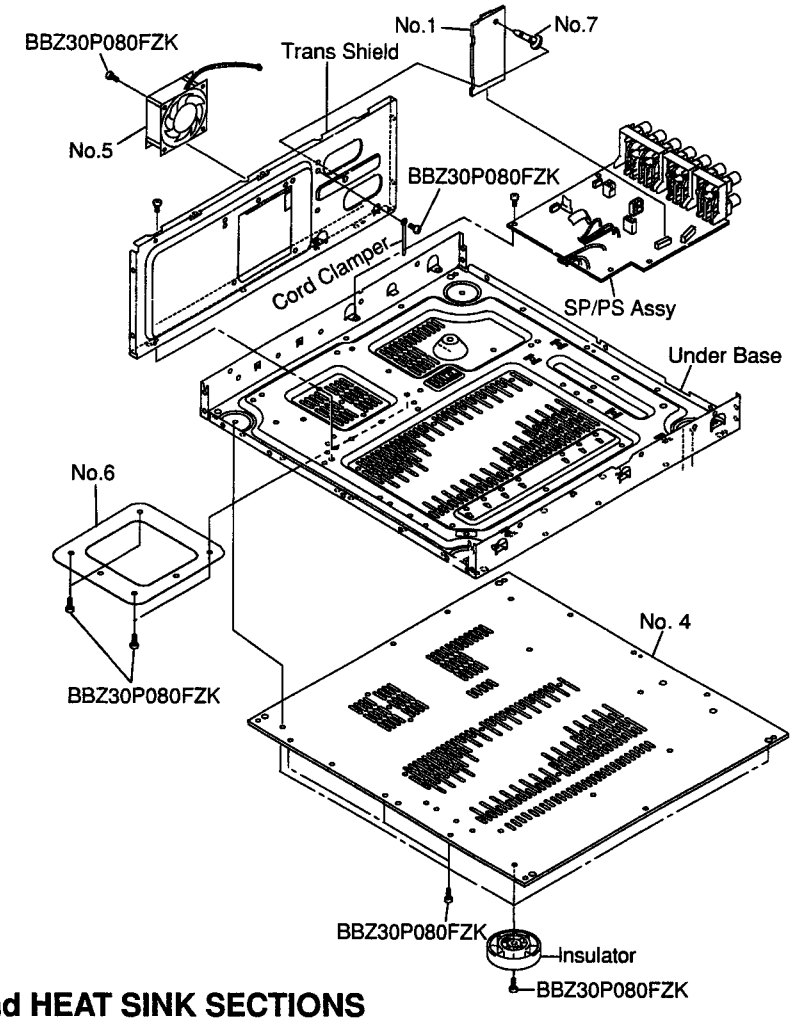

• FRONT PANEL and HEAT SINK SECTIONS

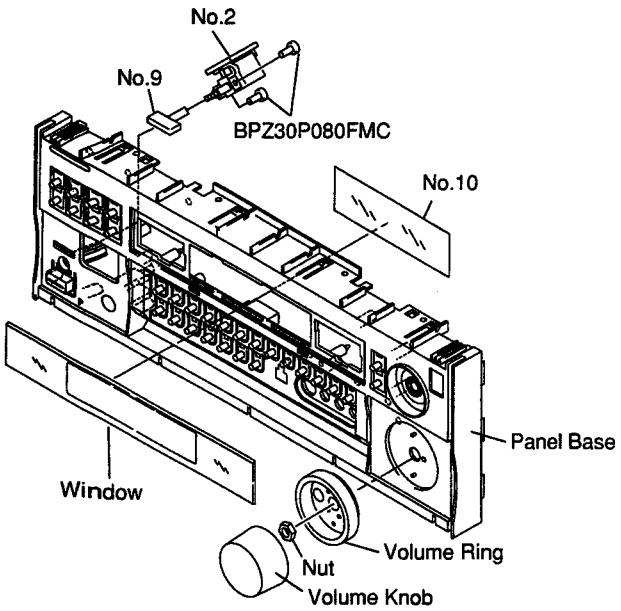

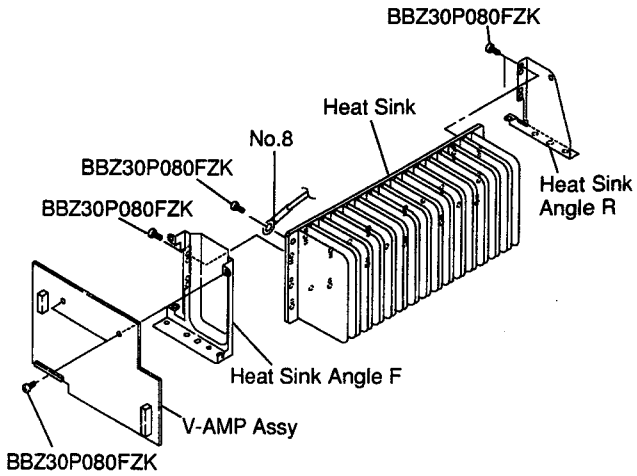

■ CONTRAST OF PCB ASSEMBLIES

AF FM/AM TUNER UNIT

AXQ7232 and AXQ7231 are constructed the same except for the following :

Mark	Symbol and Description	Part No.		Remarks
		AXQ7231	AXQ7232	
	BN201	AKA7003	AKA7002	
	Q601	Not used	2SC2412K	
	Q602	Not used	DTC124EK	
	D101	Not used	UDZS6.8B	
	D601	Not used	HVU187	
	L601	Not used	LCTA270J2520	
	L602	Not used	LAU2R2J	
	F601	Not used	ATF7025	
	C101	CKSRYB103K50	Not used	
	C103, C104, C609	Not used	CKSRYB102K50	
	C206	CCSRCH100D50	CCSRCH120J50	
	C209	CKSRYB223K50	Not used	
	C210	CEJA470M16	CEJQ470M16	
	C211	CEJA1R0M50	CEJQ1R0M50	
	C215	CKSRYB681K50	CKSRYB471K50	
	C216, C217	CKSRYB153K50	CKSRYB103K50	
	C244, C611	Not used	CKSRYB223K50	
	C601, C602	CKSRYB103K50	Not used	
	C603	CKSRYB223K50	CKSRYB392K50	
	C604, C610, C615	Not used	CKSRYB103K50	
	C605	Not used	CCSQCH680J50	
	C606	Not used	CKSRYB561K50	
	C607, C608	Not used	CKSRYB182K50	
	C614	Not used	CCSRCH101J50	
	R101	Not used	RS1/16S0R0J	
	R102, R225, R243	RS1/16S0R0J	Not used	
	R103	RS1/10S331J	RS1/10S221J	
	R104	RS1/10S391J	RS1/10S221J	
	R105, R605	Not used	RS1/16S222J	
	R201	RS1/16S391J	Not used	
	R202	RS1/16S221J	RS1/16S101J	
	R212	RS1/16S392J	RS1/16S512J	
	R216	RS1/16S123J	RS1/16S103J	
	R218, R219	RS1/16S102J	RS1/16S681J	
	R222	RS1/16S472J	RS1/16S103J	
	R227	RS1/16S103J	RS1/16S183J	
	R601	Not used	RS1/16S561J	
	R602, R604	Not used	RS1/16S221J	
	R603	Not used	RS1/16S472J	
	R606	Not used	RS1/16S121J	
	R607	Not used	RS1/16S473J	
	0001 FM FRONT END	AXF7003	AXF7005	
	0002 MW RF TUNING BLOCK	AXX7071	AXX7072	

BF 7.1CH I/O ASSY

AWX7597 and AWX7568 are constructed the same except for the following :

Mark	Symbol and Description	Part No.		Remarks
		AWX7568	AWX7597	
	C1101– C1124, C1161– C1165	Not used	CCSQCH101J50	
	C1167, C1168	Not used	CCSQCH101J50	
	C1151– C1158	Not used	CCSQCH331J50	
	C1166	Not used	CCSQCH471J50	

CF INPUT ASSY

AWX7600 and AWX7573 are constructed the same except for the following :

Mark	Symbol and Description	Part No.		Remarks
		AWX7573	AWX7600	
	Q1001, Q1002	2SC2878	Not used	
	D1051	1SS133	Not used	
	C1051	CGCYX103M16	Not used	
	C1001–C10012	Not used	CCCSL221J50	
	R1013– R1016, R1051	RD1/4PU102J	Not used	
	R1017, R1018	RD1/4PU473J	Not used	
	CN1002 6P SOCKET	KP200TA6L	Not used	
	JA1004 2P PIN JACK	AKB7046	Not used	
	JA1051 MULI ROOM JACK	AKN7014	Not used	

EF A-CONNECTION ASSY

AWX7584 and AWX7566 are constructed the same except for the following :

Mark	Symbol and Description	Part No.		Remarks
		AWX7566	AWX7584	
	IC503	NJM4558MD	UPC4570G2	
	IC1551	M62429FP	Not used	
	D1551	UDZS5.1B	Not used	
	C1509, C1510	Not used	CCSQCH221J50	
	C1551– C1553	CEAT100M50	Not used	
	C1554, C1555	CCSQCH101J50	Not used	
	C1556, C1557	CEAT1R0M50	Not used	
	R1551	RS3LMF391J	Not used	
	R1552, R1553	RS1/10S102J	Not used	
	R1554, R1555	RS1/10S103J	Not used	
	CN1552 9P SOCKET	AKP7068	Not used	
	CN1554 6P PLUG	KM200TA6	Not used	

F COMPOSITE ASSY

AWX7621 and AWX7581 are constructed the same except for the following :

Mark	Symbol and Description	Part No.		Remarks
		AWX7581	AWX7621	
	IC731	NJM2279M	Not used	
	D731	DAN202K	Not used	
	C732, C733	CKSQYB473K50	Not used	
	C734, C735	CEAT101M10	Not used	
	C736	CKSQYB473K50	Not used	
	C737	CCSQCH470J50	Not used	
	R733– R735	RS1/10S102J	Not used	

IF V-AMP ASSY

AWX7723 and AWX7578 are constructed the same except for the following :

Mark	Symbol and Description	Part No.		Remarks
		AWX7578	AWX7723	
	CN2201 3P PLUG	Not used	KM250MA3	

DF MAIN CONTROL ASSY

AWX7594 and AWX7560 are constructed the same except for the following :

Mark	Symbol and Description	Part No.		Remarks
		AWX7560	AWX7594	
	IC103	TC9164AF	Not used	
	IC104	NJM4558MD	Not used	
	IC251	Not used	NJM4558MD	
	Q905	DTA124EK	Not used	
	D251, D252	Not used	1SS355	
	D253	Not used	UDZS5.1B	
	C101– C112	Not used	CCSQCH221J50	
	C119, C120	Not used	CKSRYB331K50	
	C133, C134	CKSRYB103K50	Not used	
	C135, C136	CEAT1R0M50	Not used	
	C145, C146, C169, C170, C181, C182	Not used	CCSRCH101J50	
	C157, C158	Not used	CCSQCH101J50	
	C191– C193	CCSRCH101J50	Not used	
	C252	Not used	CEAT470M25	
	C253– C256	Not used	CKSRYB103K50	
	C291	CEJA101M16	CEJQ101M16	
	C911	CKSRYB103K50	Not used	
	L101– L104	Not used	LCTA181J3225	
	R111, R112	RS1/10S0R0J	RS1/10S101J	
	R115, R116	RS1/10S331J	RS1/10S122J	
	R129, R130, R139, R140	RS1/10S104J	Not uesd	
	R203, R204	RS1/10S104J	Not used	
	R131, R132	RS1/16S474J	Not used	
	R133, R134	RS1/16S471J	Not used	
	R135, R136, R934, R944– R946	RS1/16S102J	Not used	
	R990, R991	RS1/10S102J	Not used	
	R211– R215, R252, R253	Not used	RS1/16S104J	
	R251	Not used	RS1/16S474J	
	R254	Not used	RS1/16S102J	
	R255	Not used	RS1/16S393J	
	R295	Not used	RS1/10S0R0J	
	R923	Not used	RS1/16S103J	
	R933	RS1/16S473J	Not used	
	CN103 9P PLUG	AKP7057	Not used	
	CN906 4P FFC CONNECTOR	52045-0445	Not used	

LF SP / PS ASSY

AWX7598 and AWX7571 are constructed the same except for the following :

Mark	Symbol and Description	Part No.		Remarks
		AWX7571	AWX7598	
⚠	D3001, D3002	D5SBA20	LN6SB60-4003	
	D3052, D3054, D3056, D3058, D3059	Not used	1SS133	
	D3201	Not used	MTZJ5.1B	
	C3101- C3105	CFTYA104J50	CFTYA224J50	
	C3106- C3110	Not used	CFTYA224J50	
	C3111- C3117	CQHA102J2A	CQHA332J2A	
	C3119	Not used	CKPUYB221K50	
	R3111	Not used	RD1/4PU4R7J	
	R3133, R3134	Not used	RS1LMF471J	
	Heat Sink	ANH1021	Not used	
	CN3002 6P PLUG	Not used	KM200TA6	
	CN3101 8P SPEAKER TERMINAL	AKE7058	AKE7059	
	CN3102 6P SPEAKER TERMINAL	AKE7060	AKE7061	

http://www.manualscenter.com

NF REGULATOR ASSY

AWX7806 and AWX7562 are constructed the same except for the following :

Mark	Symbol and Description	Part No.		Remarks
		AWX7562	AWX7806	
⚠	D5009	D3SBA20(B)	LN4SB60-4003	

QF PRIMARY ASSY

AWX7596, AWX7604 and AWX7563 are constructed the same except for the following:

Mark	Symbol and Description	Part No.			Remarks
		AWX7563	AWX7596	AWX7604	
	C6011– C6013	Not used	CCCSL101K2H	CCCSL101K2H	
	R6001	RCN1080	Not used	Not used	
	T6001	ATT7043	ATT7040	ATT7040	
	J0032	Not used	D20PYY0330E	D20PYY0330E	
	6004	AKP7136	AKP7135	Not used	
	6001	Not used	51048-0300	51048-0300	

SF DISPLAY ASSY

AWX7601 and AWX7574 are constructed the same except for the following :

Mark	Symbol and Description	Part No.		Remarks
		AWX7574	AWX7601	
	IC7051	TC7W53FU	Not used	
	IC7401	Not used	BU1923	
	Q7053	FMA1A	Not used	
	Q7054	DTC124EK	Not used	
	Q7401	Not used	2SA1037K	
	Q7402	Not used	DTC143EK	
	Q7403	Not used	2SC2412K	
	D7054– D7057	1SS355	Not used	
	C7053	CKSQYB153K50	Not used	
	C7401	Not used	CKSQYB472K50	
	C7402	Not used	CEAT2R2M50	
	C7403, C7404	Not used	CKSQYB102K50	
	C7405	Not used	CEAT101M10	
	C7406, C7407	Not used	CCSQCH270J50	
	C7408	Not used	CKSQYB561K50	
	C7409	Not used	CEAT1R0M50	
	L7401	Not used	LFA2R2J	
	R7047	RS1/10S223J	RS1/10S103J	
	R7056	RS1/10S223J	Not used	
	R7057	RS1/10S392J	Not used	
	R7058, R7061	RS1/10S103J	Not used	
	R7401, R7407, R7408	Not used	RS1/10S102J	
	R7403	Not used	RS1/10S222J	
	R7404	Not used	RS1/10S473J	
	R7405	Not used	RS1/10S333J	
	R7406	Not used	RS1/10S104J	
	CN7007 4P FFC CONNECTOR	52045-0445	Not used	
	X7401 CRYSTAL RESONATOR (4.332MHz)	Not used	ASS7004	

YF DSP ASSY

AWX7595 and AWX7651are constructed the same except for the following :

Mark	Symbol and Desacription	Part No.		Remarks
		AWX7561	AWX7595	
	IC9041	Not used	NJM4558MD	
	IC9071	Not used	PM4007A	
	IC9091	Not used	LH52256CN-70LL	
	Q9001, Q9002, Q9004 - Q9006, Q9031	Not used	2SC3082K (NP)	
	Q9003, Q9032	Not used	2PD601A (QR)	
	Q9007	Not used	2PB709A (QR)	
	D9001	Not used	KV1851	
	D9002	Not used	1SS355	
	F9001	Not used	ATF7001	
	L9003	Not used	ATH7001	
	L9001, L9071	Not used	ATL7002	
	L9091	Not used	QTL1013	
	JA9151	AKB7131	Not used	
	JA9152	Not used	AKB7132	
	C9001, C9014, C9054, C9056, C9070	Not used	CKSRYB103K50	
	C9002, C9003, C9006, C9010, C9011, C9017	Not used	CKSRYF104Z25	
	C9018, C9031, C9051, C9052, C9055, C9092	Not used	CKSRYF104Z25	
	C9072–C9075, C9078–C9081	Not used	CKSRYF104Z25	
	C9004, C9005, C9008, C9009, C9012, C9013	Not used	CKSQYF104Z25	
	C9015, C9020, C9032, C9043, C9058	Not used	CKSQYF104Z25	
	C9007	Not used	CCSRCH750J50	
	C9016	Not used	CEJQ470M25	
	C9019	Not used	CKSRYB473K16	
	C9033	Not used	CCSRCH101J50	
	C9041, C9042	Not used	CKSRYF105Z10	
	C9053	Not used	CEJQNP4R7M25	
	C9057	Not used	CCSRCH270J50	
	C9071	Not used	CEJQ101M10	
	C9076, C9077, C9082, C9083, C9084, C9085	Not used	CCSRCH471J50	
	C9093, C9087	Not used	CCSRCH471J50	
	C9086	Not used	CCSQCH471J50	
	C9091	Not used	CEJQ470M16	
	C9095	Not used	CCSQCH221J50	
	C9096	Not used	CEAT100M50	
	C9102, C9108, C9151, C9152, C9162	CEJA470M16	CEJQ101M16	
	C9111	CEJAR47M50	CEJQR47M50	
	C9117, C9120, C9562,	CEJA470M16	CEJQ470M16	
	C9123, C9125	CEJA1R0M50	CEJQ1R0M50	
	C9127	CEJA2R2M50	CEJQ2R2M50	
	C9203– C9207, C9603, C9604, C9615, C9616	CEJA4R7M50	CEJQ4R7M50	
	C9627, C9628, C9761, C9762, C9811, C9813	CEJA4R7M50	CEJQ4R7M50	
	C9501, C9516, C9551, C9740, C9801, C9802	CEJA101M10	CEJQ101M10	
	C9523, C9526, C9643, C9644, C9770	CEJA100M25	CEJQ100M25	
	C9529	CEJA2R2M50	CEJQ2R2M50	
	C9713, C9714, C9727, C9728, C9739, C9753	CEJA330M10	CEJQ330M10	
	C9754, C9765– C9769	CEJA330M10	CEJQ330M10	
	C9803, C9805	CEJA470M25	CEJQ470M25	
	C9812, C9814	CEJA101M10	CEJQ101M10	
	R9001	Not used	RS1/16S750J	
	R9002, R9010, R9011, R9018, R9038, R9054	Not used	RS1/16S103J	
	R9071, R9072, R9053	Not used	RS1/16S103J	
	R9003, R9019	Not used	RS1/16S512J	
	R9004, R9015, R9016, R9020	Not used	RS1/16S202J	
	R9005, R9006, R9014, R9021, R9022, R9025	Not used	RS1/16S102J	
	R9073	Not used	RS1/16S102J	
	R9007, R9023, R9033	Not used	RS1/16S220J	
	R9008, R9027, R9030	Not used	RS1/16S302J	
	R9009,R9074	Not used	RS1/16S221J	
	R9013, R9017, R9034	Not used	RS1/16S152J	
	R9024, R9026	Not used	RS1/16S332J	
	R9028, R9029	Not used	RS1/16S561J	
	R9031, R9032	Not used	RS1/16S333J	
	R9035	Not used	RS1/16S223J	

http://www.manualscenter.com

Mark	Symbol and Description	Part No. AWX7561	Part No. AWX7595	Remarks
	R9037, R9039	Not used	RS1/16S274J	
	R9041	Not used	RS1/16S472J	
	R9042, R9044, R9062	Not used	RS1/16S392J	
	R9043	Not used	RS1/16S273J	
	R9046	Not used	RS1/16S104J	
	R9047	Not used	RS1/16S432J	
	R9051	Not used	RS1/16S393J	
	R9052	Not used	RS1/16S243J	
	R9055	Not used	RS1/16S121J	
	R9056	Not used	RS1/16S683J	
	R9057– R9059	Not used	RS1/16S473J	
	R9061	Not used	RS1/16S471J	
	R9075, R9076	Not used	RS1/16S101J	
	R9095, R9096	Not used	RS1/16S0R0J	
	R9106	RS1/16S331J	RS1/16S101J	
	R9153	RS1/10S0R0J	RS1/10S104J	
	R9590	RS1/16S0R0J	RS1/16S331J	
	R9761	RS1/16S102J	Not used	
	X9001 CRYSTAL RESONATOR (18.432MHz)	Not used	ASS7009	

■ PCB PARTS LIST

Mark	No.	Description	Part No.
QA		**P-SW ASSY (AWX7593)**	
		SWITCHES AND RELAYS	
	S6801		ASG1035
		CAPACITORS	
	C6801, C6802		CGCYX103K25
		OTHERS	
	CN6801	3P JUMPER CONNECTOR	52151-0310
Z		**FAN DRIVER ASSY (AWX7599)**	
		SEMICONDUCTORS	
⚠	IC3501		AEK7010
	Q3501		KRA103M
	Q3502		KRC103M
	Q3503		2SC4793
	D3504		MTZJ12C
	D3503		MTZJ27D
⚠	D3501, D3502		S5688G
		CAPACITORS	
	C3501		CEAT471M35
	C3502		CEAT1R0M50
	C3503		CKCYF103Z50
	C3504		CEANP471M25
	C3505		CEAT100M50
		RESISTORS	
	Other Resistors		RD1/4PU□□□J
		OTHERS	
	CN3502	3P PLUG	KM250MA3L
	CN3501	6P SOCKET	KP200TA6L

2. PCB CONNECTION DIAGRAM

2.1 P- SW and FAN DRIVER ASSYS

QA P-SW ASSY

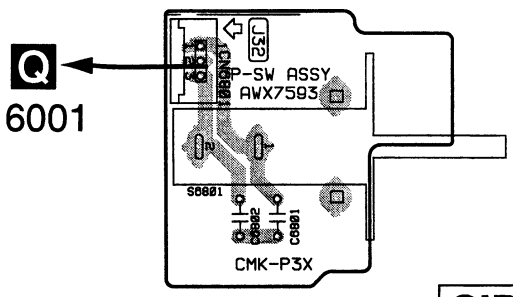

(ANP7362-A)

Z FAN DRIVER ASSY

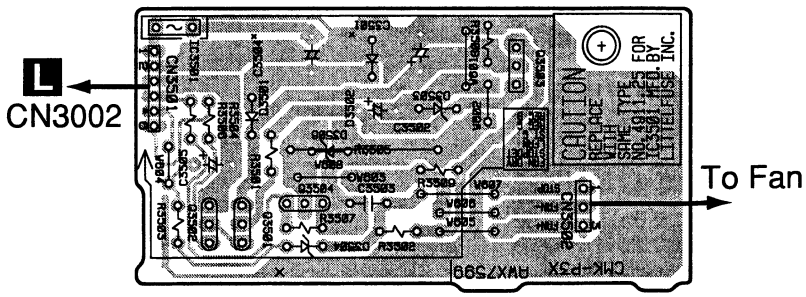

IC3501 Q3502 Q3501 Q3504 Q3503

(ANP7361-A)

SIDE A

http://www.manualscenter.com

2.2 TRANS 2-1, TRANS 2-2 and TRANS 1 ASSYS

● Line Voltage Selection

Line Voltage can be changed by the following modification:

1. Disconnect the AC power cord.
2. Remove the cover.
3. Change the connection wire from TRANS 1 ASSY (Terminal No. Y6002) to AMP ASSY (Terminal No. Y6002) as follows.

Voltage	Terminal No. of TRANS 1 ASSY
220-230V	Y6002/HY/HL/HV
240V	Y6002/J,/KU

4. Stick a line voltage label on the rear panel.

Description	Part No.
220V label	AAX-193
240V label	AAX-192

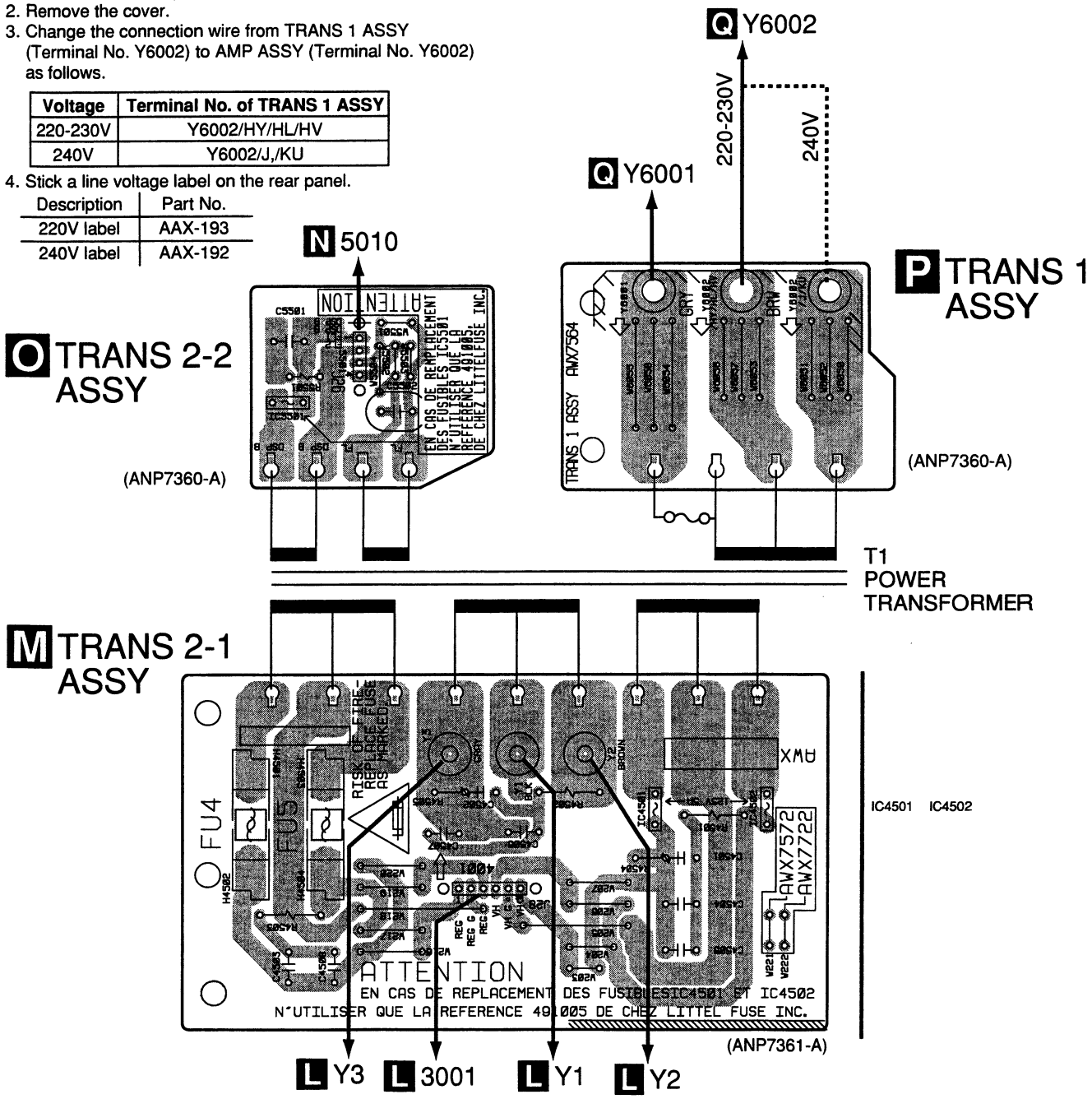

3. SCHEMATIC DIAGRAM

http://www.manualscenter.com

3.1 FM/AM TUNER UNIT

AF FM/AM TUNER UNIT (AXQ7232)

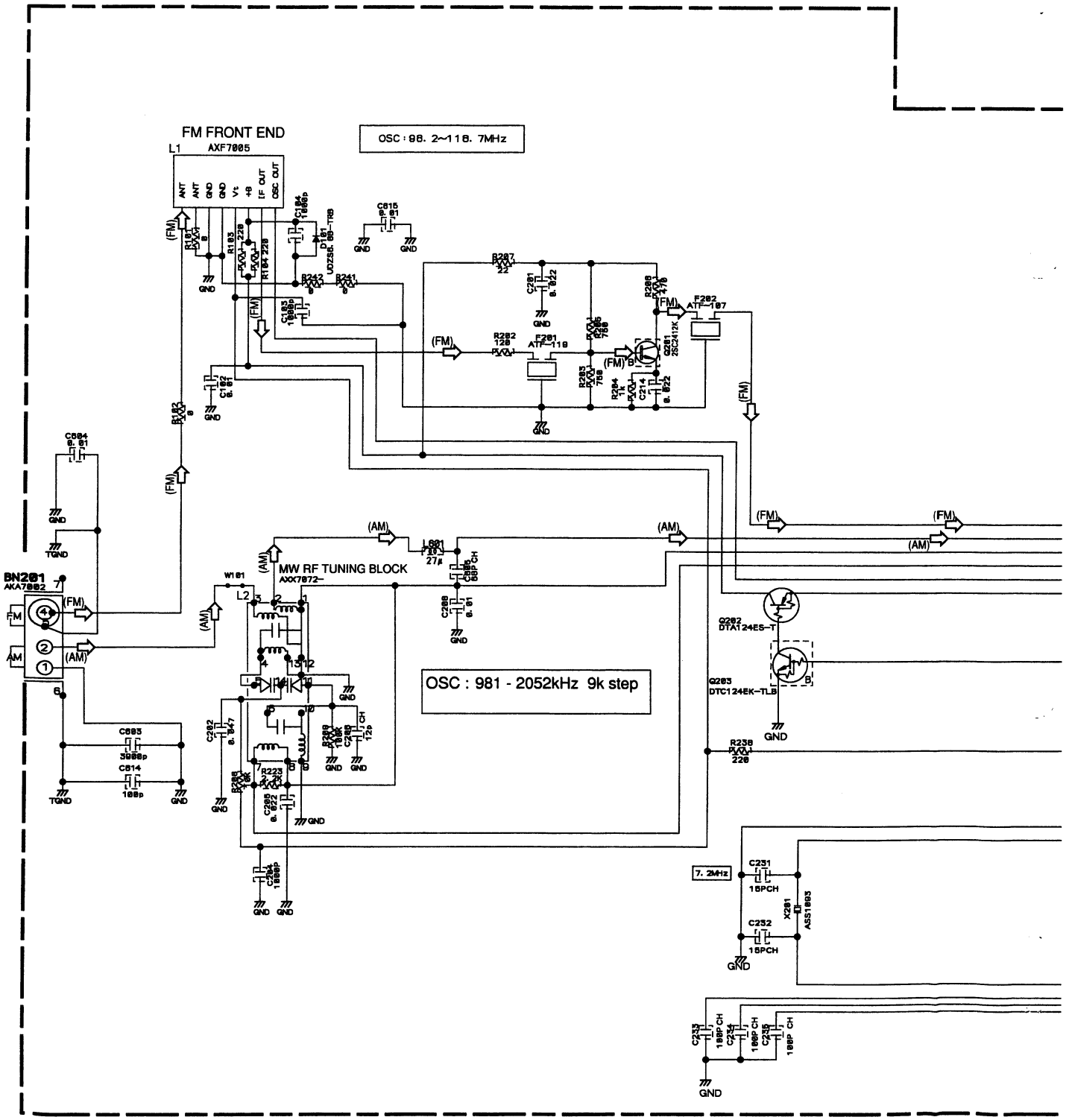

http://www.manualscenter.com

Notes

1. RESISTORS
   Indicated in Ω, 1/16W±5% Tolerance unless otherwise noted K:KΩ, M:MΩ.
2. CAPACITORS
   Indicated in Capacity (μF)/VOLTAGE (V) unless otherwise noted P:PF.
3. DIODES
   No mark diode is 1SS133.

: The power supply is shown with the marked box.

(TX) : AUDIO SIGNAL ROUTE (TUNER)
(AM) : AM SIGNAL ROUTE
(FM) : FM SIGNAL ROUTE

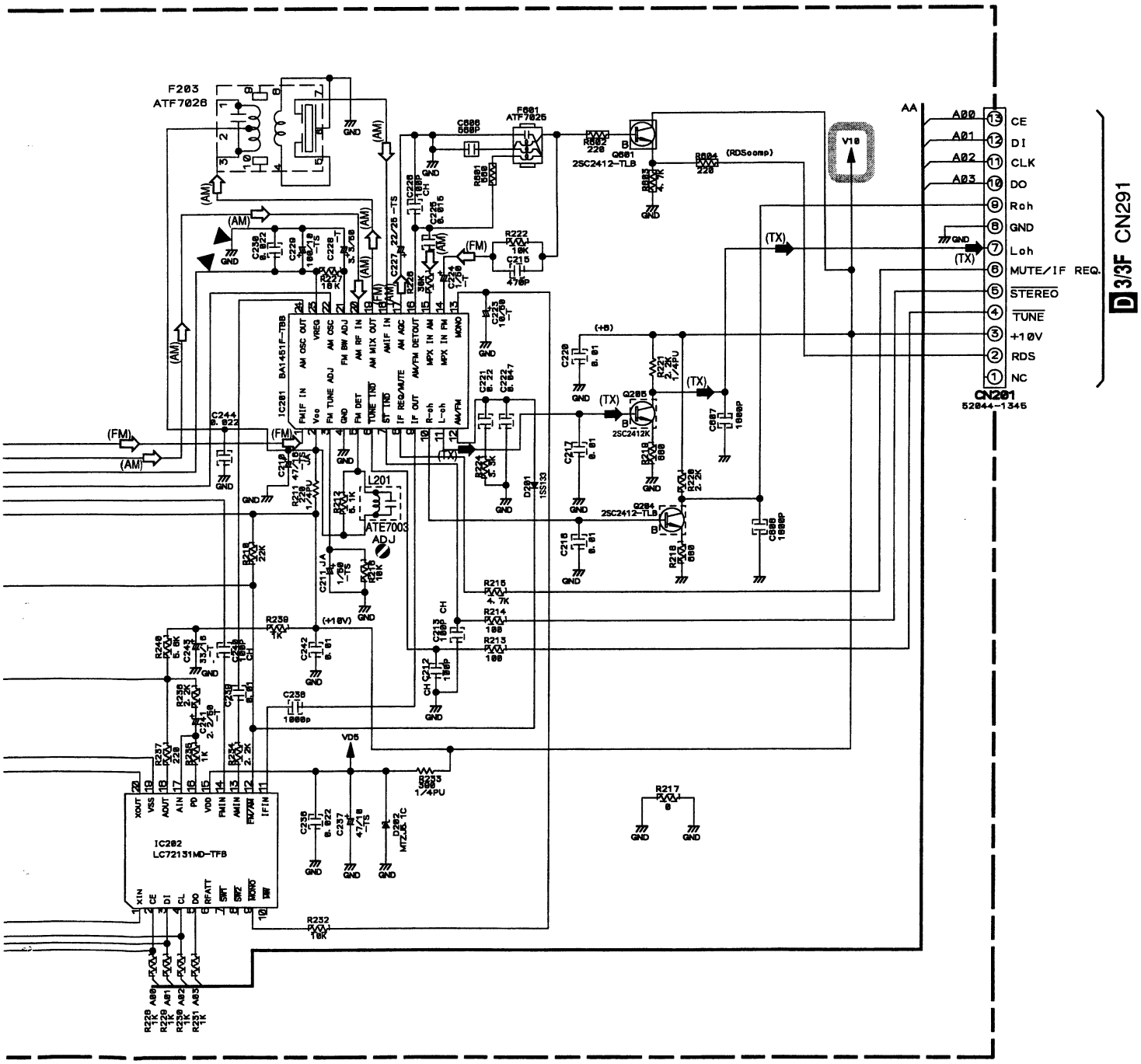

http://www.manualscenter.com

3.2 7.1CH I/O and INPUT ASSYS

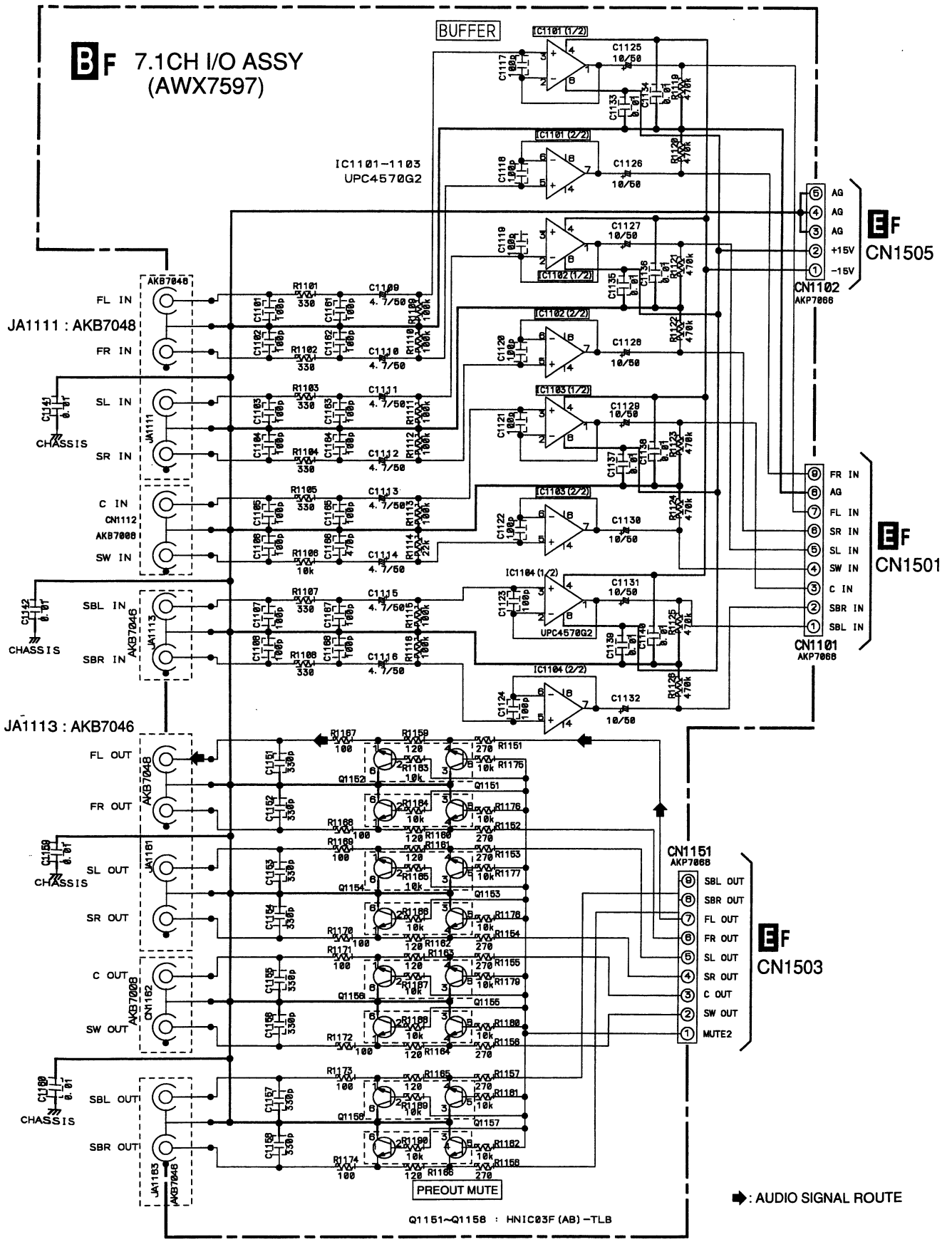

http://www.manualscenter.com

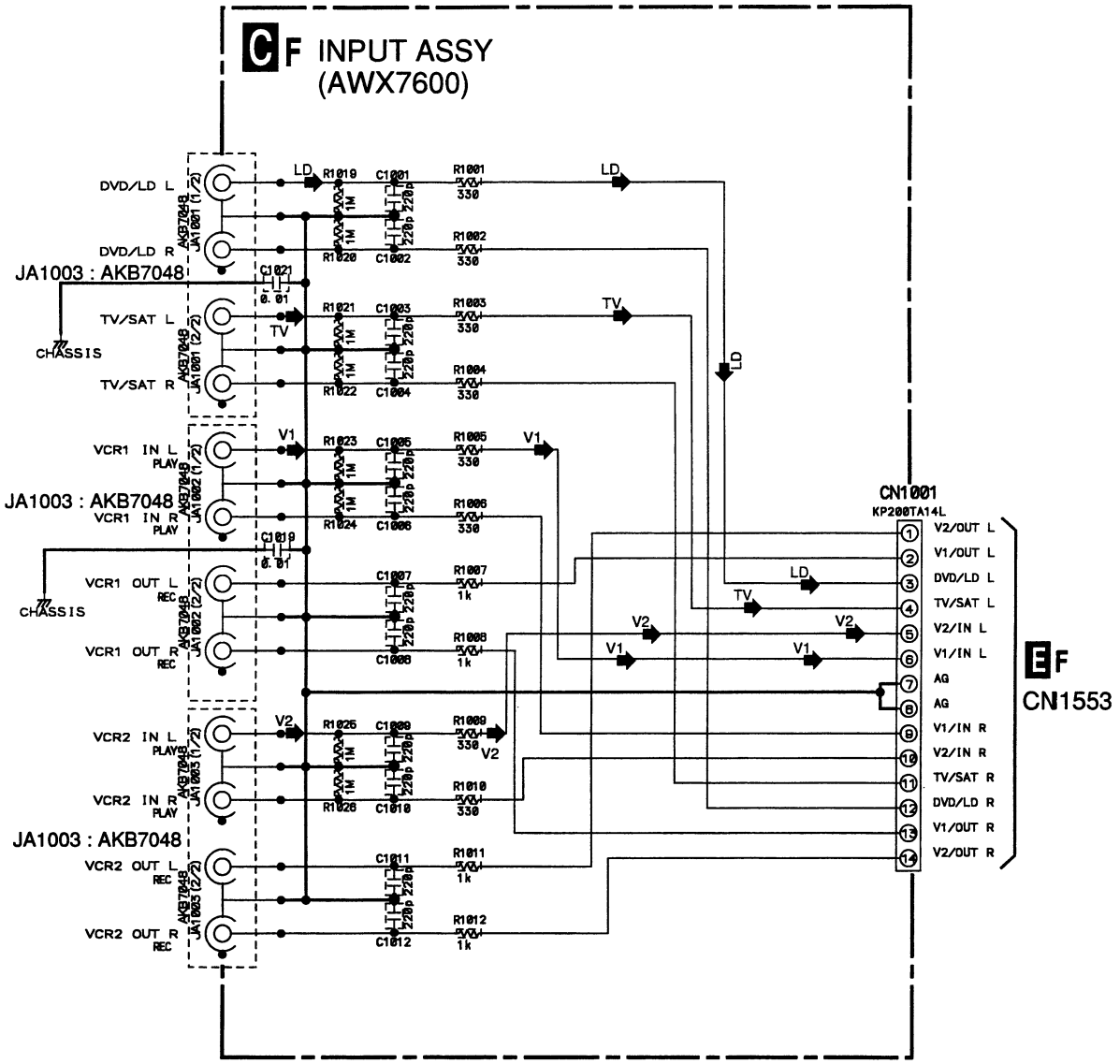

➡: AUDIO SIGNAL ROUTE
LD➡: AUDIO SIGNAL ROUTE (LD)
TV➡: AUDIO SIGNAL ROUTE (TV)
V1➡: AUDIO SIGNAL ROUTE (VCR1)
V2➡: AUDIO SIGNAL ROUTE (VCR2)
MR➡: AUDIO SIGNAL ROUTE (MR)

http://www.manualscenter.com

3.3 MAIN CONTROL ASSY (1/3)

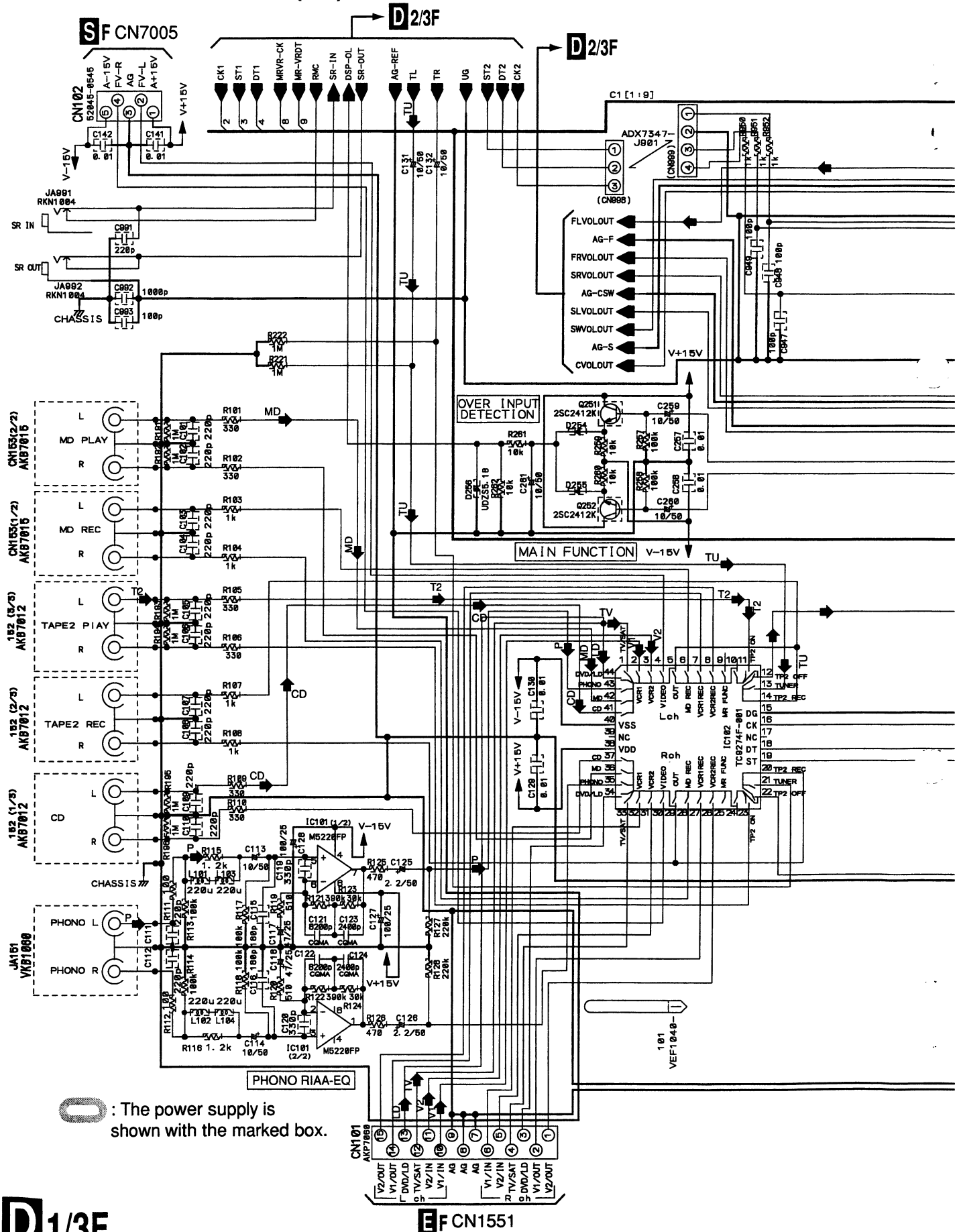

: The power supply is shown with the marked box.

http://www.manualscenter.com

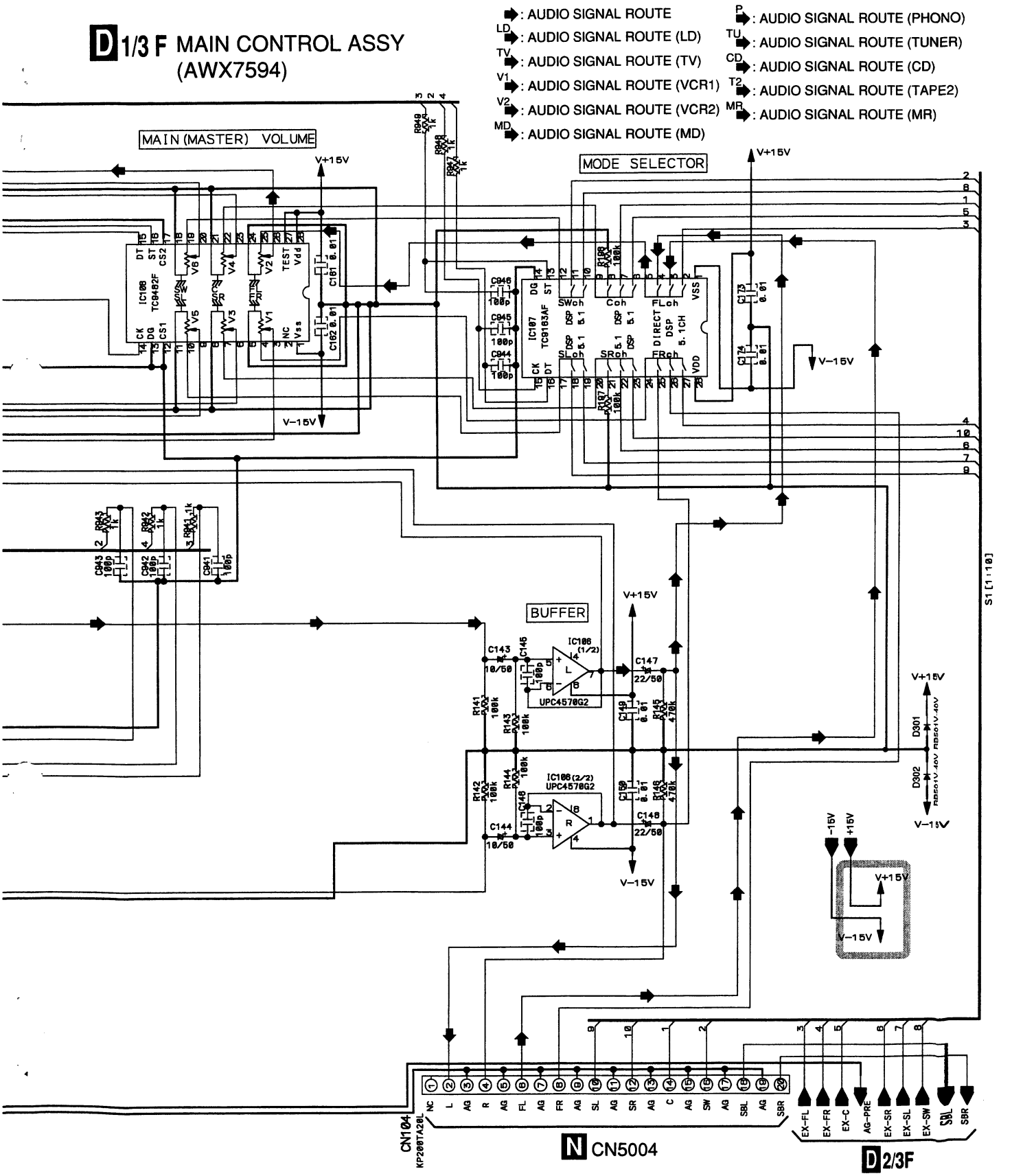

http://www.manualscenter.com

3.4 MAIN CONTROL ASSY (2/3)

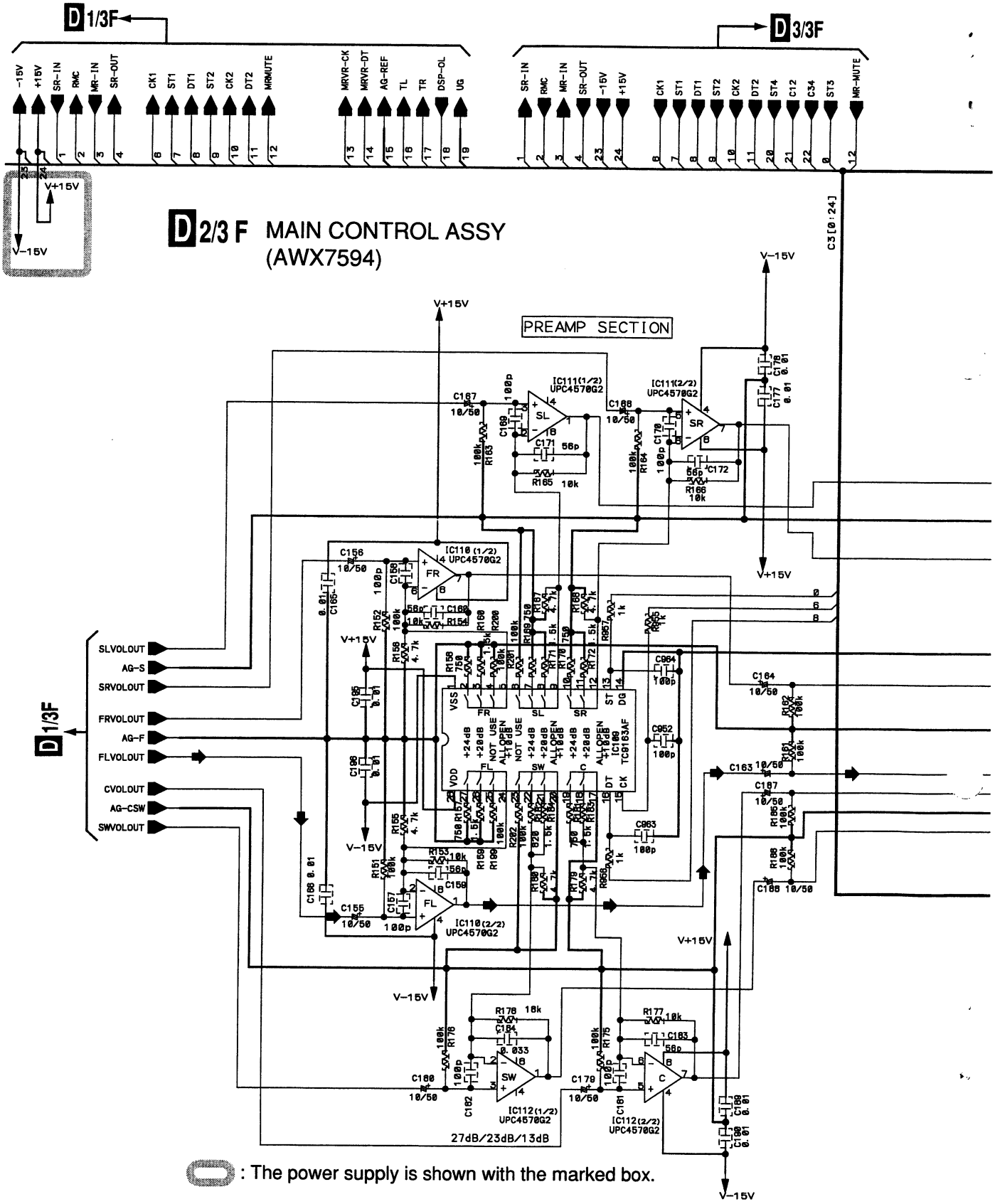

: The power supply is shown with the marked box.

http://www.manualscenter.com

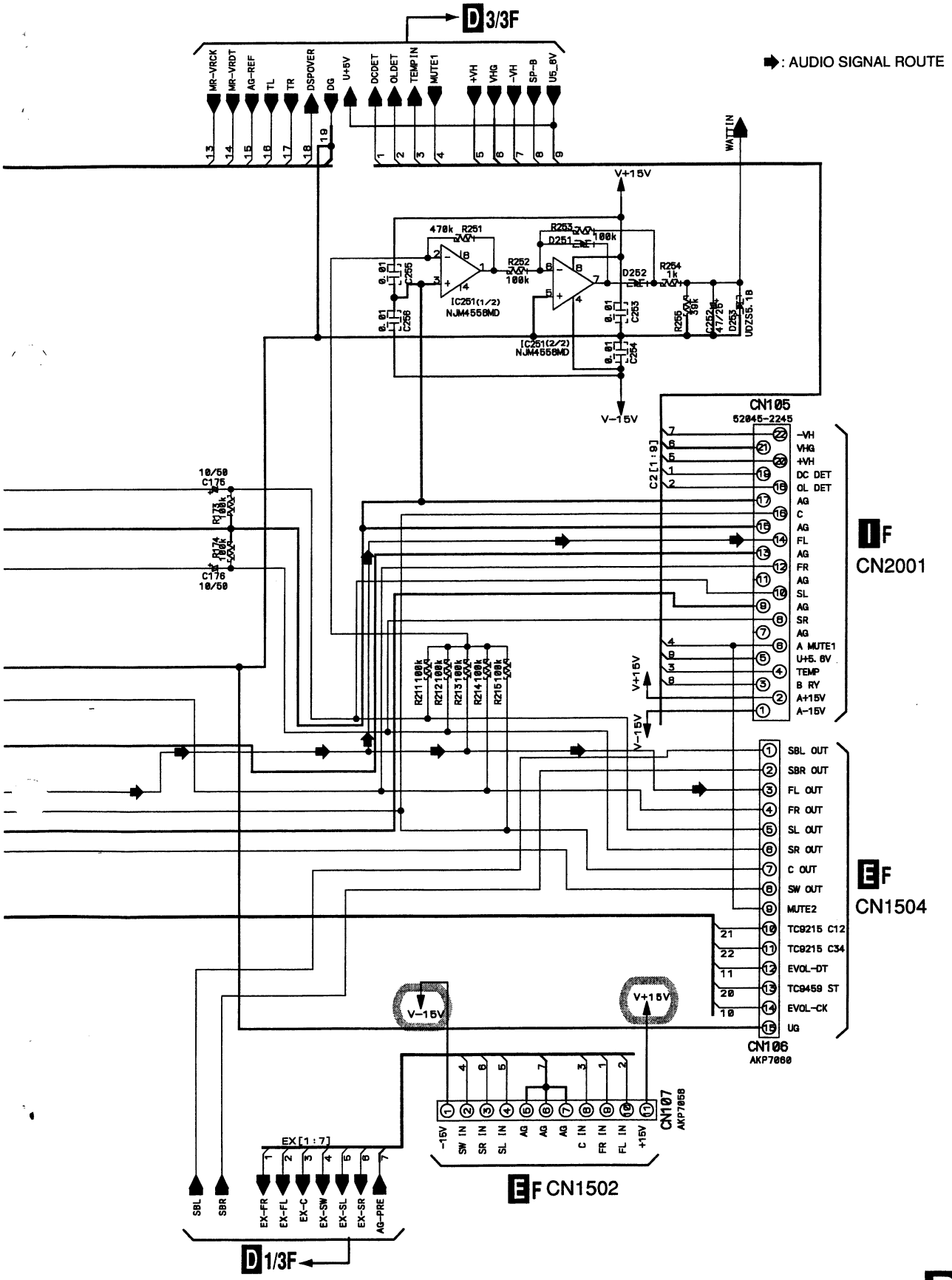

http://www.manualscenter.com

3.5 MAIN CONTROL ASSY (3/3)

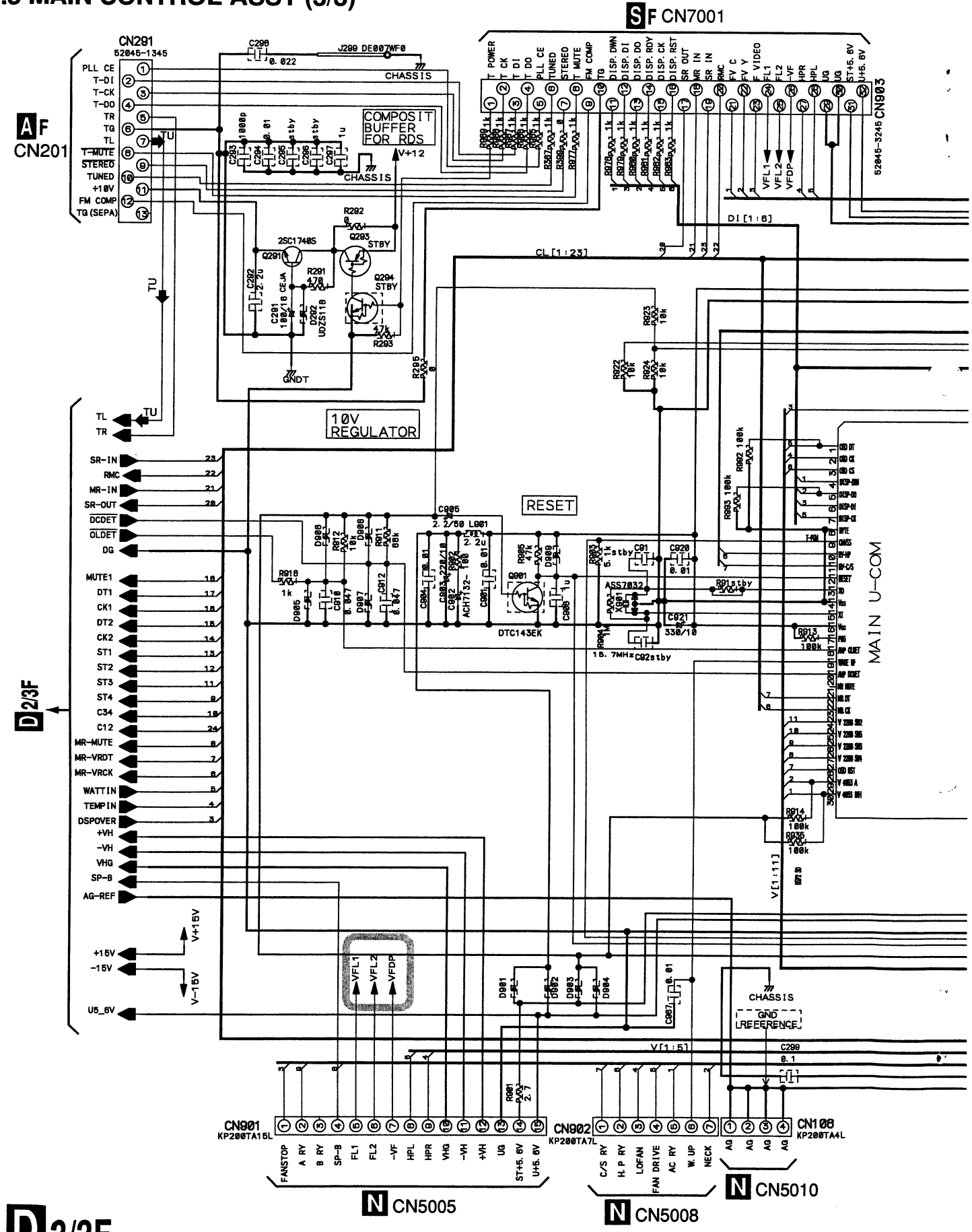

http://www.manualscenter.com

D 3/3 F MAIN CONTROL ASSY (AWX7594)

TU ➡: AUDIO SIGNAL ROUTE (TUNER)

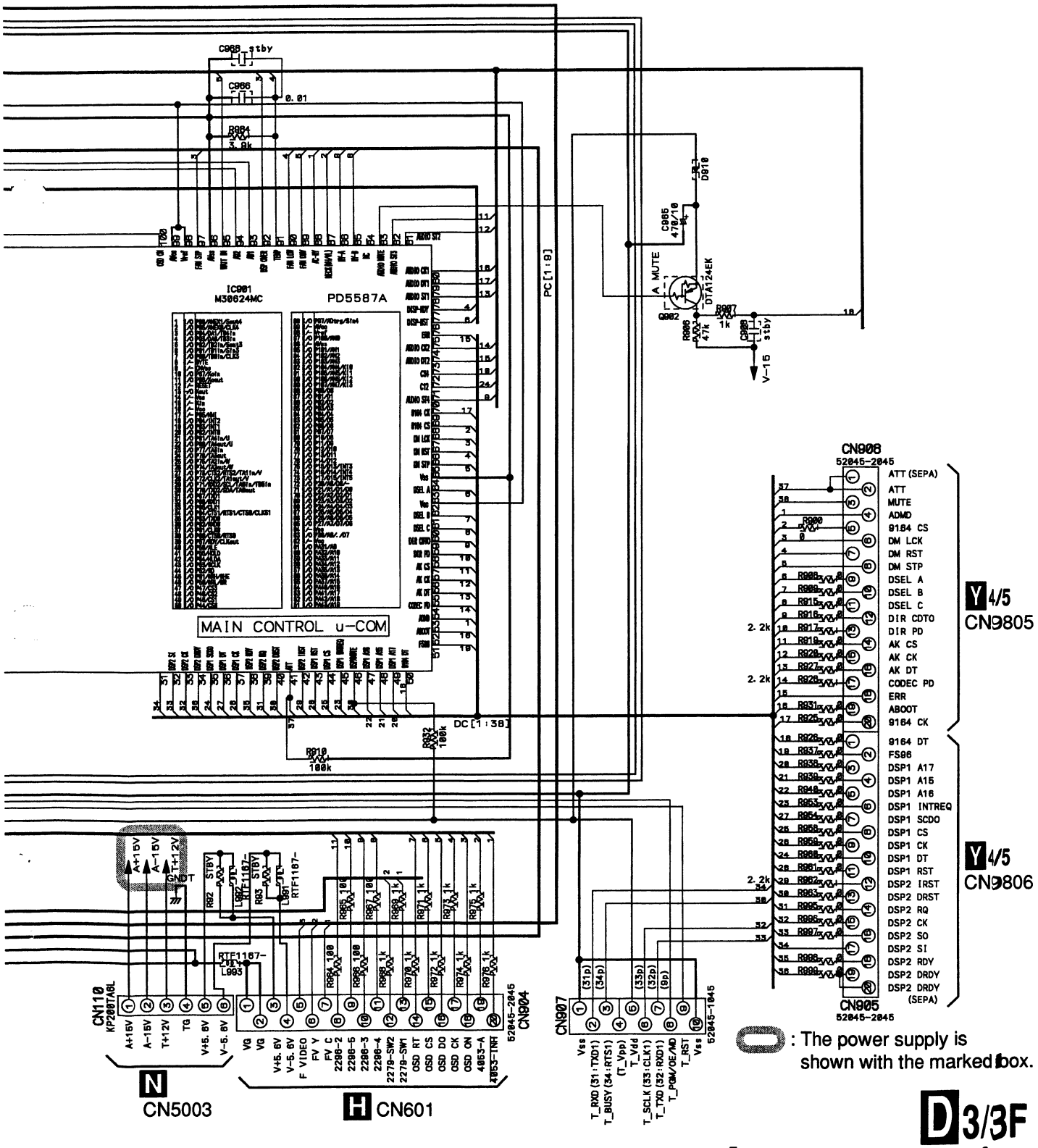

: The power supply is shown with the marked box.

http://www.manualscenter.com

3.6 A-CONNECTION and V-AMP ASSYS

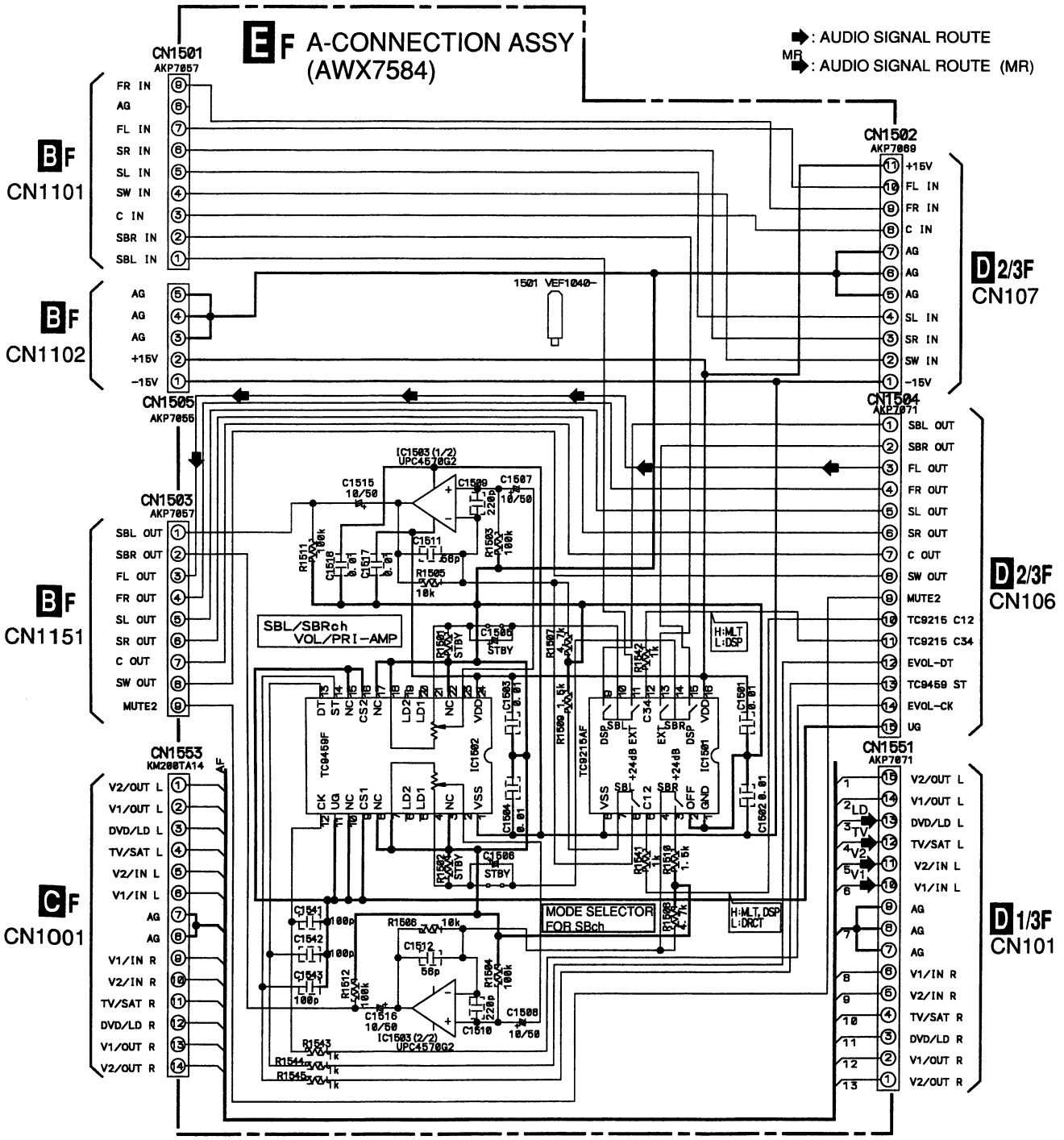

http://www.manualscenter.com

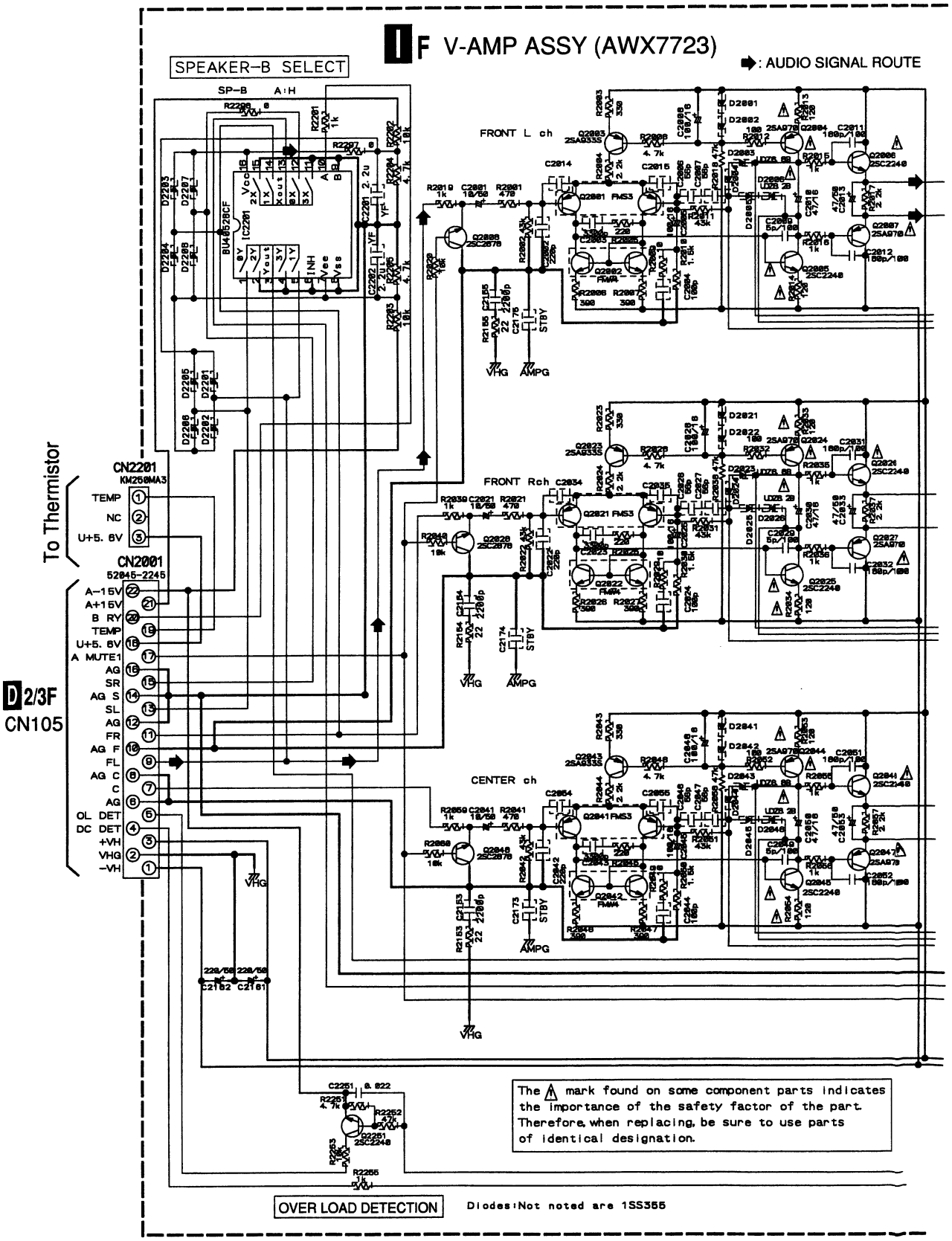

http://www.manualscenter.com

3.7 TRANS 2-1, FAN DRIVER and SP/PS ASSYS

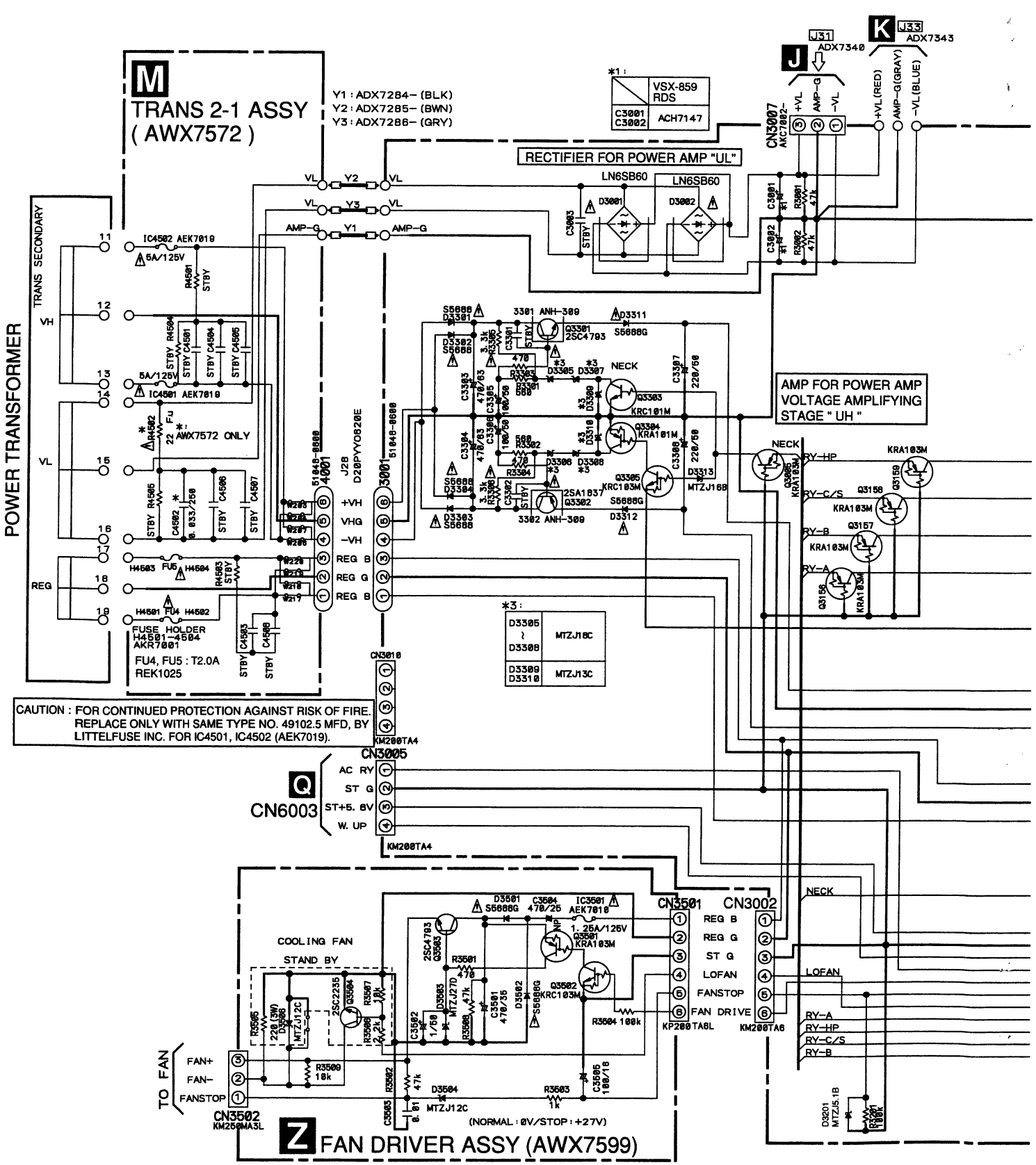

http://www.manualscenter.com

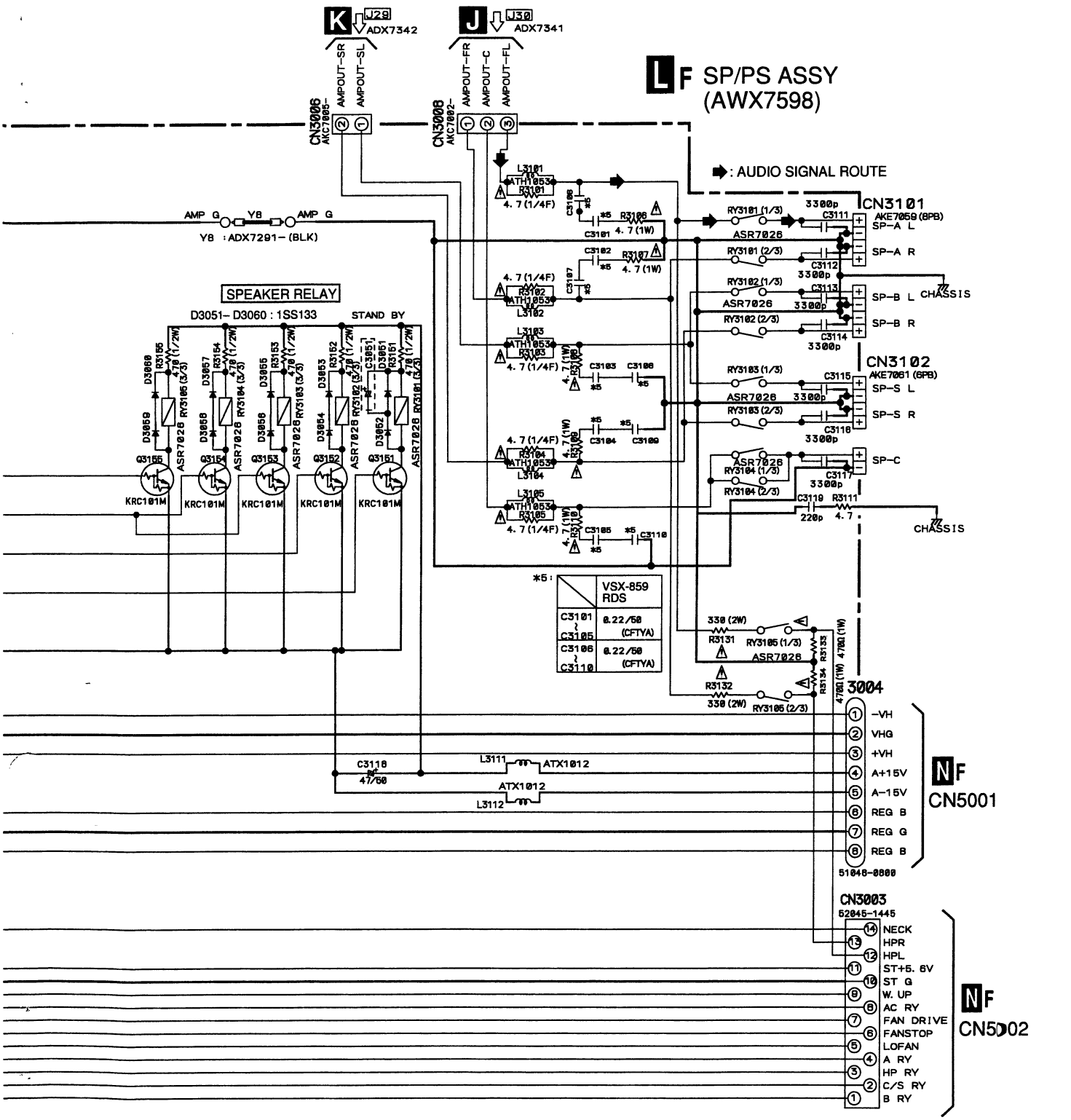

• NOTE FOR FUSE REPLACEMENT

CAUTION -FOR CONTINUED PROTECTION AGAINST RISK OF FIRE. REPLACE WITH SAME TYPE AND RATINGS ONLY.

http://www.manualscenter.com

3.7 REGULATOR, TRANS 1 and TRANS 2-2 ASSYS

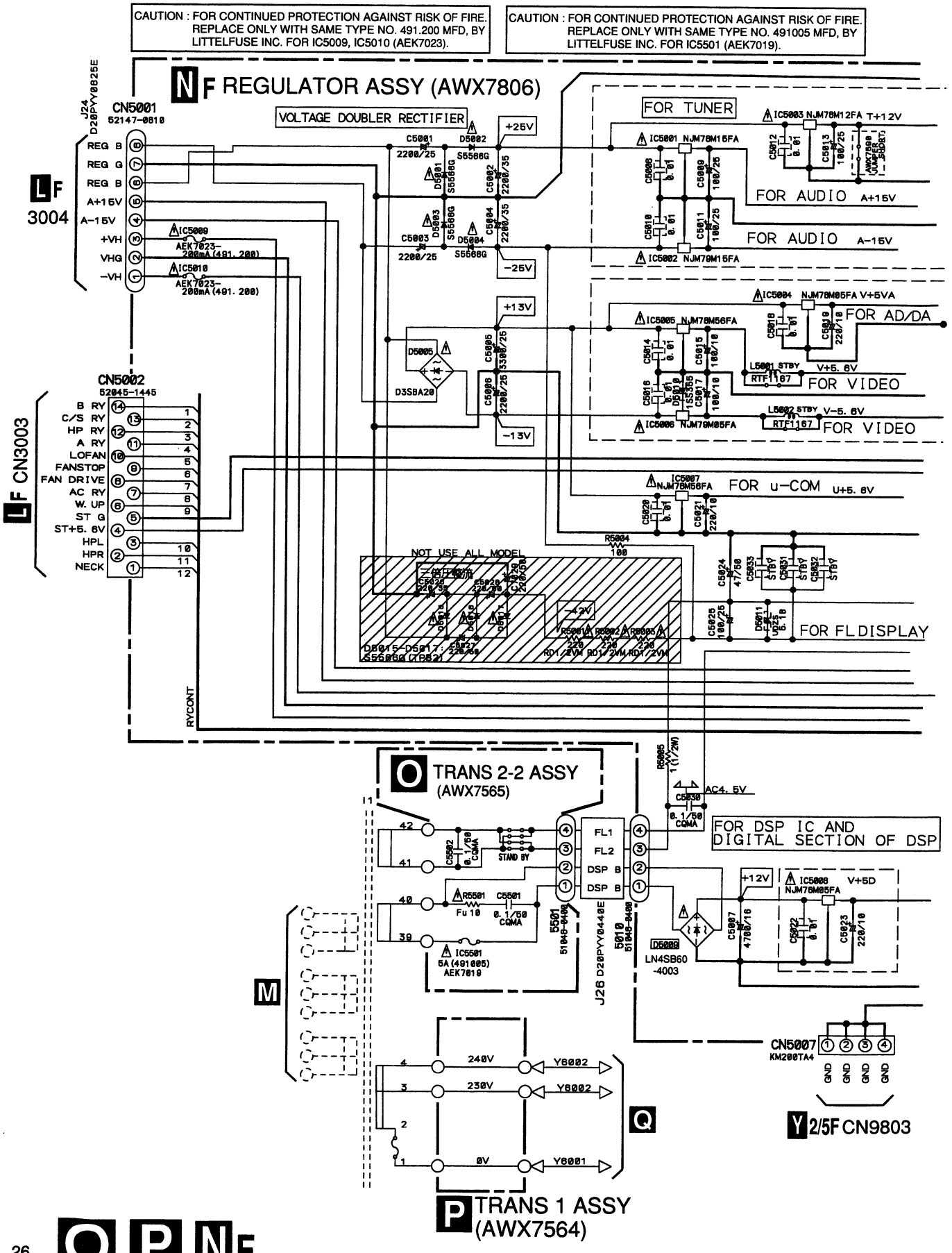

http://www.manualscenter.com

3.9 PRIMARY and P-SW ASSYS

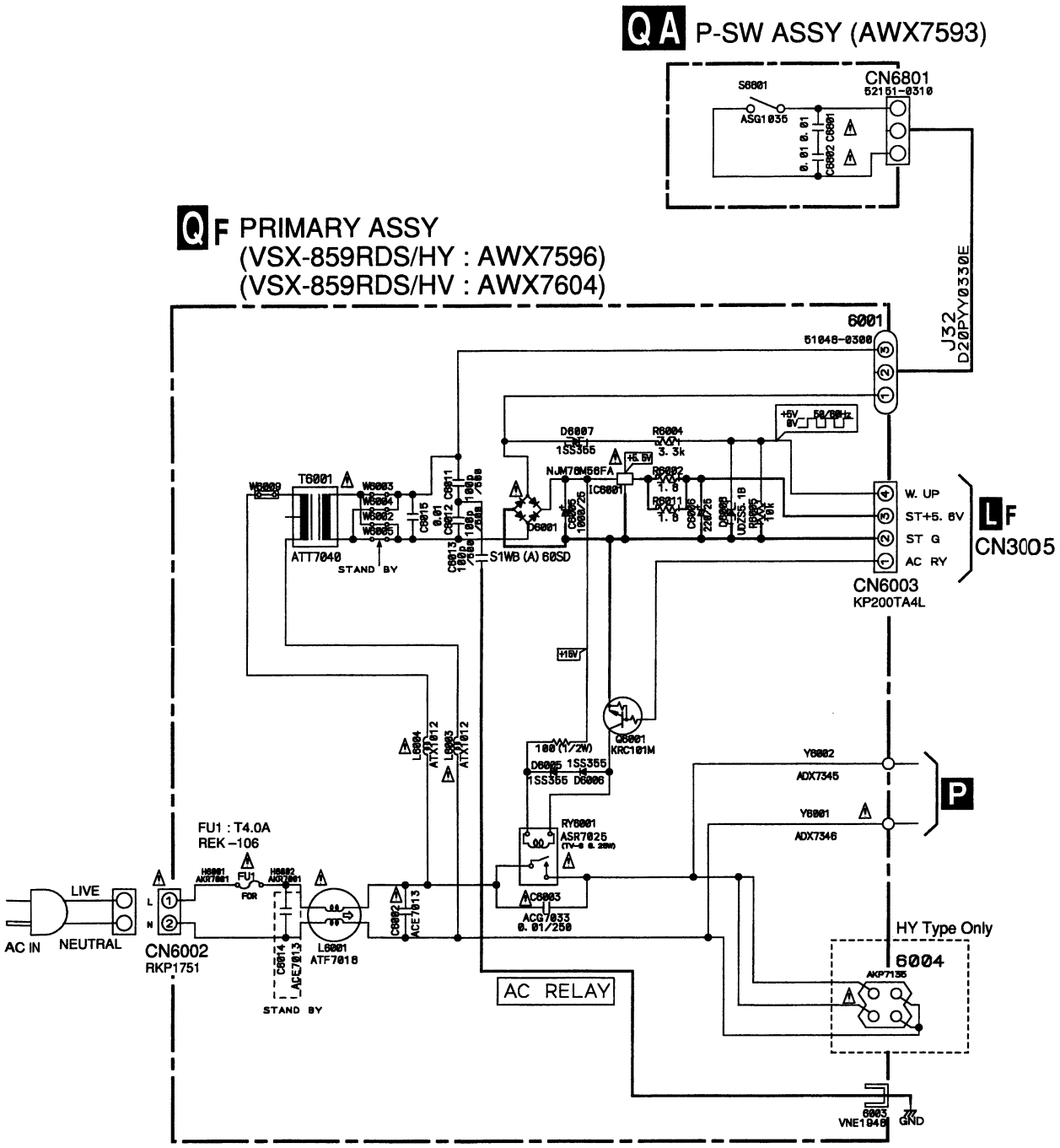

The ⚠ mark found on some component parts indicates the importance of the safety factor of the part. Therefore, when replacing, be sure to use parts of identical designation.

• NOTE FOR FUSE REPLACEMENT

CAUTION -FOR CONTINUED PROTECTION AGAINST RISK OF FIRE. REPLACE WITH SAME TYPE AND RATINGS ONLY.

http://www.manualscenter.com

3.10 DISPLAY ASSY

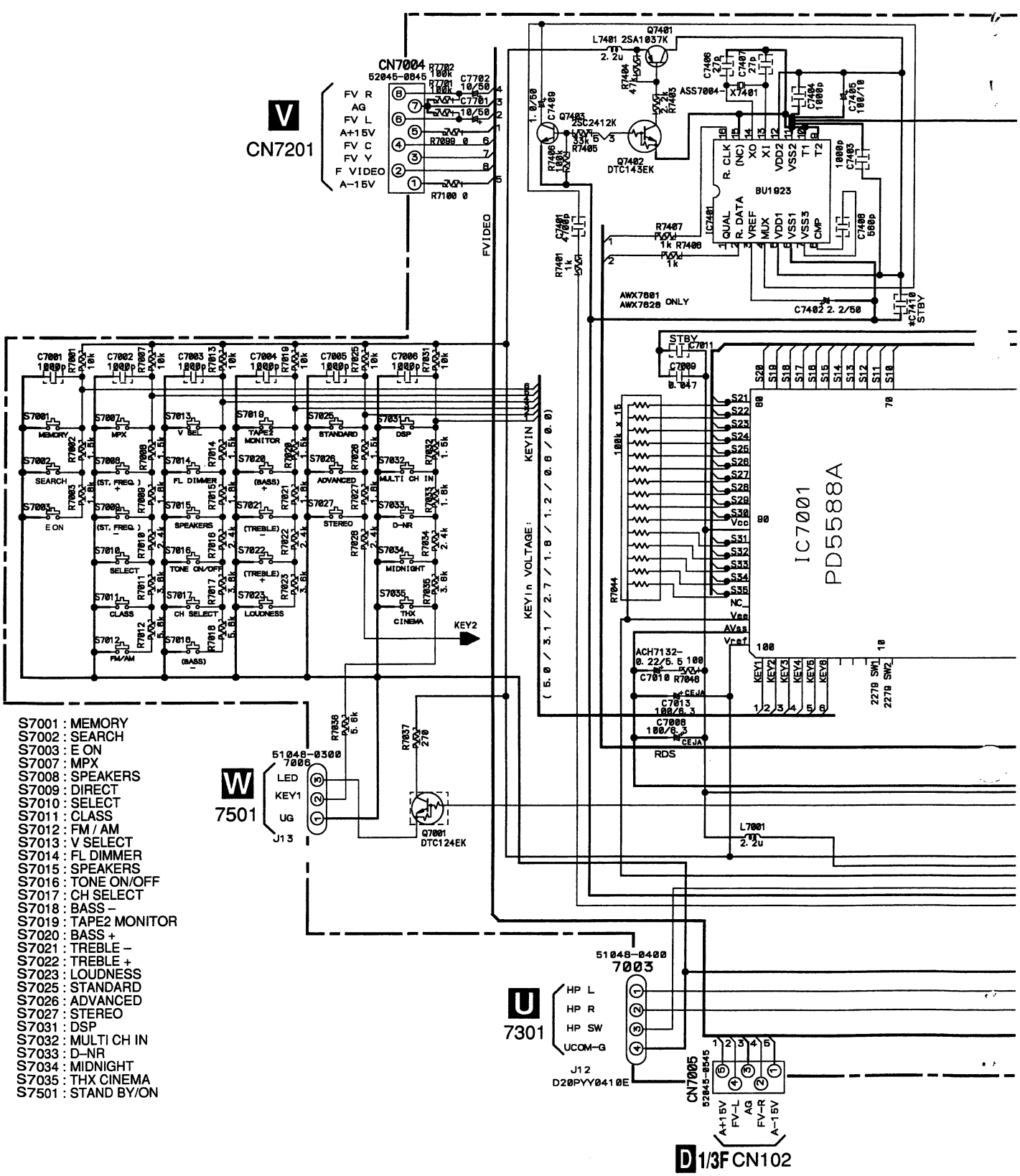

http://www.manualscenter.com

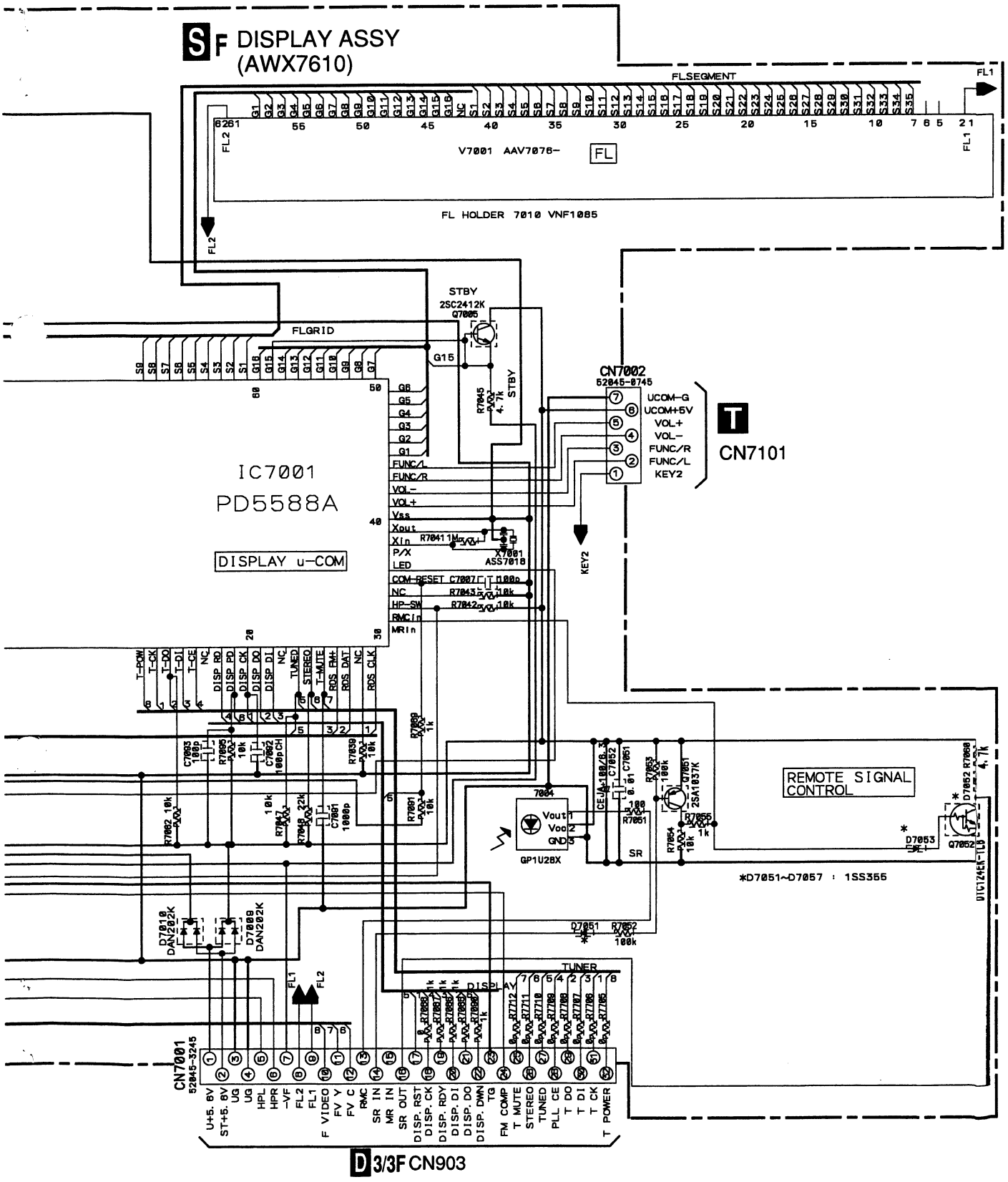

http://www.manualscenter.com

3.11 DSP ASSY (1/5)

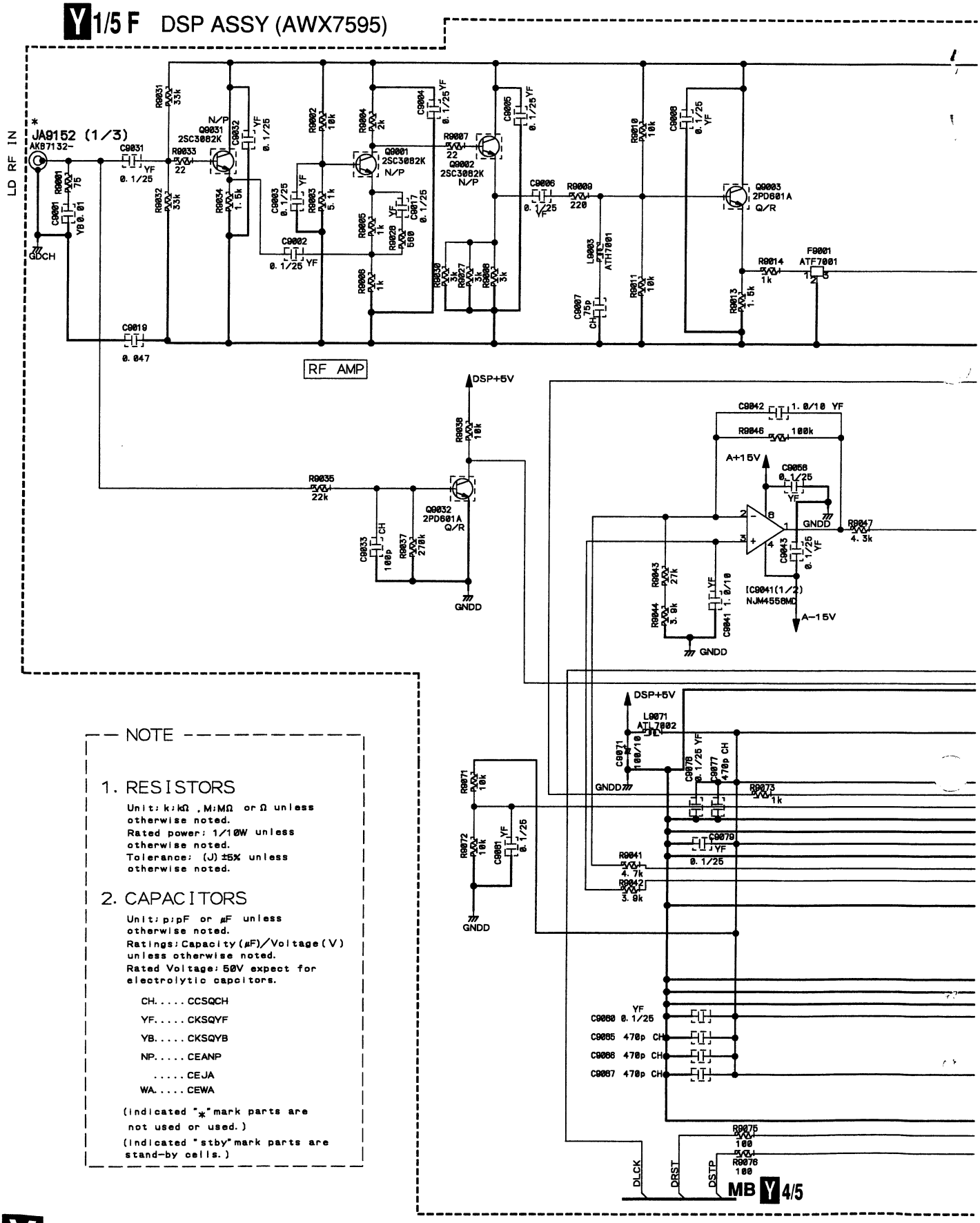

NOTE

1. RESISTORS

Unit: k:kΩ, M:MΩ or Ω unless otherwise noted.
Rated power: 1/10W unless otherwise noted.
Tolerance: (J) ±5% unless otherwise noted.

2. CAPACITORS

Unit: p:pF or μF unless otherwise noted.
Ratings: Capacity (μF)/Voltage (V) unless otherwise noted.
Rated Voltage: 50V expect for electrolytic capcitors.

CH..... CCSQCH
YF..... CKSQYF
YB..... CKSQYB
NP..... CEANP
..... CEJA
WA..... CEWA

(indicated "*" mark parts are not used or used.)
(indicated "stby" mark parts are stand-by cells.)

http://www.manualscenter.com

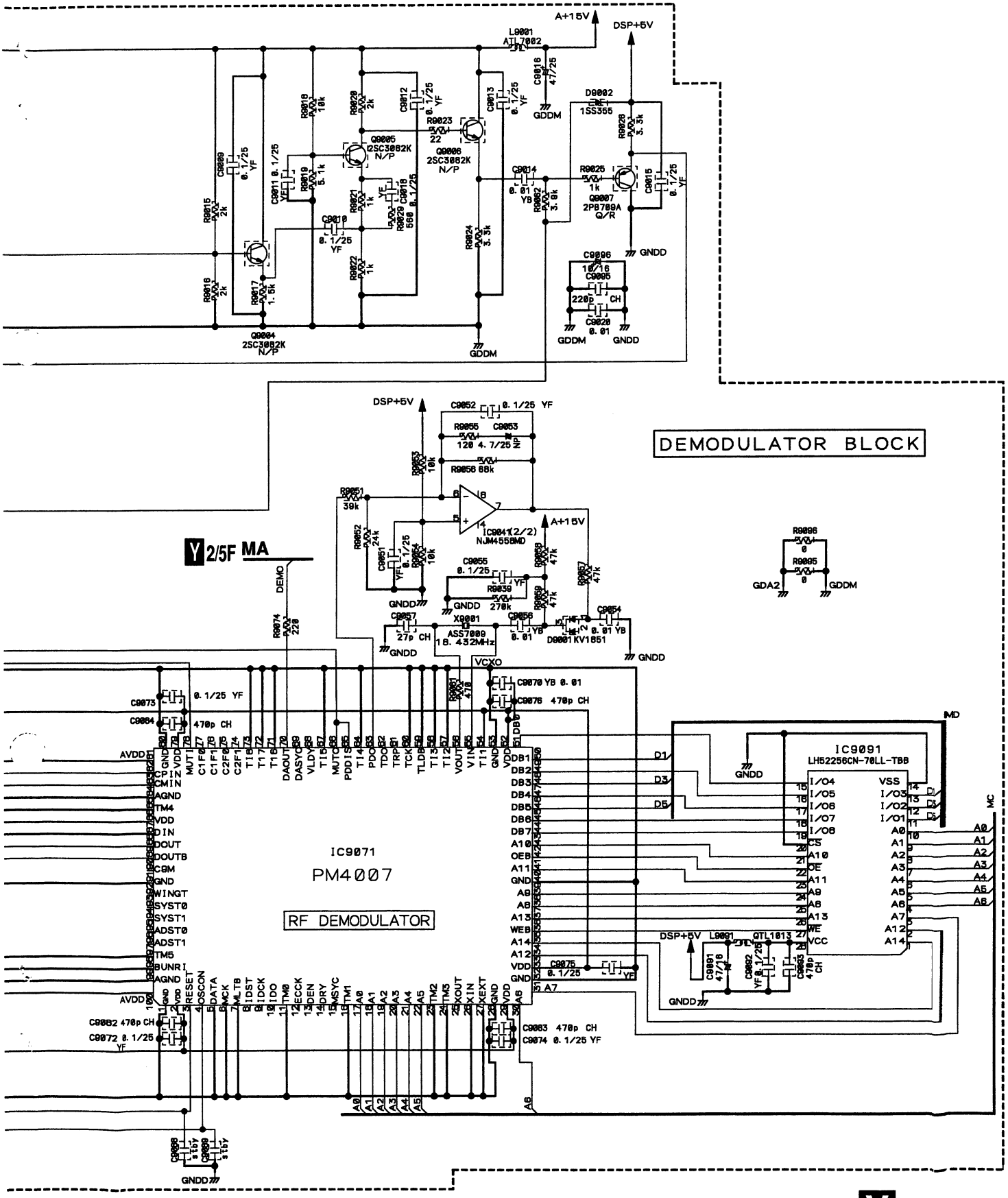

http://www.manualscenter.com

3.12 DSP ASSY (2/5)

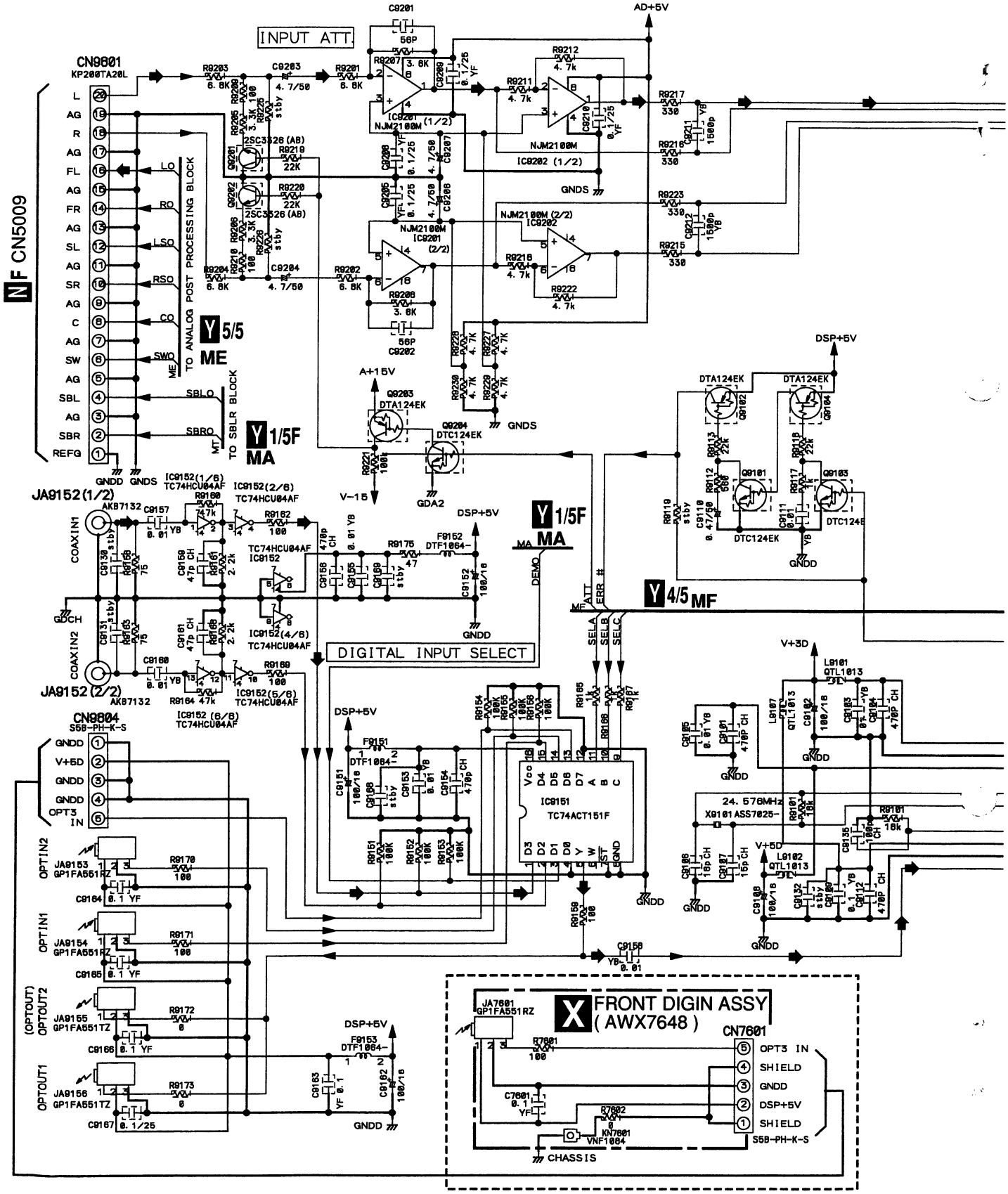

http://www.manualscenter.com

Y 2/5 F DSP ASSY (AWX7595)

➡: AUDIO SIGNAL ROUTE

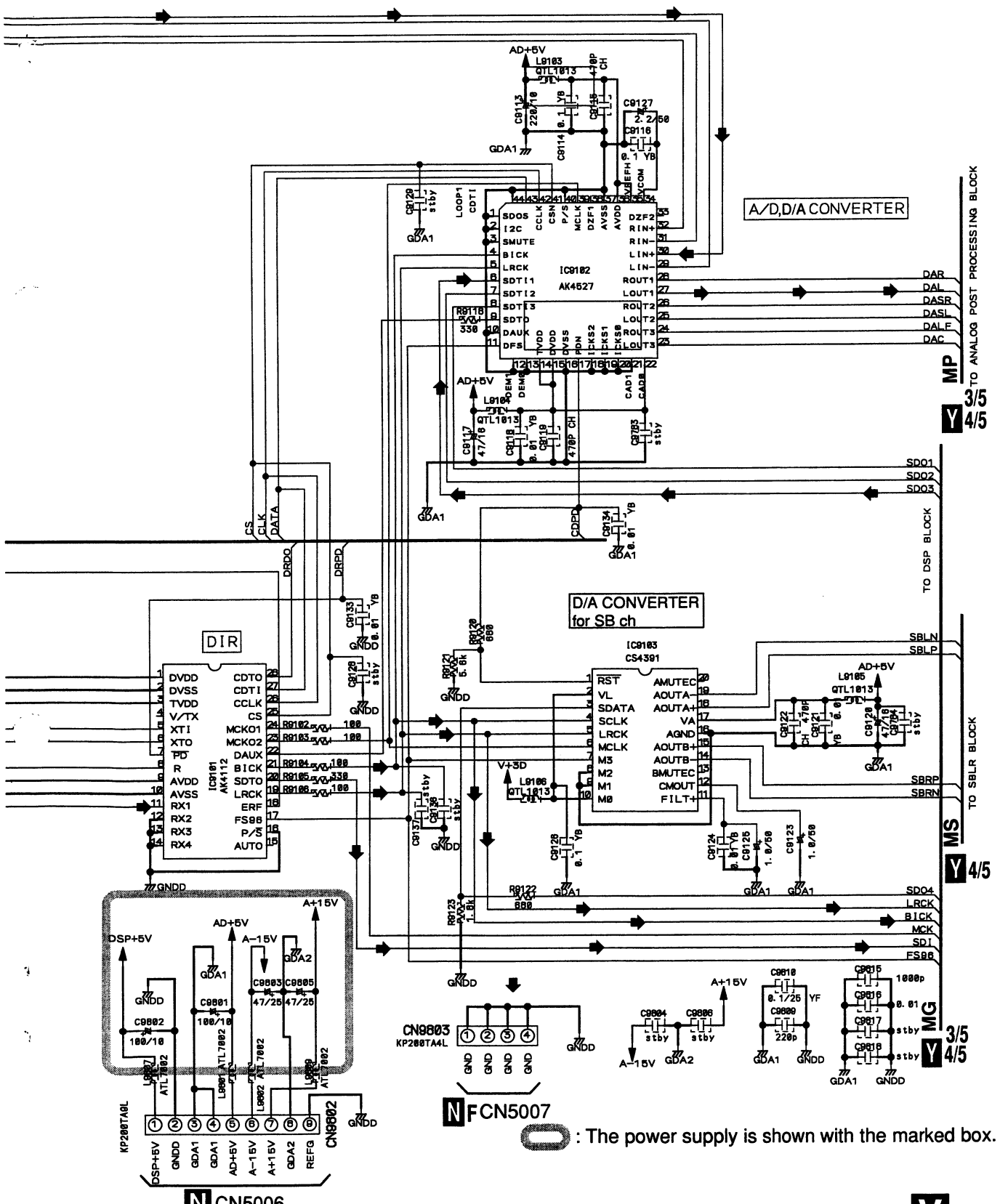

: The power supply is shown with the marked box.

http://www.manualscenter.com

4. REMOTE CONTROL UNIT [AXD7273]

4.1 CONTRAST OF MISCELLANEOUS PARTS

NOTES :
- *Parts marked by " NSP " are generally unavailable because they are not in our Master Spare Parts List.*
- *The ⚠ mark found on some component parts indicates the importance of the safety factor of the part. Therefore, when replacing, be sure to use parts of identical designation.*
- *Screw adjacent to ▼ mark on the product are used for disassembly.*
- *Reference Nos. indicate the pages and Nos. in the service manual for the base model.*

■ CONTRAST TABLE

AXD7273 and AXD7266 are constructed the same except for the following:

Ref. No.	Mark	Symbol and Description	Part No.		Remarks
			AXD7266	AXD7273	
P100-3		Rubber Sheet	AZA7397	AZA7402	
P100-15		Case A Assy	AZA7864	AZA7863	

■ REMOTE PCB MODEL SWITCH

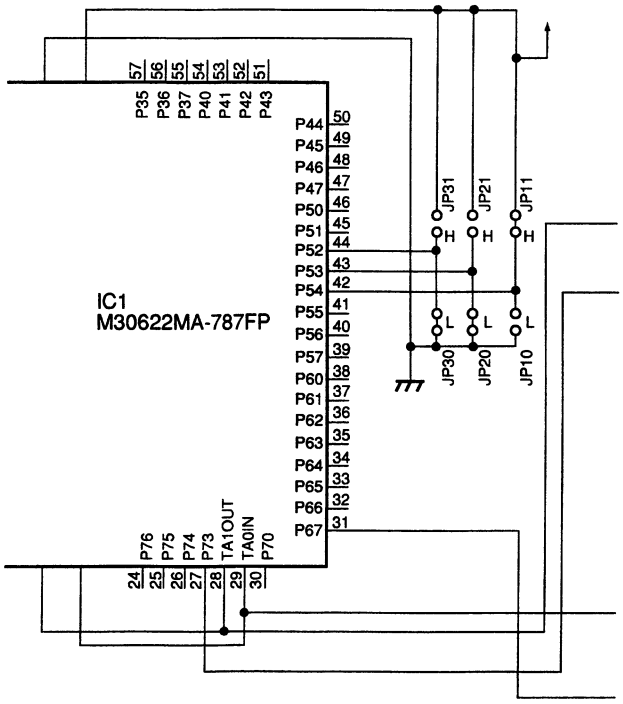

MODEL SWITCH

Model	JP10	JP11	JP20	JP21	JP30	JP31
AXD7257, AXD7278	–	O	–	O	–	O
AXD7258, AXD7279	–	O	–	O	O	–
AXD7259	–	O	O	–	–	O
AXD7266	–	O	O	–	O	–
AXD7273	O	–	–	O	–	O
AXD7275	O	–	–	O	O	–

Printed by: Schaltungsdienst Lange, Berlin (GERMANY)

Service Manual

Pioneer

PION -05864

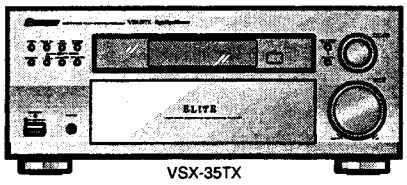

VSX-35TX

ORDER NO.
RRV2351

AUDIO/VIDEO MULTI-CHANNEL RECEIVER

VSX-35TX
VSX-33TX

THIS MANUAL IS APPLICABLE TO THE FOLLOWING MODEL(S) AND TYPE(S).

Type	Model		Power Requirement	Remarks
	VSX-35TX	VSX-33TX		
KUXJI/CA	○		AC120V	
KUXJI/CA		○	AC120V	

CONTENTS

1. SAFETY INFORMATION 2
2. EXPLODED VIEWS AND PARTS LIST 3
3. BLOCK DIAGRAM AND SCHEMATIC DIAGRAM 8
4. PCB CONNECTION DIAGRAM 48
5. PCB PARTS LIST 76
6. ADJUSTMENT 89
7. GENERAL INFORMATION 90
   7.1 DISASSEMBLY 90
   7.2 PARTS 92
      7.2.1 IC 92
      7.2.2 DISPLAY 97
   7.3 REMOTE CONTROL UNIT 100
8. PANEL FACILITIES AND SPECIFICATIONS 105

http://www.manualscenter.com

©PIONEER ELECTRONIC CORPORATION 2000

T – ZZR AUG. 2000

1. SAFETY INFORMATION

This service manual is intended for qualified service technicians ; it is not meant for the casual do-it-yourselfer. Qualified technicians have the necessary test equipment and tools, and have been trained to properly and safely repair complex products such as those covered by this manual.
Improperly performed repairs can adversely affect the safety and reliability of the product and may void the warranty. If you are not qualified to perform the repair of this product properly and safely, you should not risk trying to do so and refer the repair to a qualified service technician.

WARNING
This product contains lead in solder and certain electrical parts contain chemicals which are known to the state of California to cause cancer, birth defects or other reproductive harm.

Health & Safety Code Section 25249.6 – Proposition 65

NOTICE
(FOR CANADIAN MODEL ONLY)
Fuse symbols (fast operating fuse) and/or (slow operating fuse) on PCB indicate that replacement parts must be of identical designation.

REMARQUE
(POUR MODÈLE CANADIEN SEULEMENT)
Les symboles de fusible (fusible de type rapide) et/ou (fusible de type lent) sur CCI indiquent que les pièces de remplacement doivent avoir la même désignation.

(FOR USA MODEL ONLY)

1. SAFETY PRECAUTIONS

The following check should be performed for the continued protection of the customer and service technician.

LEAKAGE CURRENT CHECK

Measure leakage current to a known earth ground (water pipe, conduit, etc.) by connecting a leakage current tester such as Simpson Model 229-2 or equivalent between the earth ground and all exposed metal parts of the appliance (input/output terminals, screwheads, metal overlays, control shaft, etc.). Plug the AC line cord of the appliance directly into a 120V AC 60Hz outlet and turn the AC power switch on. Any current measured must not exceed 0.5mA.

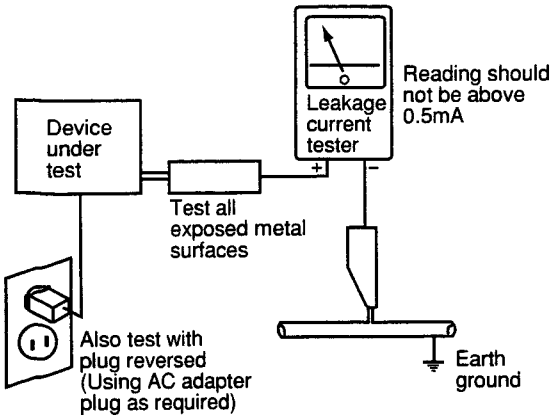

AC Leakage Test

ANY MEASUREMENTS NOT WITHIN THE LIMITS OUTLINED ABOVE ARE INDICATIVE OF A POTENTIAL SHOCK HAZARD AND MUST BE CORRECTED BEFORE RETURNING THE APPLIANCE TO THE CUSTOMER.

2. PRODUCT SAFETY NOTICE

Many electrical and mechanical parts in the appliance have special safety related characteristics. These are often not evident from visual inspection nor the protection afforded by them necessarily can be obtained by using replacement components rated for voltage, wattage, etc. Replacement parts which have these special safety characteristics are identified in this Service Manual.

Electrical components having such features are identified by marking with a ⚠ on the schematics and on the parts list in this Service Manual.
The use of a substitute replacement component which does not have the same safety characteristics as the PIONEER recommended replacement one, shown in the parts list in this Service Manual, may create shock, fire, or other hazards.

Product Safety is continuously under review and new instructions are issued from time to time. For the latest information, always consult the current PIONEER Service Manual. A subscription to, or additional copies of, PIONEER Service Manual may be obtained at a nominal charge from PIONEER.

2. EXPLODED VIEWS AND PARTS LIST

NOTES: ● *Parts marked by "NSP" are generally unavailable because they are not in our Master Spare Parts List.*
● *The ⚠ mark found on some component parts indicates the importance of the safety factor of the part. Therefore, when replacing, be sure to use parts of identical designation.*
● *Screws adjacent to ▼ mark on the product are used for disassembly.*

2.1 PACKING

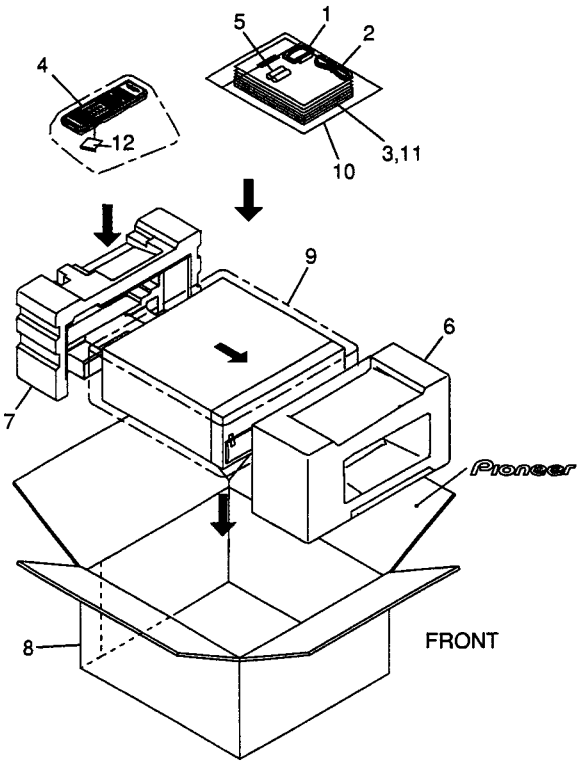

(1) PACKING PARTS LIST

Mark	No.	Description	Part No.
	1	AM Loop Antenna	ATB7009
	2	FM Wire Antenna	ADH7004
	3	Operating Instructions (English)	See Contrast table (2)
	4	Remote Control Unit	See Contrast table (2)
NSP	5	Alkaline Dry Cell Battery (LR6, AA)	VEM1021
	6	Front Pad 35	AHA7287
	7	Rear Pad 35	AHA7288
	8	Packing Case	See Contrast table (2)
	9	Packing Sheet	AHG7010
NSP	10	Polyethylene Bag (230 × 340 × 0.03)	Z21-038
NSP	11	Warranty Card	ARY7007
	12	Battery Cover	See Contrast table (2)

(2) CONTRAST TABLE

VSX-35TX and VSX-33TX are constructed the same except for the following :

Mark	No.	Symbol and Description	Part No.		Remarks
			VSX-35TX	VSX-33TX	
	3	Operating Instructions (English)	ARB7222	ARB7223	
	4	Remote Control Unit (35TX)	AXD7266	Not used	
	4	Remote Control Unit (33TX)	Not used	AXD7267	
	8	Packing Case 35TX	AHD7860	Not used	
	8	Packing Case 33TX	Not used	AHD7861	
	12	Battery Cover	AZN7841	AZN7826	

http://www.manualscenter.com

2.2 EXTERIOR SECTION

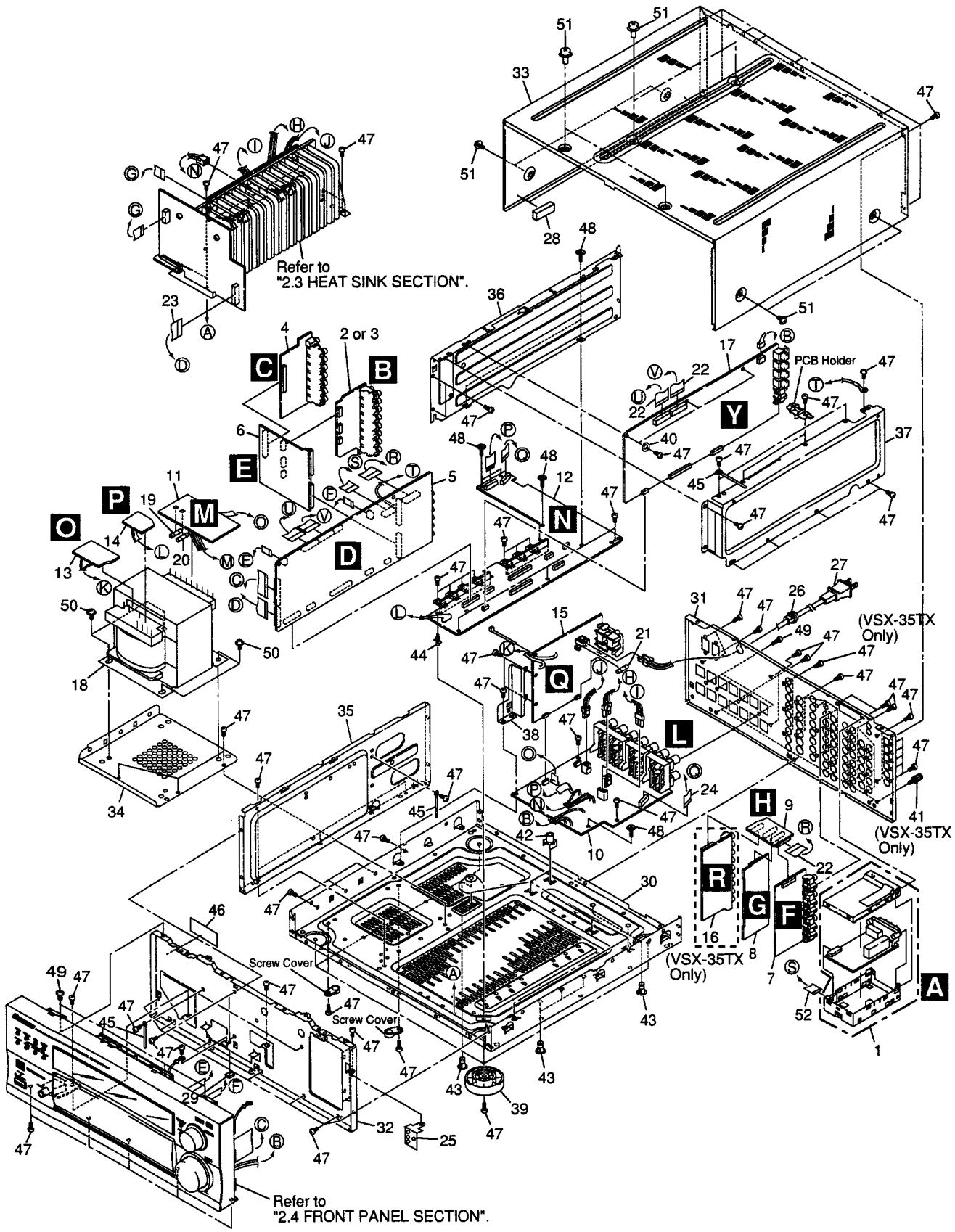

(1) EXTERIOR PARTS LIST

Mark	No.	Description	Part No.
	1	FM/AM TUNER Module	AXQ7231
	2	EX I/O Assy	See Contrast table (2)
	3	5.1CH I/O Assy	See Contrast table (2)
	4	INPUT Assy	See Contrast table (2)
	5	MAIN CONTROL Assy	See Contrast table (2)
	6	A-CONNECTION Assy	See Contrast table (2)
	7	COMPOSITE Assy	See Contrast table (2)
	8	S VIDEO Assy	See Contrast table (2)
	9	V-CONNECTION Assy	See Contrast table (2)
	10	SP/PS Assy	See Contrast table (2)
	11	TRANS 2-1 Assy	AWX7572
	12	REGULATOR Assy	AWX7562
	13	TRANS 2-2 Assy	See Contrast table (2)
NSP	14	TRANS 1 Assy	AWX7564
	15	PRIMARY Assy	AWX7563
	16	COMPONENT Assy	See Contrast table (2)
	17	DSP Assy	See Contrast table (2)
⚠	18	Power Transformer (T1)	ATS7284
⚠	19	Fuse (FU4 : 2.5A)	REK1112
⚠	20	Fuse (FU5 : 2.5A)	REK1112
⚠	21	Fuse (FU1 : 10A)	VEK1029
	22	20P Flexible Cable/60V	ADD7241
	23	22P Flexible Cable/60V	ADD7243
	24	14P Flexible Cable/60V	ADD7244
	25	SE Angle 35	ANG7335
	26	Cord Stopper	CM-22C
⚠	27	Power Cord	VDG1075
	28	Spacer 35 (3 × 10 × 40)	AEB7210
	29	Cushion 8 × 8	AED7046
NSP	30	Under Base	ANA7113
	31	Rear Panel	See Contrast table (2)
NSP	32	Panel Stay 35	AND7035
	33	Bonnet 35	AZN7835
	34	Trans Frame 35	ANG7292
	35	Trans Shield 35	ANG7293
	36	DSP Shield 35 A	ANG7295
	37	DSP Shield 35 B	ANG7296
	38	Primary Angle 35	ANG7301
	39	Insulator	PNW2766
	40	Fiber Washer	VEC1254
	41	Earth Terminal	See Contrast table (2)
	42	PCB Mold	AMR2534
	43	Card Spacer	DNK2769
	44	Locking Card Spacer	PNW2917
	45	Cord Clamper	RNH-184
	46	65 Label	ARW7050
	47	Screw	BBZ30P080FZK
	48	Screw	IBZ30P150FCC
	49	Screw	IBZ30P100FCC
	50	Screw	ABA7066
	51	Screw	FBT40P080FZK
	52	13P Flexible Cable/60V	ADD7242

(2) CONTRAST TABLE

VSX-35TX and VSX-33TX are constructed the same except for the following :

Mark	No.	Symbol and Description	Part No.		Remarks
			VSX-35TX	VSX-33TX	
	2	EX I/O Assy	AWX7568	Not used	
	3	5.1CH I/O Assy	Not used	AWX7613	
	4	INPUT Assy	AWX7573	AWX7585	
	5	MAIN CONTROL Assy	AWX7560	AWX7610	
	6	A-CONNECTION Assy	AWX7566	AWX7619	
	7	COMPOSITE Assy	AWX7581	AWX7617	
	8	S VIDEO Assy	AWX7580	AWX7616	
	9	V-CONNECTION Assy	AWX7567	AWX7717	
	10	SP/PS Assy	AWX7571	AWX7721	
	13	TRANS 2-2 Assy	AWX7565	AWX7720	
	16	COMPONENT Assy	AWX7582	Not used	
	17	DSP Assy	AWX7561	AWX7611	
	31	Rear Panel 35	ANC7910	Not used	
	31	Rear Panel 33	Not used	ANC7911	
	41	Earth Terminal	AKE-031	Not used	

2.3 HEAT SINK SECTION

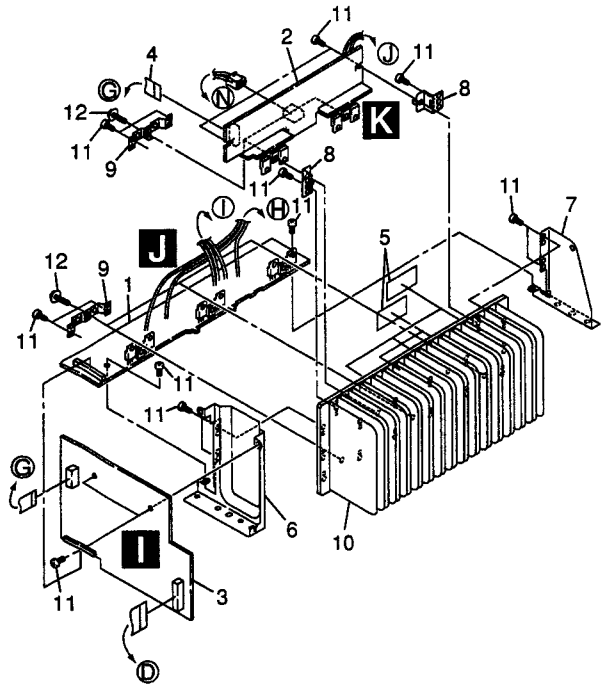

● HEAT SINK SECTION PARTS LIST

Mark	No.	Description	Part No.
	1	FRONT AMP Assy	AWX7569
	2	REAR AMP Assy	AWX7570
	3	V-AMP Assy	AWX7578
	4	13P Flexible Cable/60V	ADD7242
	5	Mica Sheet 35	AEE7035
	6	H.S Angle 35 F	ANG7297
	7	H.S Angle 35 R	ANG7298
	8	PCB Angle 35	ANG7299
	9	FET Angle 35	ANG7300
NSP	10	Heat Sink 35	ANH7126
	11	Screw	BBZ30P080FZK
	12	Screw	IBZ30P150FCC

2.4 FRONT PANEL SECTION

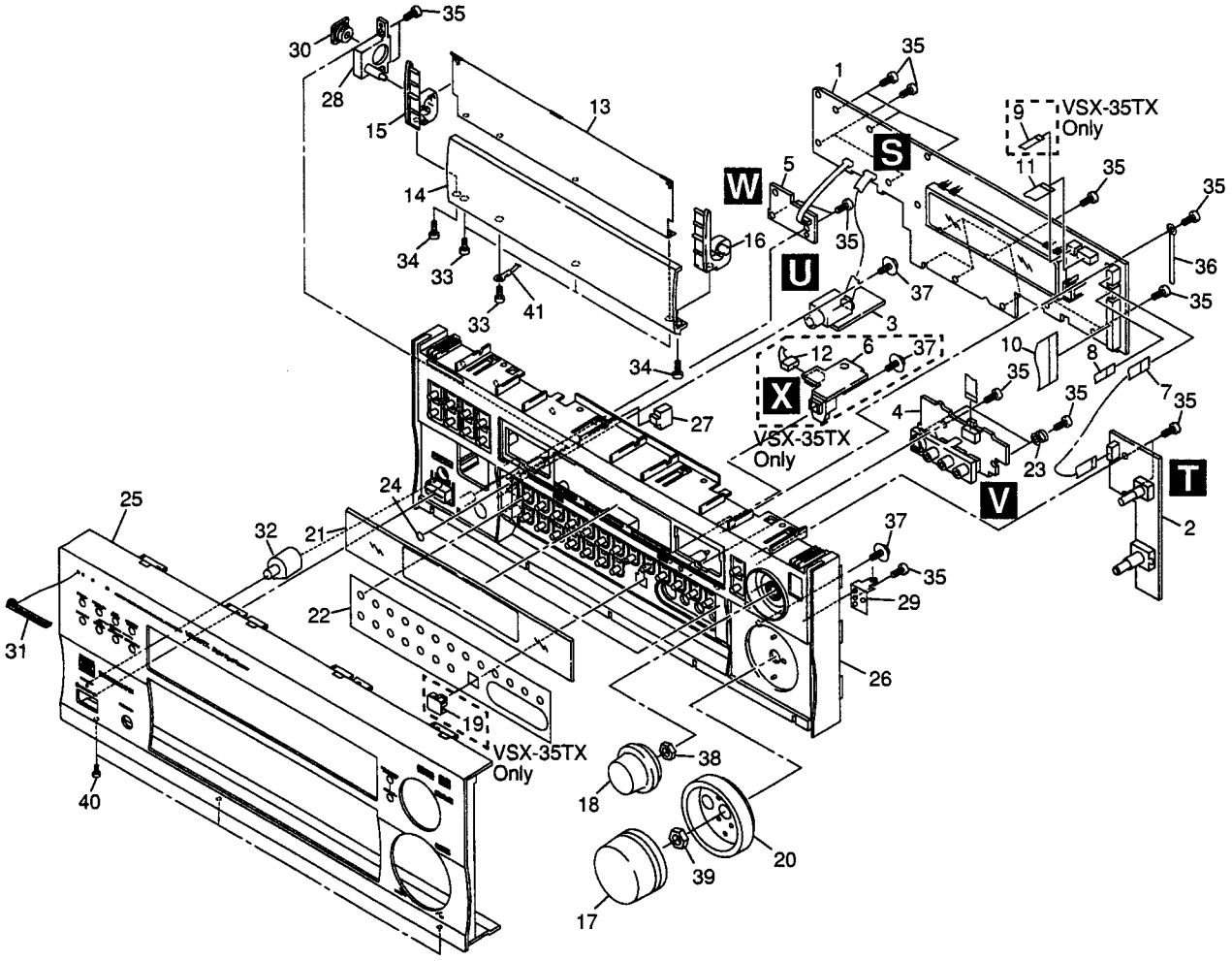

http://www.manualscenter.com

(1) FRONT PANEL SECTION PARTS LIST

Mark	No.	Description	Part No.
	1	DISPLAY Assy	See Contrast table (2)
	2	VOLUME-CONT Assy	AWX7577
	3	HEADPHONE Assy	AWX7602
	4	FRONT AV Assy	AWX7579
	5	STAND BY Assy	AWX7576
	6	FRONT DIGIN Assy	See Contrast table (2)
	7	7P Flexible Cable/60V	ADD7236
	8	5P Flexible Cable/60V	ADD7237
	9	4P Flexible Cable/60V	See Contrast table (2)
	10	32P Flexible Cable/60V	ADD7239
	11	8P Flexible Cable/60V	ADD7240
	12	5P Shield Wire with Housing	See Contrast table (2)
	13	Door Stay 35	AAH7063
	14	Door 35	AMB7692
	15	Door Hinge 35 L	AMR7291
	16	Door Hinge 35 R	AMR7293
	17	Volume Knob 26	AAB7193
	18	Rotary Knob 35	AAB7226
	19	Digital Cap 35	See Contrast table (2)
	20	Volume Ring 26	AAK7623
	21	Window	See Contrast table (2)
	22	Door Sheet	See Contrast table (2)
NSP	23	Earth Spring 35	ABH7193
	24	Cushion Circle 6B	AED7044
	25	Front Panel	See Contrast table (2)
	26	Panel Base 35	AMB7695
	27	Magnet 35	AMF7007
	28	Door Shaft 35	AMR7295
	29	SE Angle 35	ANG7334
	30	Damper Assy (100)	AXA7089
	31	Pioneer Badge	PAM1776
	32	LED Lens	PNW2019
	33	Screw	BBZ26P060FZK
	34	Screw	BPZ26P080FMC
	35	Screw	BPZ30P080FMC
	36	Cord Clamper	RNH-184
	37	Screw	ABA7009
	38	Nut	MK70FUC
	39	Nut	MK90FUC
	40	Screw	BBZ30P080FZK
	41	Earth Lead Wire	ADH7022

(2) CONTRAST TABLE

VSX-35TX and VSX-33TX are constructed the same except for the following :

Mark	No.	Symbol and Description	Part No.		Remarks
			VSX-35TX	VSX-33TX	
	1	DISPLAY Assy	AWX7574	AWX7614	
	6	FRONT DIGIN Assy	AWX7648	Not used	
	9	4P Flexible Cable/60V	ADD7238	Not used	
	12	5P Shield Wire with Housing	ADX7344	Not used	
	19	Digital Cap 35	AAD7576	Not used	
	21	Window 35R	AAK7769	Not used	
	21	Window 33R	Not used	AAK7733	
	22	Door Sheet 35	AAK7783	Not used	
	22	Door Sheet 33	Not used	AAK7775	
	25	Front Panel 35	AMB7691	Not used	
	25	Front Panel 33	Not used	AMB7714	

http://www.manualscenter.com

3. BLOCK DIAGRAM AND SCHEMATIC DIAGRAM

3.1 BLOCK DIAGRAM

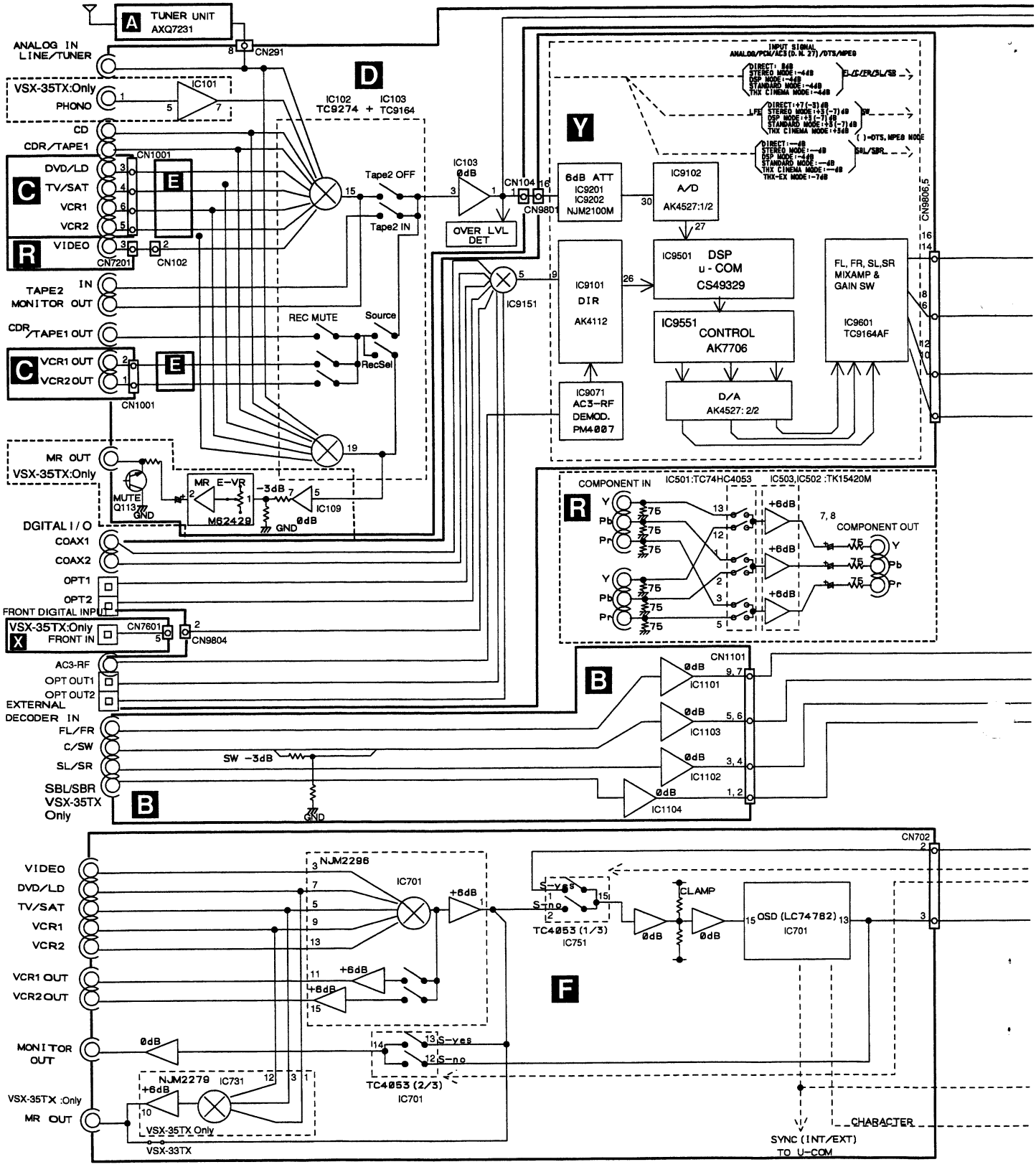

http://www.manualscenter.com

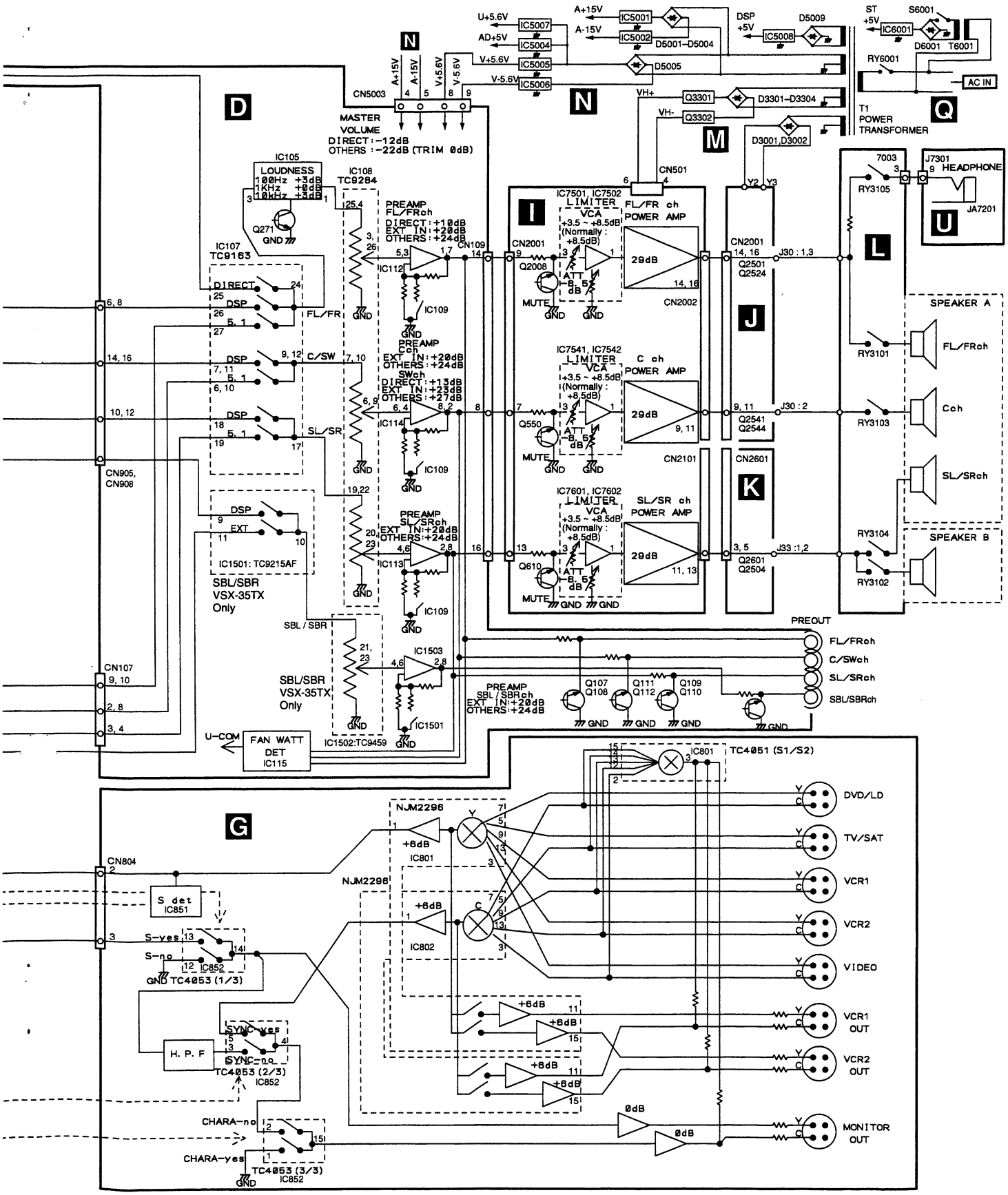

http://www.manualscenter.com

3.2 OVERALL WIRING DIAGRAM

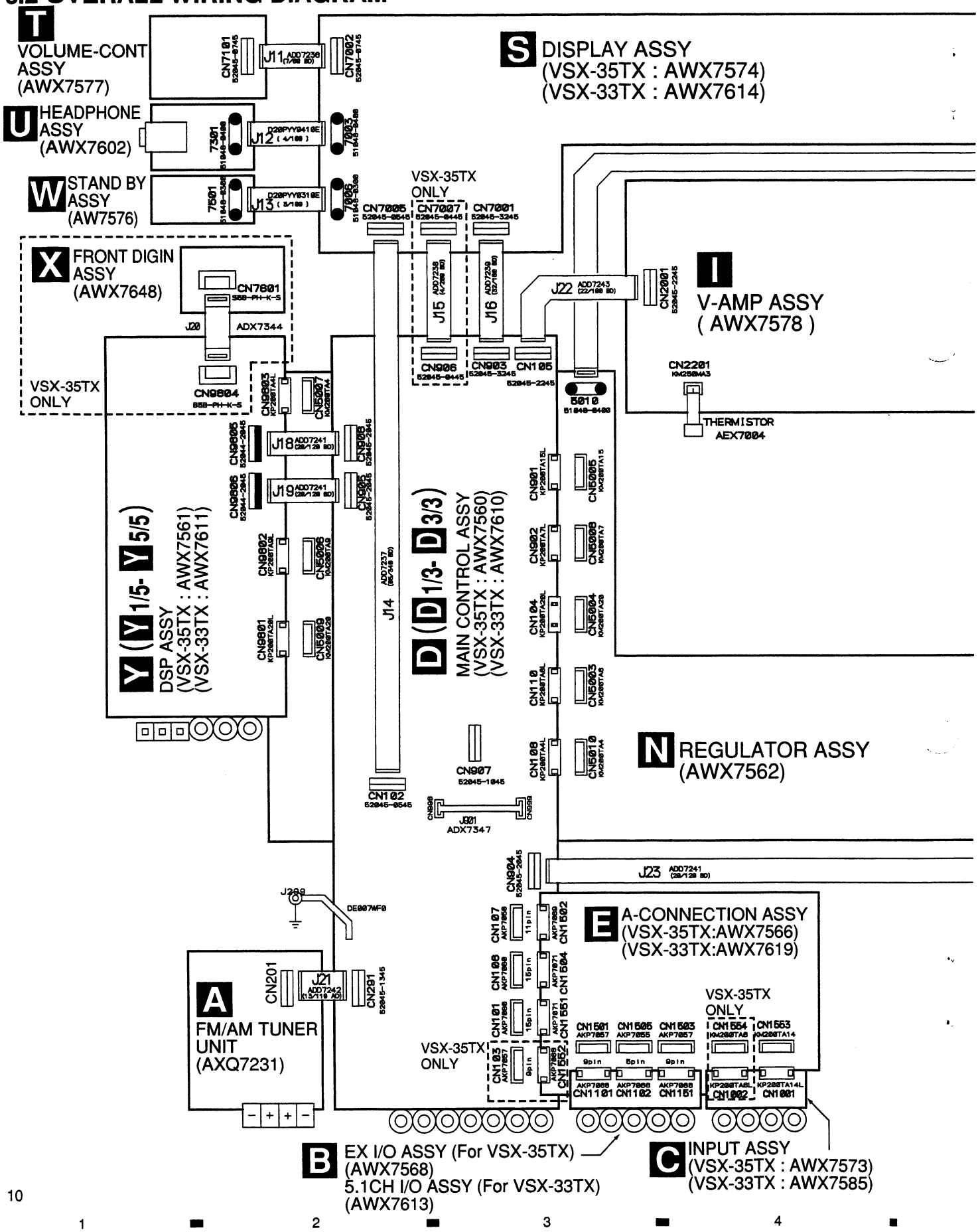

http://www.manualscenter.com

Note : When ordering service parts, be sure to refer to "EXPLODED VIEWS and PARTS LIST" or "PCB PARTS LIST".

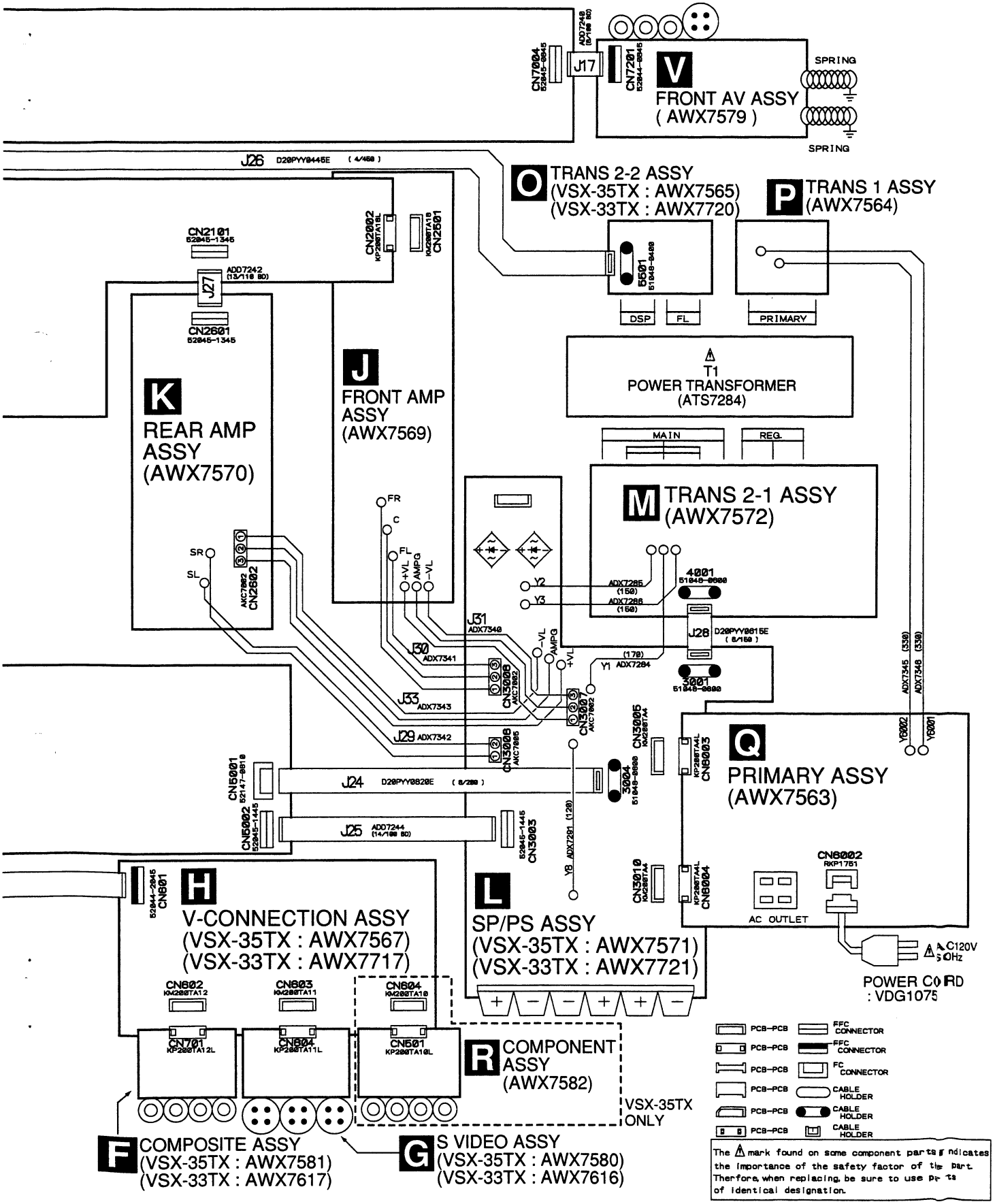

http://www.manualscenter.com

3.3 FM/AM TUNER UNIT

A FM/AM TUNER UNIT (AXQ7231)

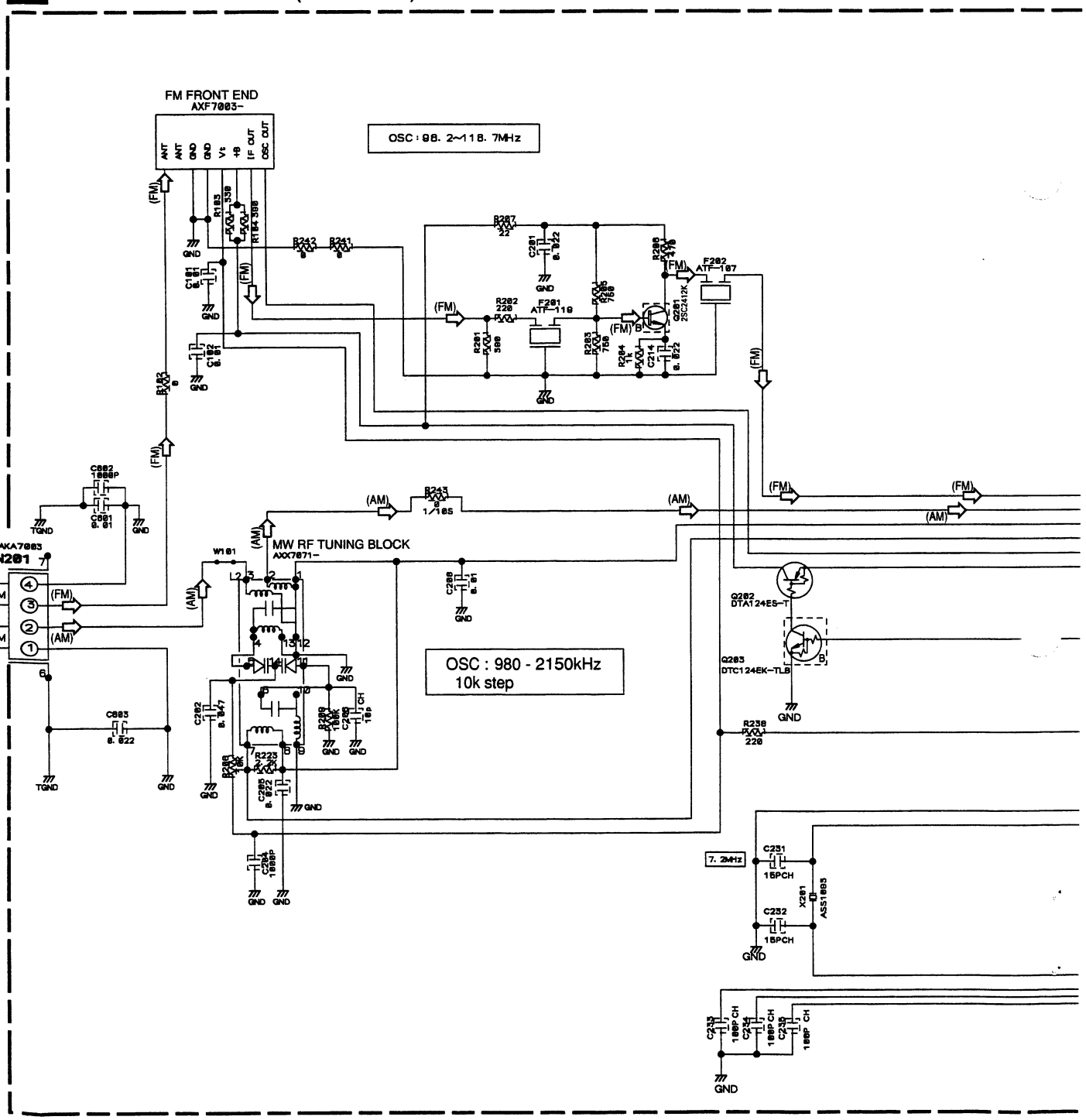

http://www.manualscenter.com

Notes

: The power supply is shown with the marked box.

1. RESISTORS
   Indicated in Ω, 1/16W±5% Tolerance unless otherwise noted K;KΩ, M;MΩ.
2. CAPACITORS
   Indicated in Capacity(μF)/VOLTAGE(V) unless otherwise noted P;PF.
3. DIODES
   No mark diode is 1SS133.

(TX) : AUDIO SIGNAL ROUTE (TUNER)
(AM) : AM SIGNAL ROUTE
(FM) : FM SIGNAL ROUTE

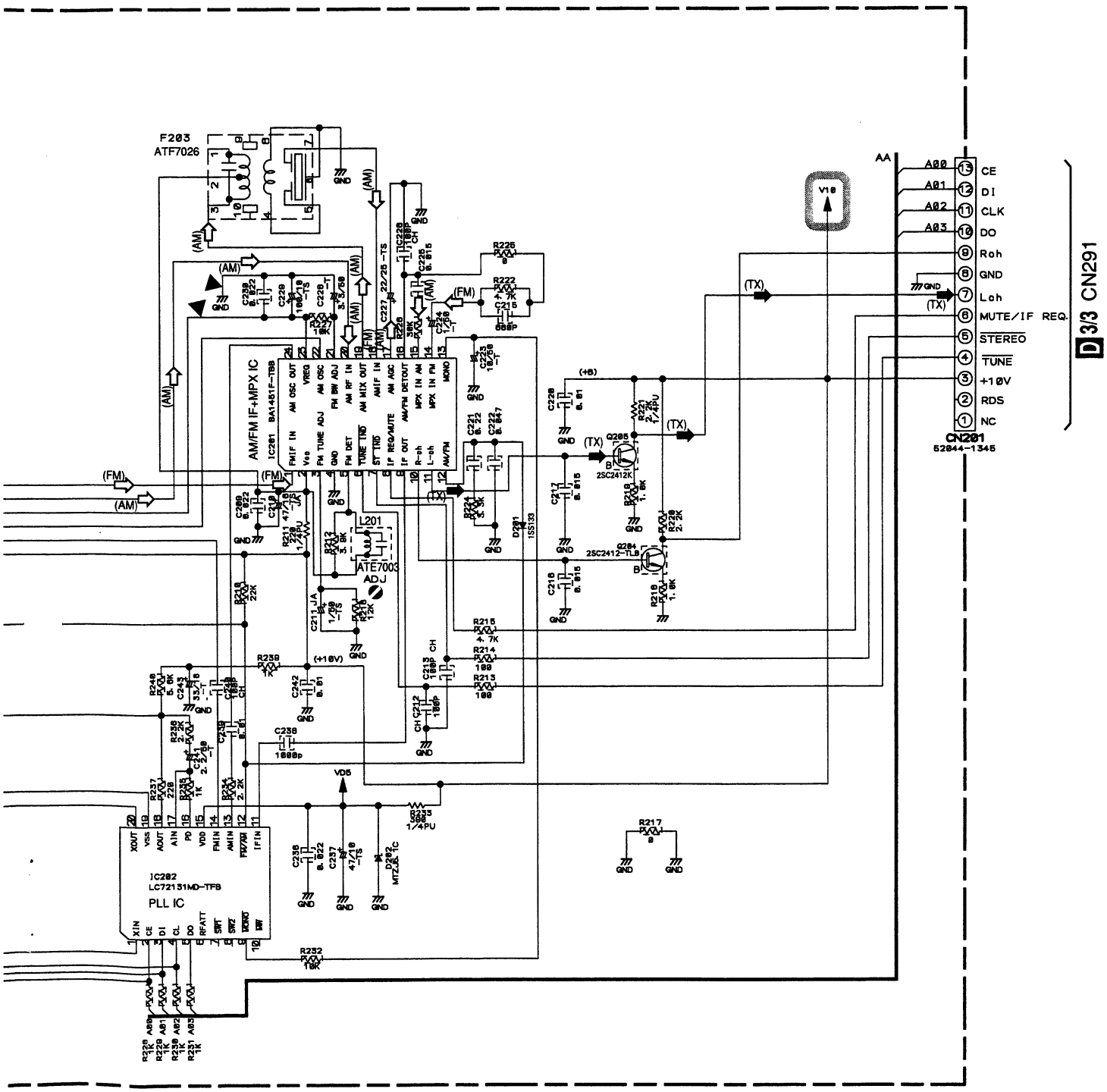

http://www.manualscenter.com

3.4 EX I/O (5.1CH I/O) ASSY

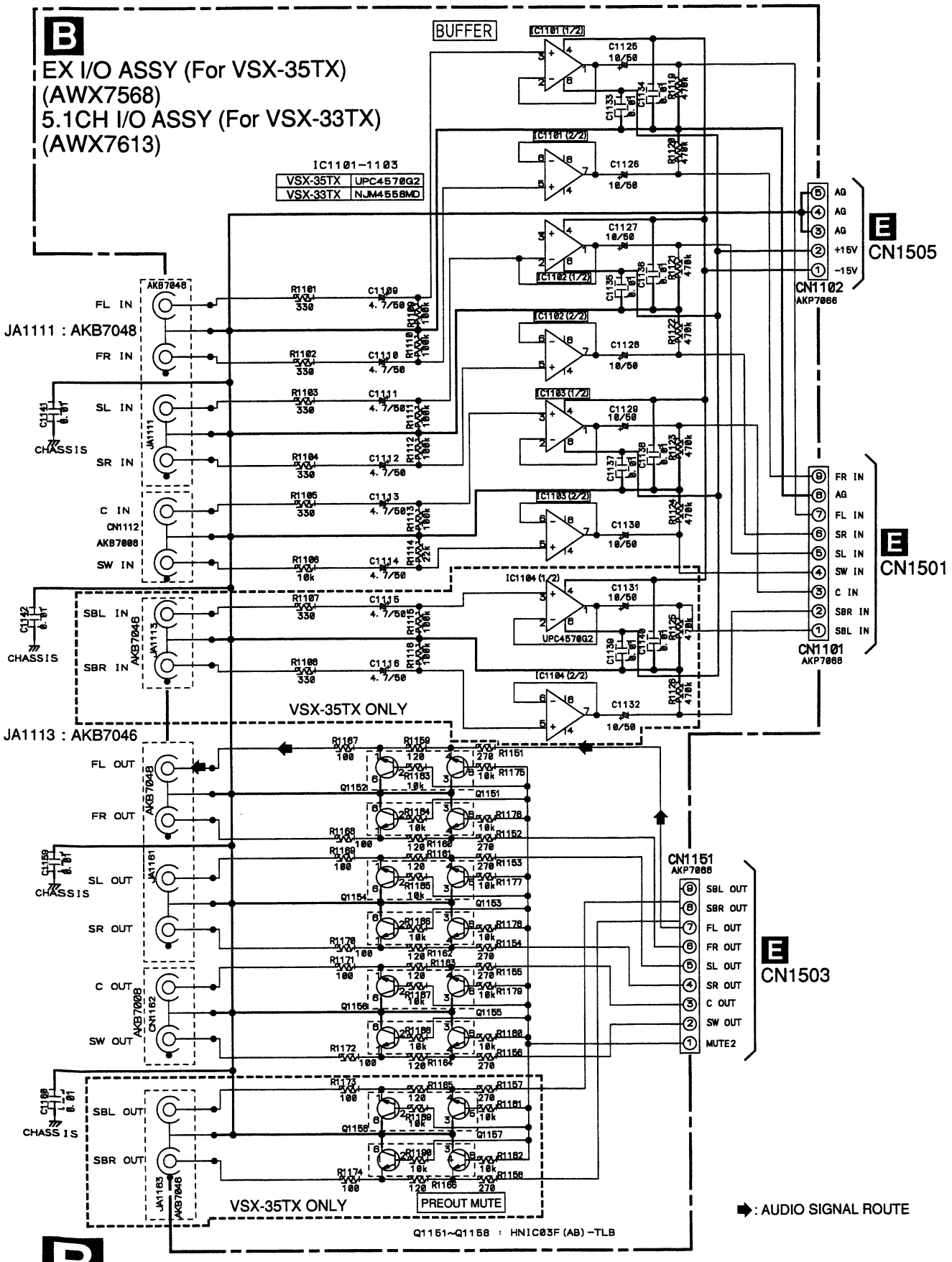

http://www.manualscenter.com

3.5 INPUT ASSY

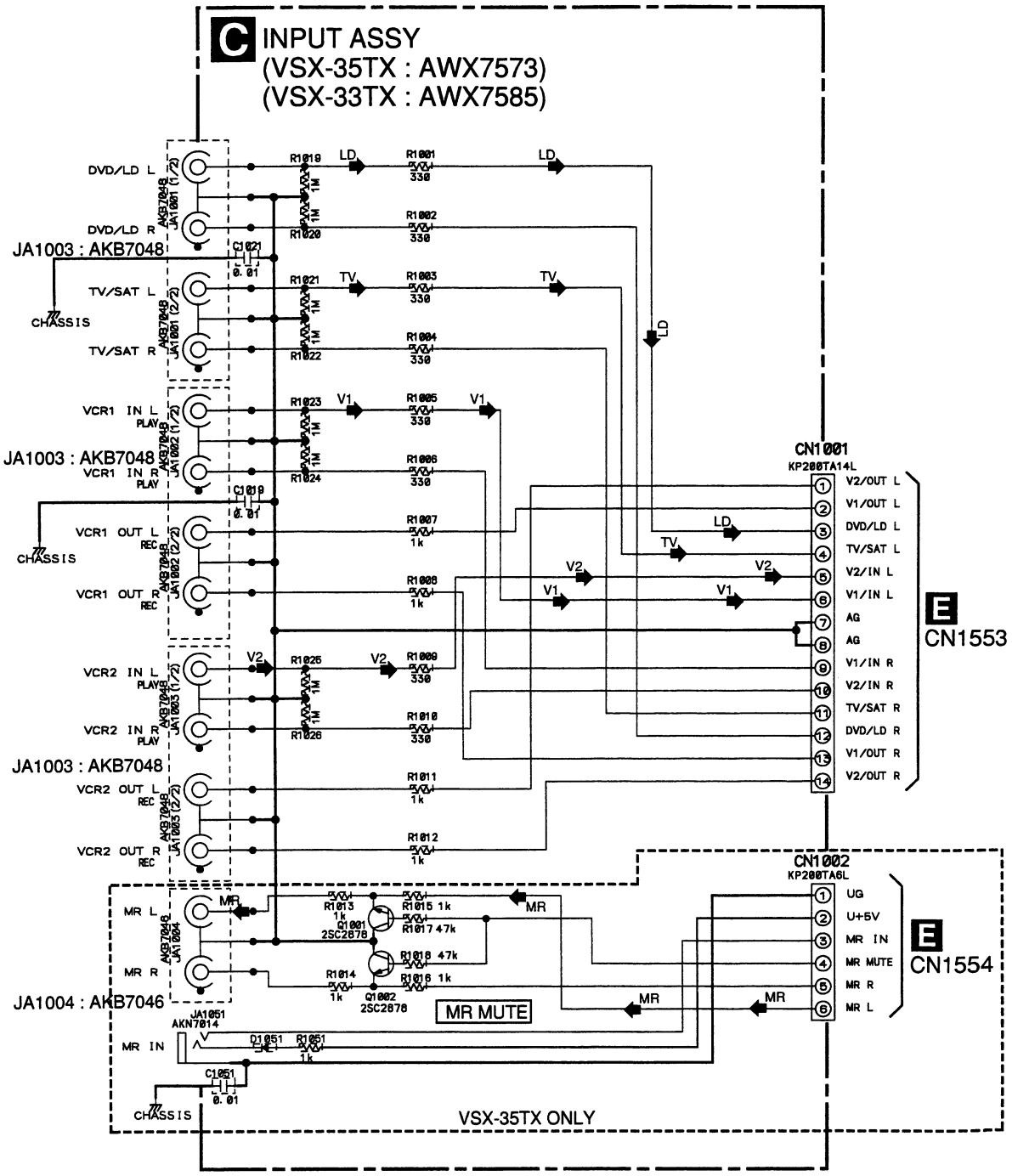

➡: AUDIO SIGNAL ROUTE
LD➡: AUDIO SIGNAL ROUTE (LD)
TV➡: AUDIO SIGNAL ROUTE (TV)
V1➡: AUDIO SIGNAL ROUTE (VCR1)
V2➡: AUDIO SIGNAL ROUTE (VCR2)
MR➡: AUDIO SIGNAL ROUTE (MR)

http://www.manualscenter.com

3.6 MAIN CONTROL ASSY (1/3)

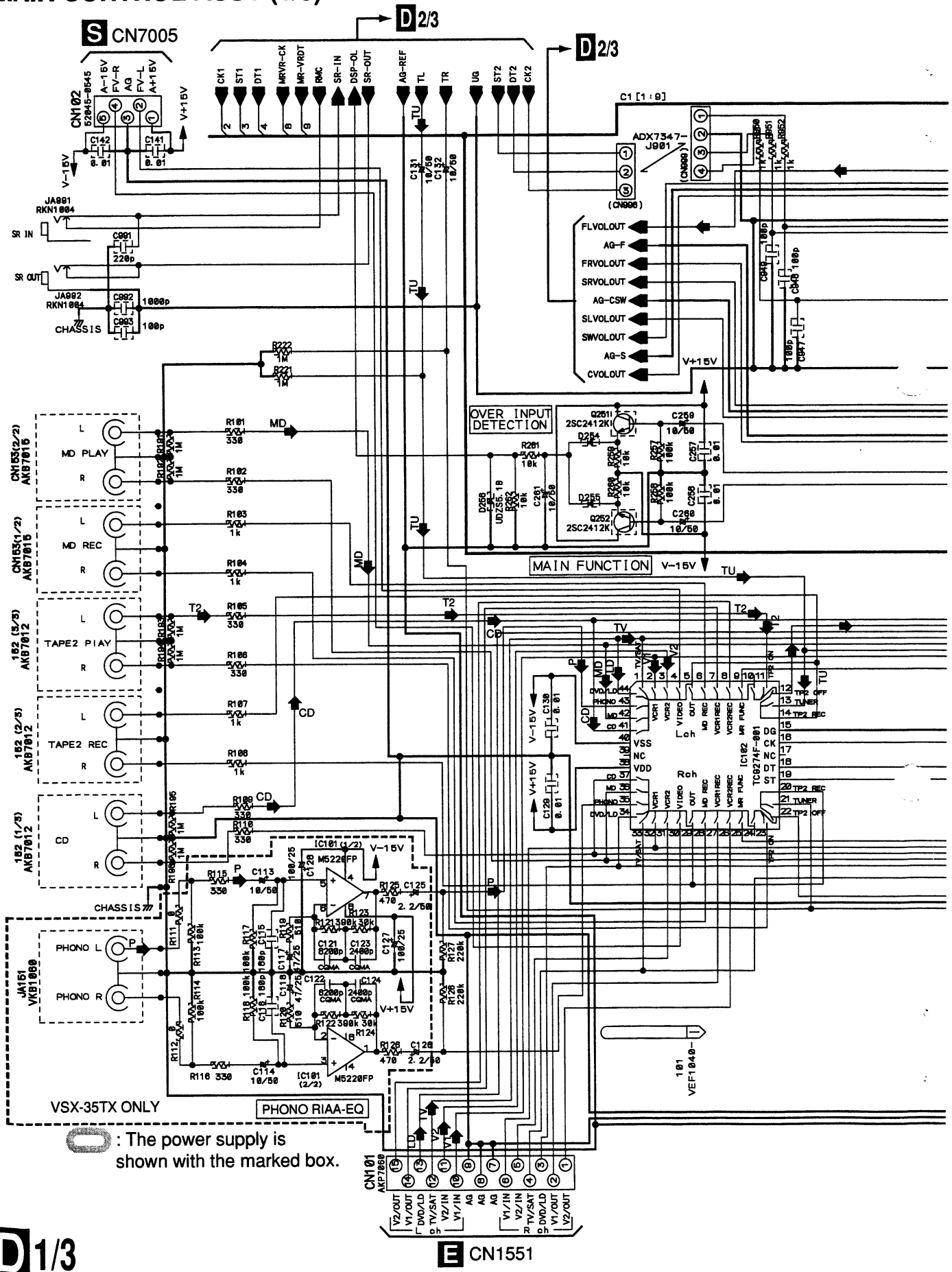

http://www.manualscenter.com

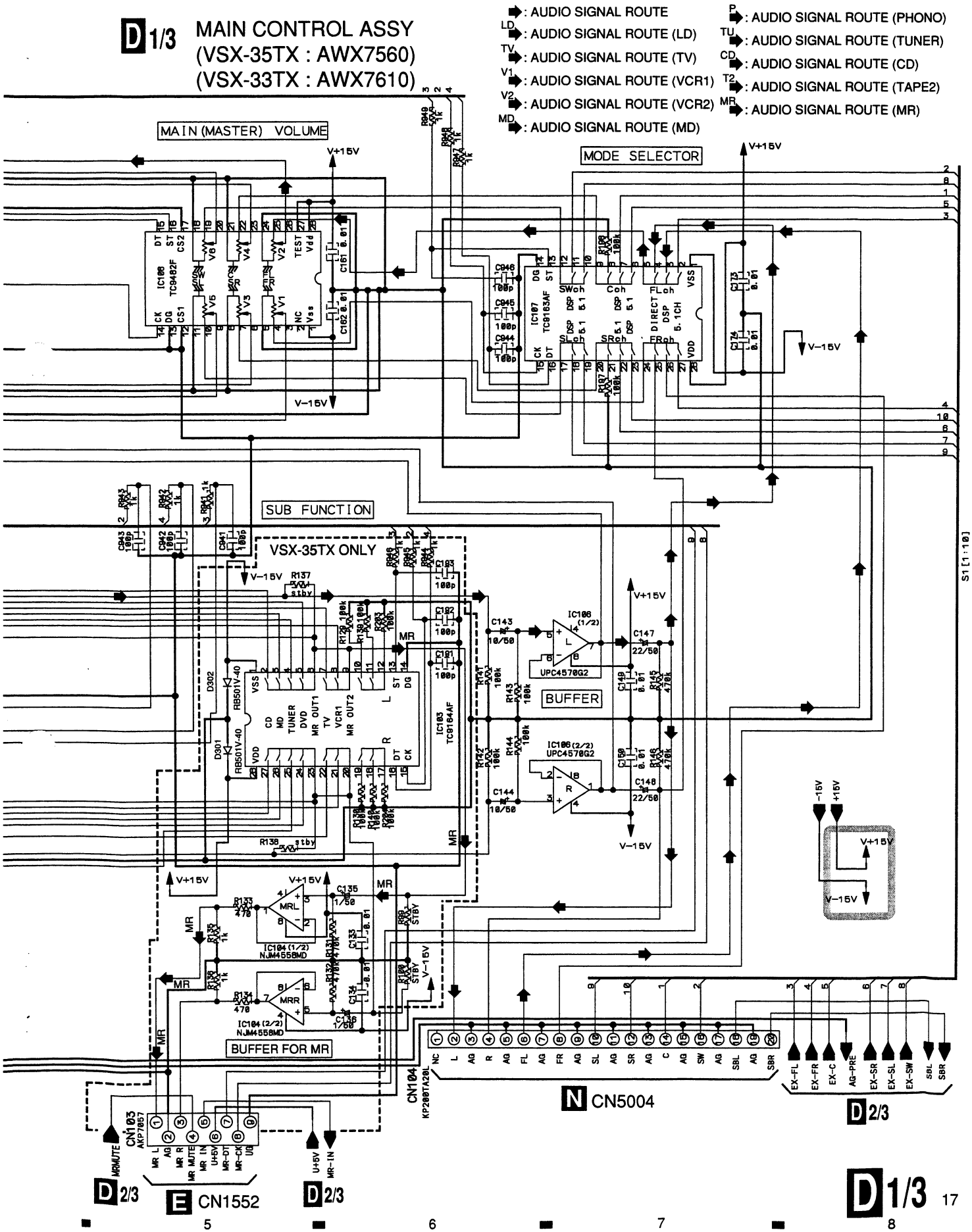

http://www.manualscenter.com

3.7 MAIN CONTROL ASSY (2/3)

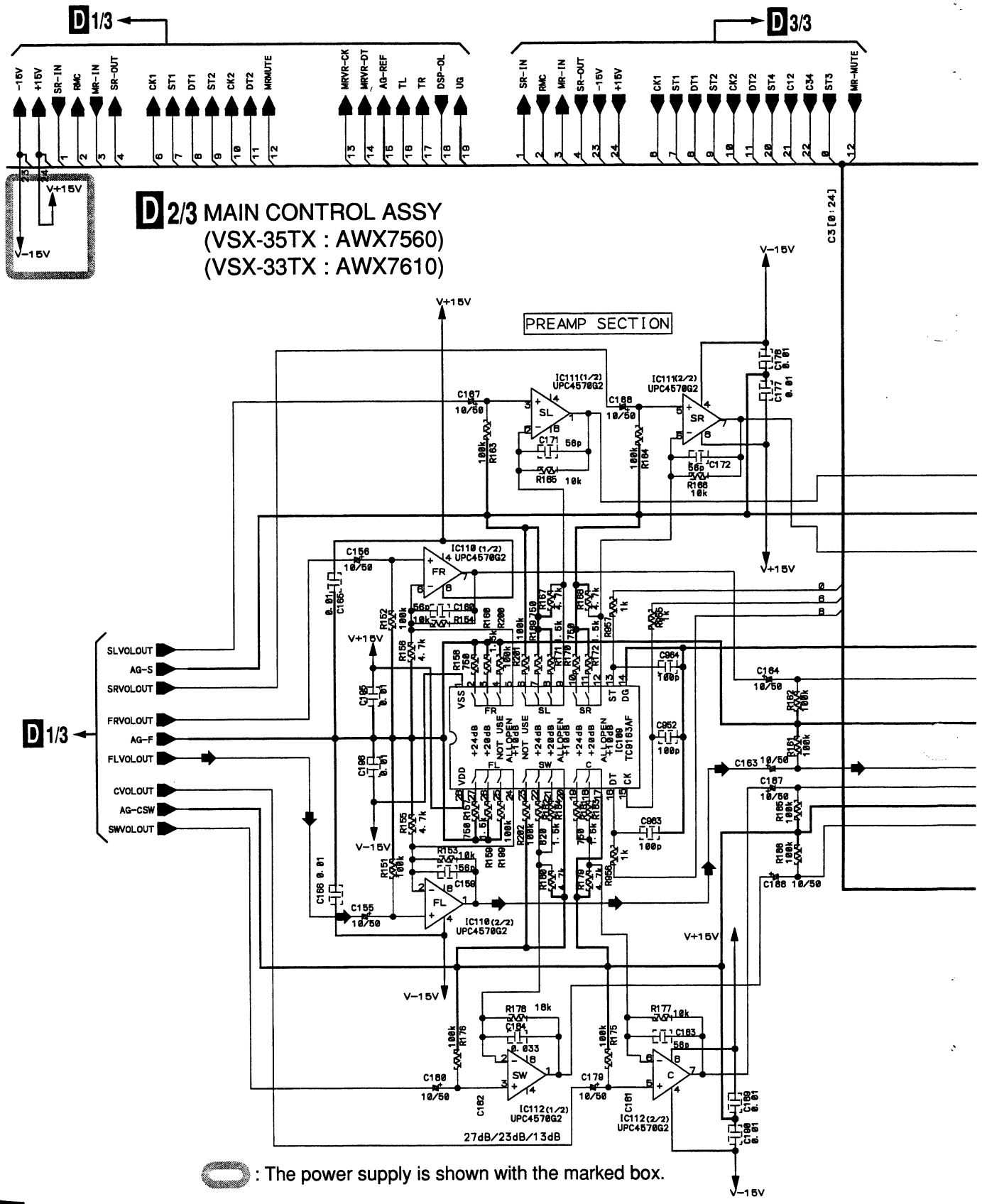

: The power supply is shown with the marked box.

http://www.manualscenter.com

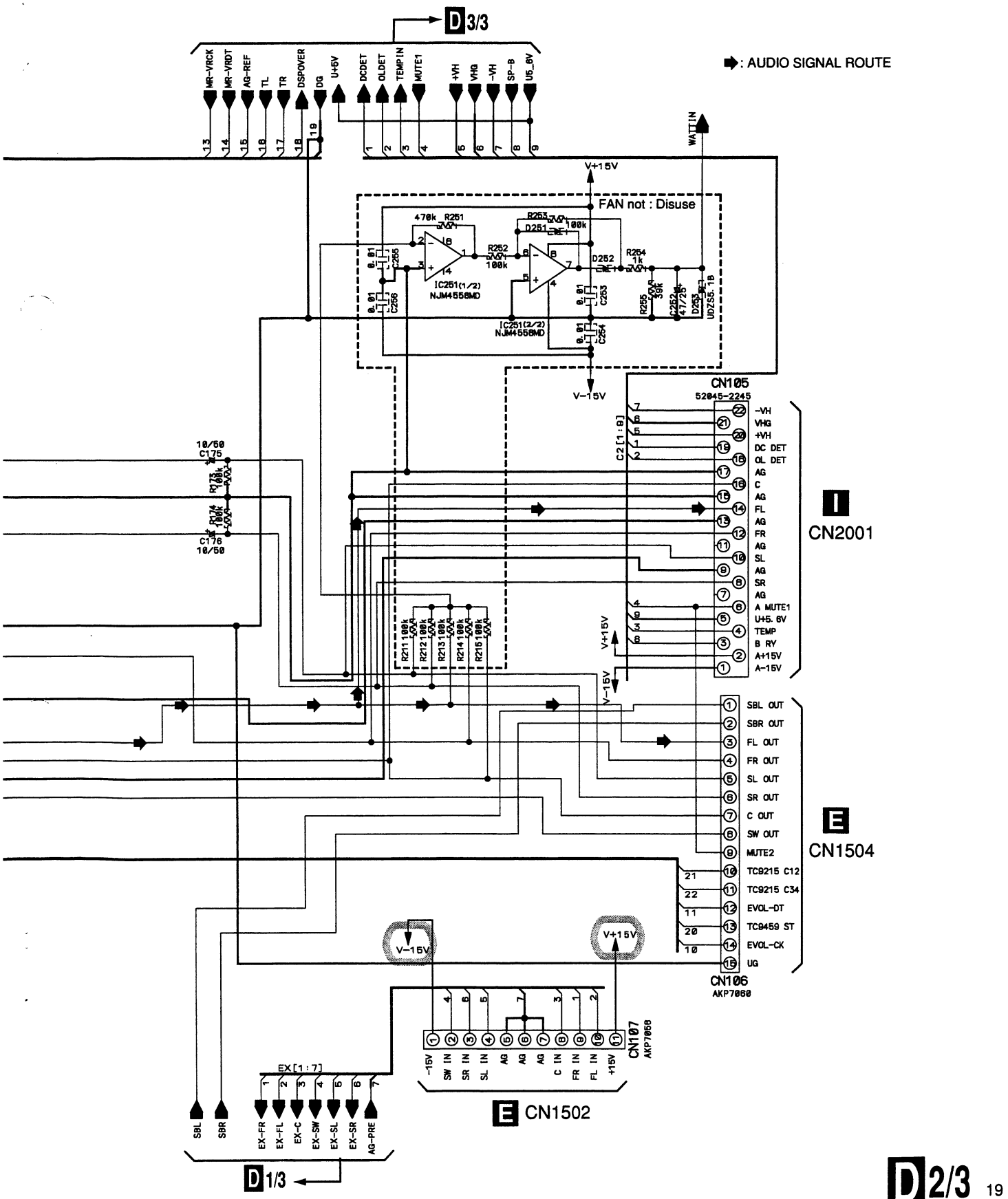

http://www.manualscenter.com

3.8 MAIN CONTROL ASSY (3/3)

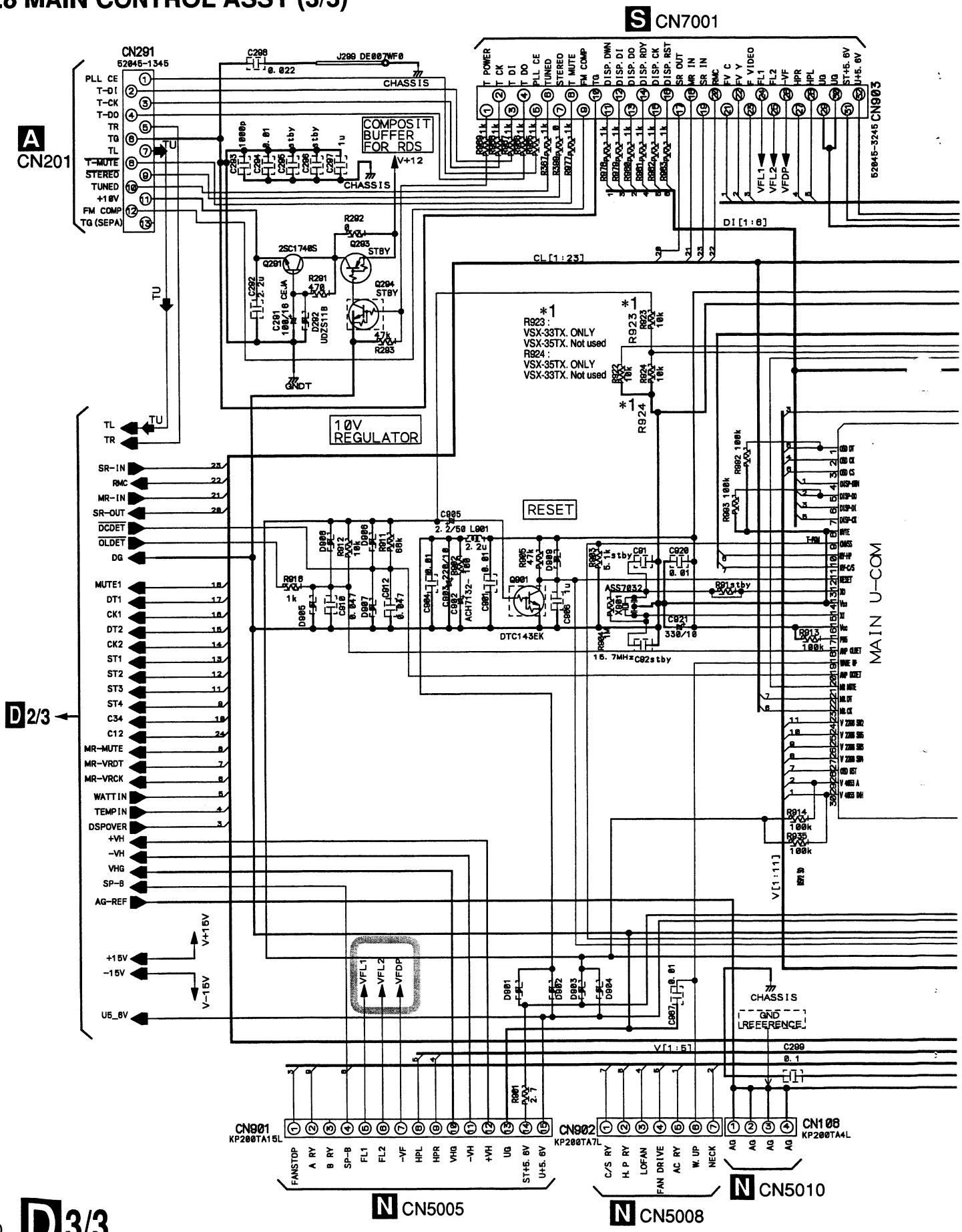

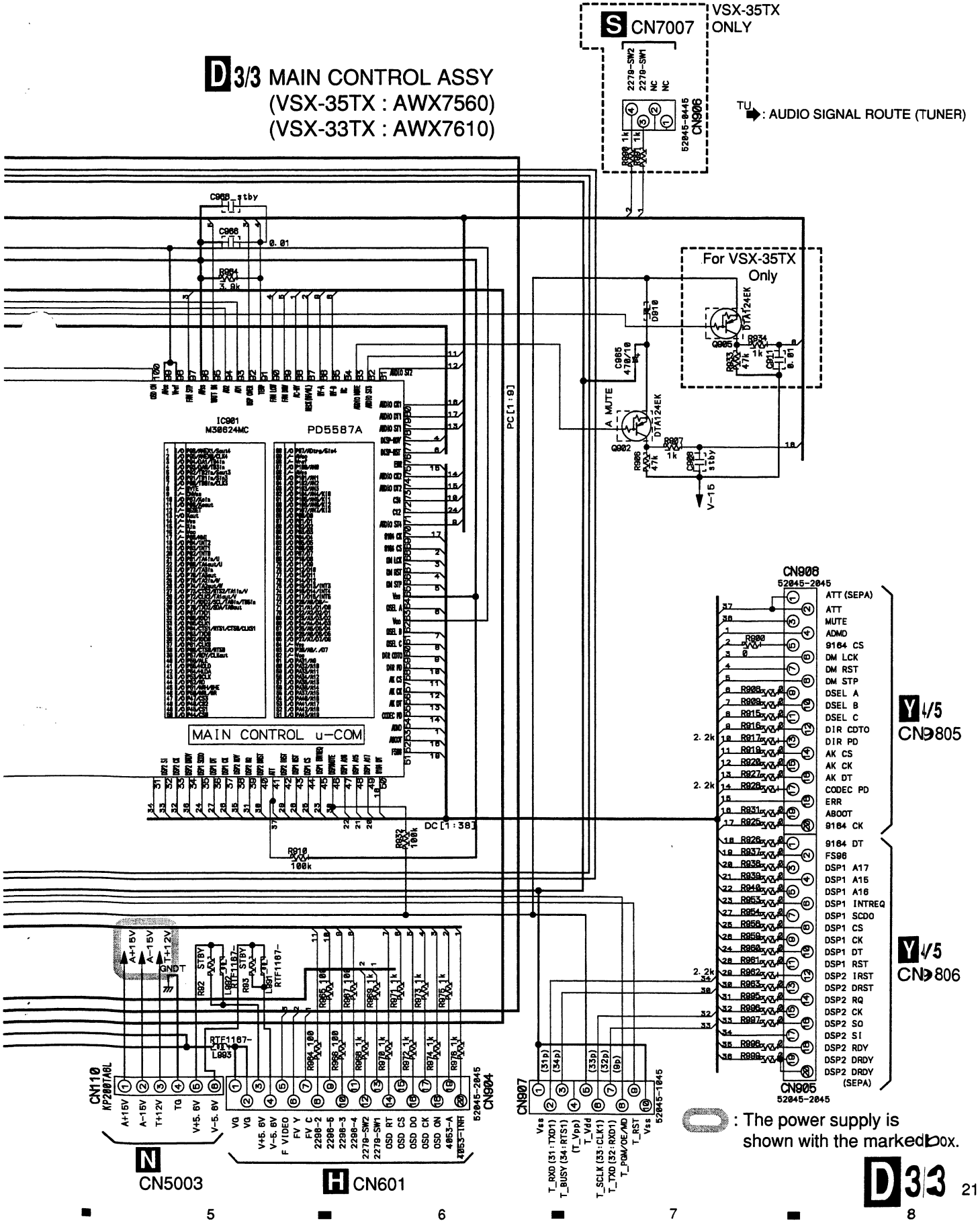
D 3/3 MAIN CONTROL ASSY
(VSX-35TX : AWX7560)
(VSX-33TX : AWX7610)
S CN7007
VSX-35TX ONLY
TU : AUDIO SIGNAL ROUTE (TUNER)
For VSX-35TX Only
IC901
M38624MC
PD5587A
MAIN CONTROL u-COM
A MUTE
CN908
52045-2045
Y 4/5
CN805
Y 4/5
CN806
CN905
52045-2045
CN110
KP200TA8L
N
CN5003
H CN601
CN904
52045-2045
CN907
52045-1045
: The power supply is shown with the marked box.
D 3/3
21

http://www.manualscenter.com

3.9 A-CONNECTION ASSY

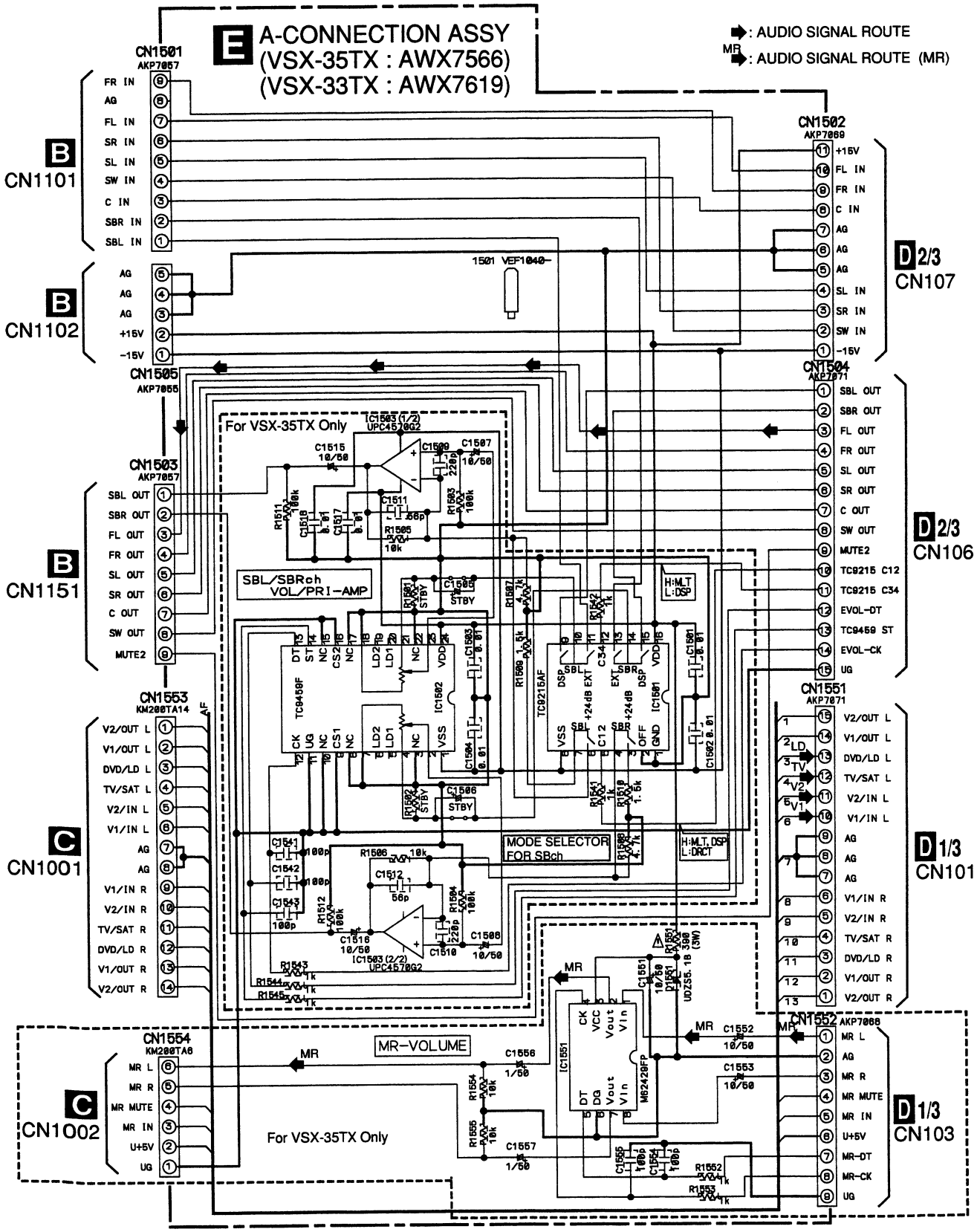

http://www.manualscenter.com

3.10 COMPOSITE ASSY

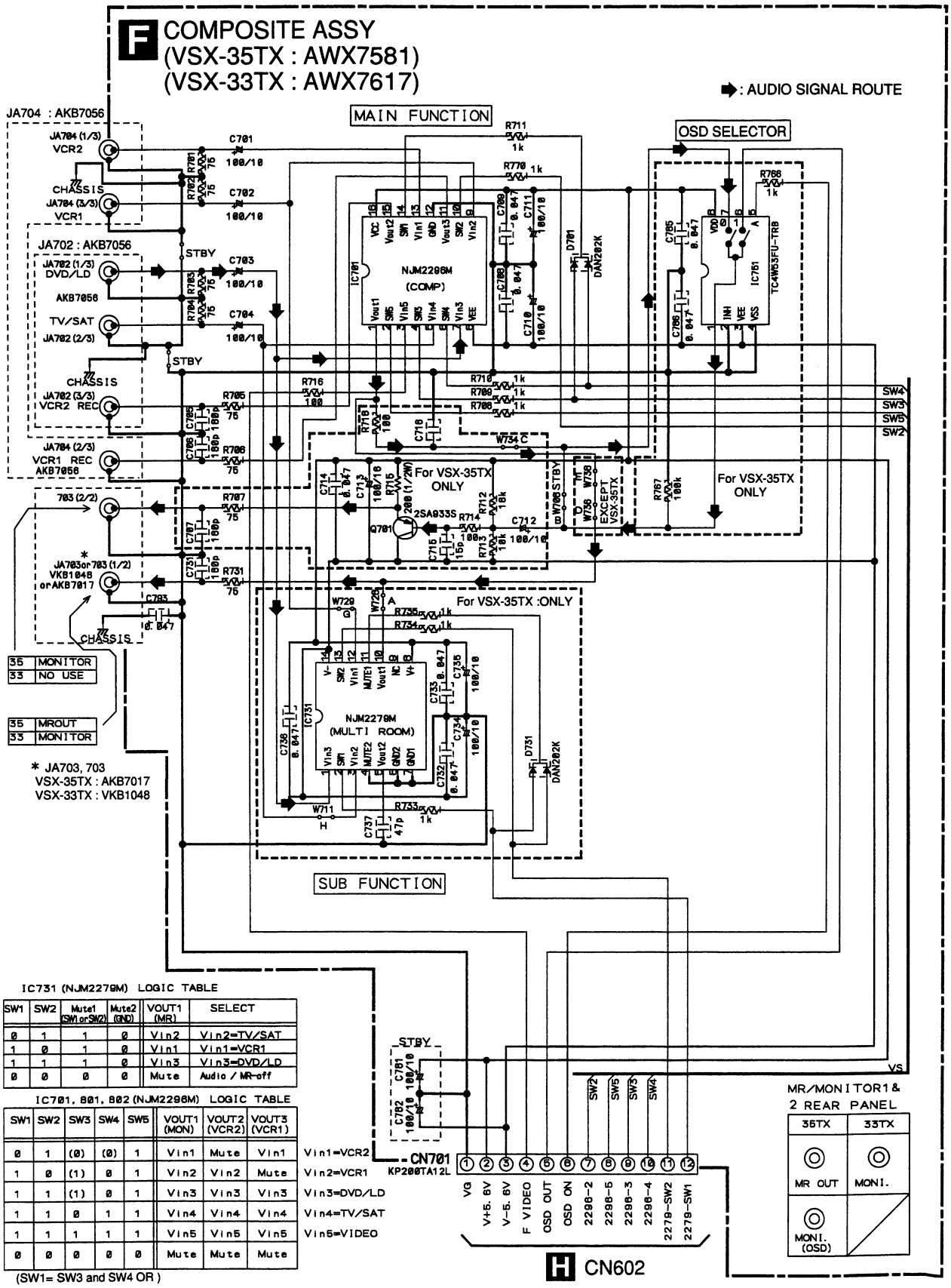

35	MONITOR
33	NO USE

35	MROUT
33	MONITOR

IC731 (NJM2279M) LOGIC TABLE

SW1	SW2	Mute1 (SW1 or SW2)	Mute2 (GND)	VOUT1 (MR)	SELECT
0	1	1	0	Vin2	Vin2=TV/SAT
1	0	1	0	Vin1	Vin1=VCR1
1	1	1	0	Vin3	Vin3=DVD/LD
0	0	0	0	Mute	Audio / MR-off

IC701, 801, 802 (NJM2296M) LOGIC TABLE

SW1	SW2	SW3	SW4	SW5	VOUT1 (MON)	VOUT2 (VCR2)	VOUT3 (VCR1)	
0	1	(0)	(0)	1	Vin1	Mute	Vin1	Vin1=VCR2
1	0	(1)	0	1	Vin2	Vin2	Mute	Vin2=VCR1
1	1	(1)	0	1	Vin3	Vin3	Vin3	Vin3=DVD/LD
1	1	0	1	1	Vin4	Vin4	Vin4	Vin4=TV/SAT
1	1	1	1	1	Vin5	Vin5	Vin5	Vin5=VIDEO
0	0	0	0	0	Mute	Mute	Mute	

(SW1= SW3 and SW4 OR)

http://www.manualscenter.com

3.11 S VIDEO and V-CONNECTION ASSYS

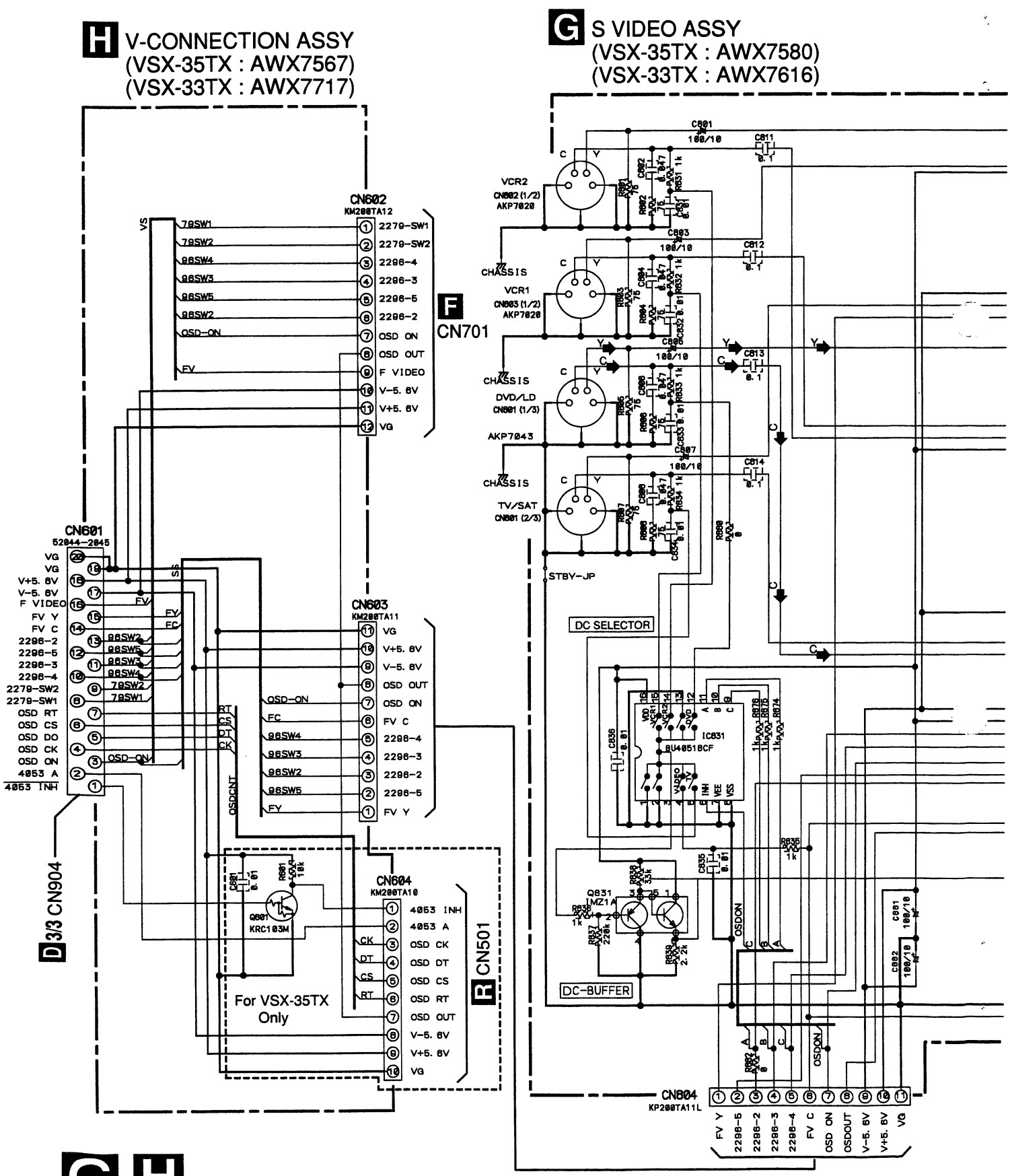

http://www.manualscenter.com

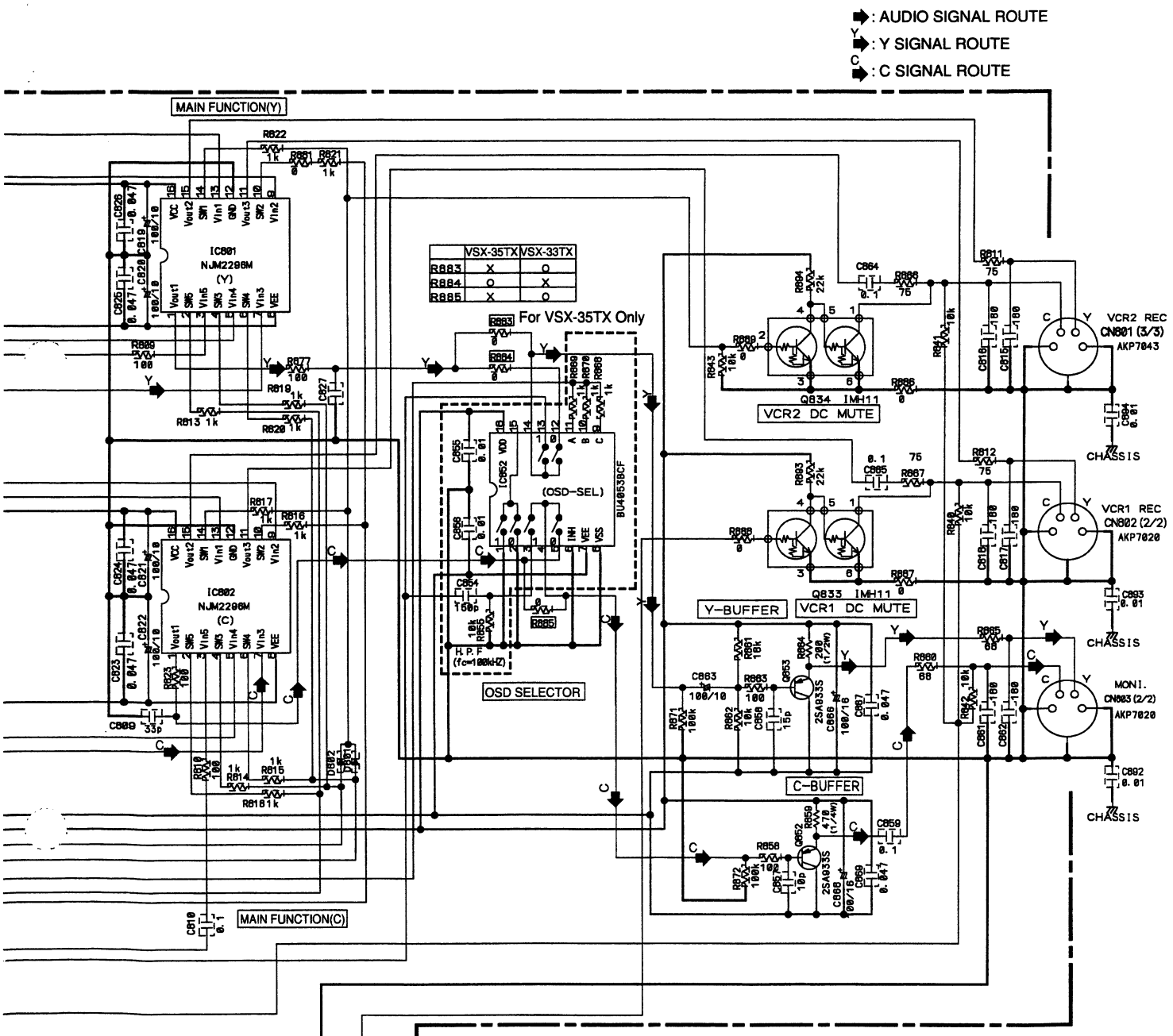

	VSX-35TX	VSX-33TX
R883	X	O
R884	O	X
R885	X	O

TABLE IC801, 802 (NJM2296M)

SW1	SW2	SW3	SW4	SW5	VOUT1 (MON)	VOUT2 (VCR2)	VOUT3 (VCR1)	
0	1	(0)	(0)	1	Vin1	Mute	Vin1	Vin1=VCR2
1	0	(1)	0	1	Vin2	Vin2	Mute	Vin2=VCR1
1	1	(1)	0	1	Vin3	Vin3	Vin3	Vin3=DVD/LD
1	1	0	1	1	Vin4	Vin4	Vin4	Vin4=TV/SAT
1	1	1	1	1	Vin5	Vin5	Vin5	Vin5=VIDEO
0	0	0	0	0	Mute	Mute	Mute	AUDIO FUNC.

(SW1 =SW3*SW4)

TABLE IC831 (BU4051BCF)

A (SW2)	B (SW3)	C (SW4)	INH	OUT	
0	0	0	0	AUDIO	13p
1	0	0	0	VCR2	14p
0	1	0	0	VCR1	15p
1	1	0	0	DVD/LD	12p
0	0	1	0		1p
1	0	1	0	TV/SAT	5p
0	1	1	0		2p
1	1	1	0	FV	4p
*	*	*	1		

http://www.manualscenter.com

3.12 V-AMP ASSY

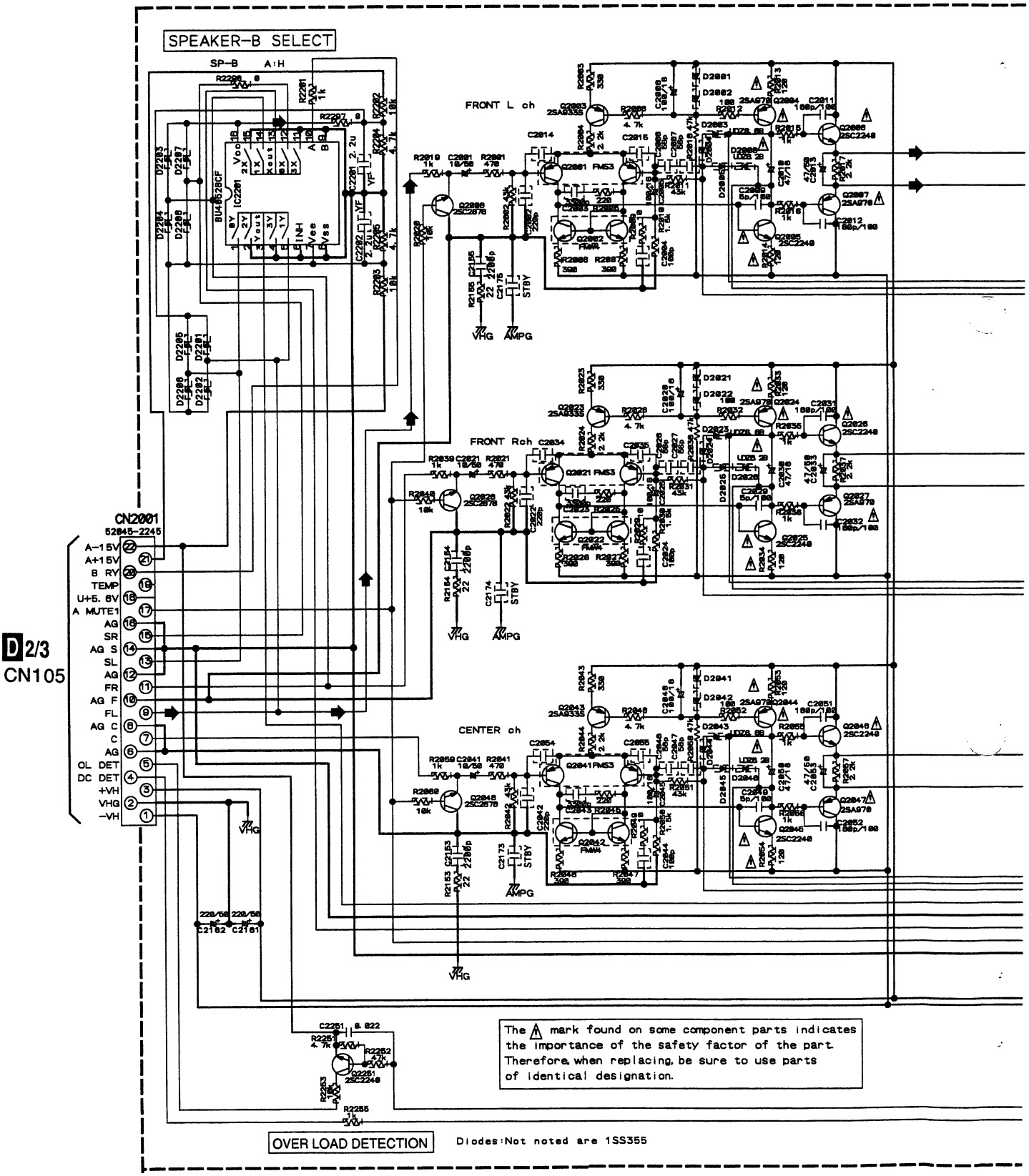

http://www.manualscenter.com

A

I V-AMP ASSY (AWX7578)

POWER AMP VOLTAGE AMPLIFYING STAGE

➡: AUDIO SIGNAL ROUTE

- NO MARK DIODE: 1SS355
- RESISTOR: 1/4W, J%
- NO MARK ELECTROLYTIC CAPACITOR: CEAS
  JA: CEJA
- NON ELECTROLYTICAL CAPACITOR: CCCCH TYPE

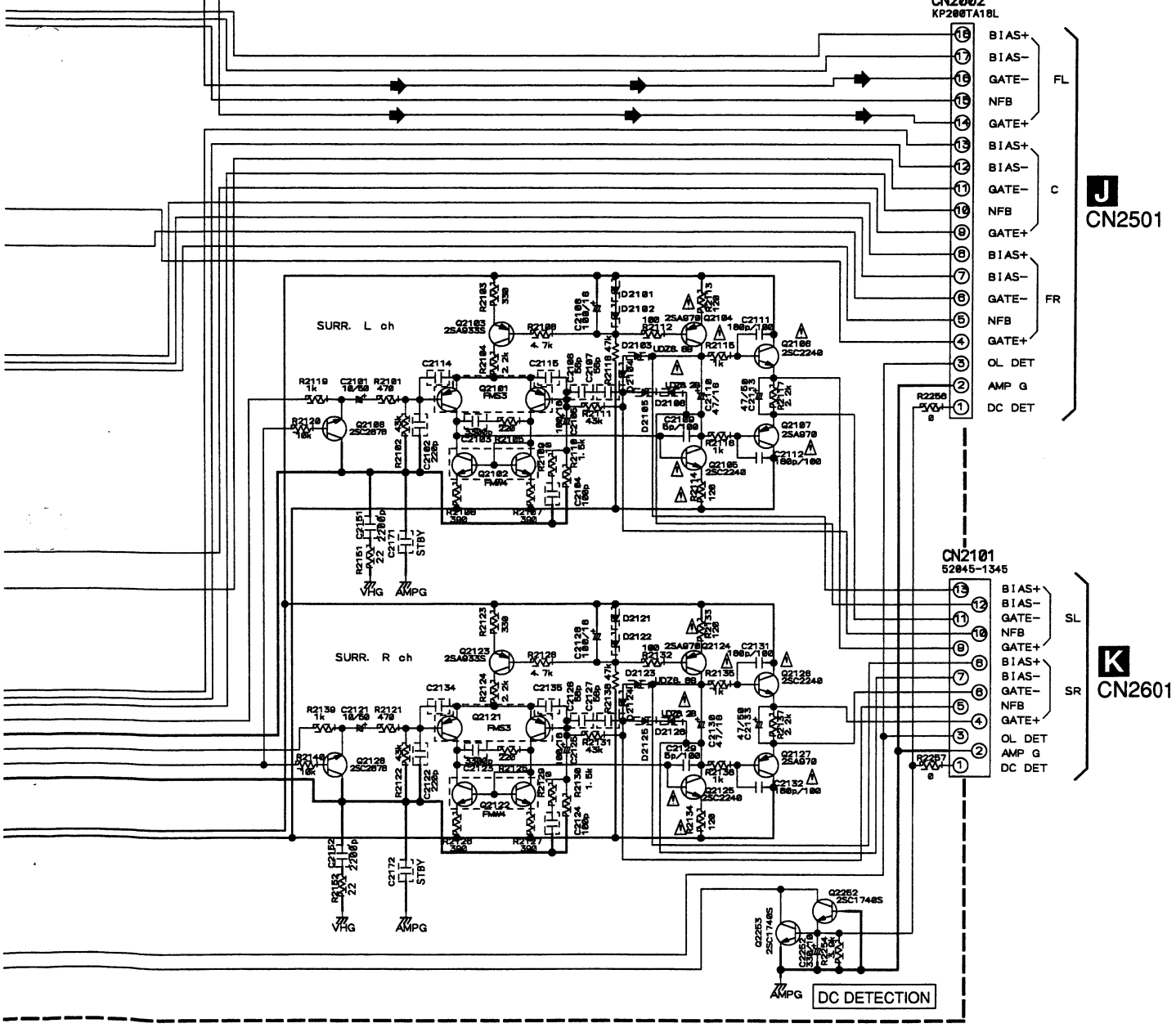

B

C

D

http://www.manualscenter.com

3.13 FRONT AMP and REAR AMP ASSYS

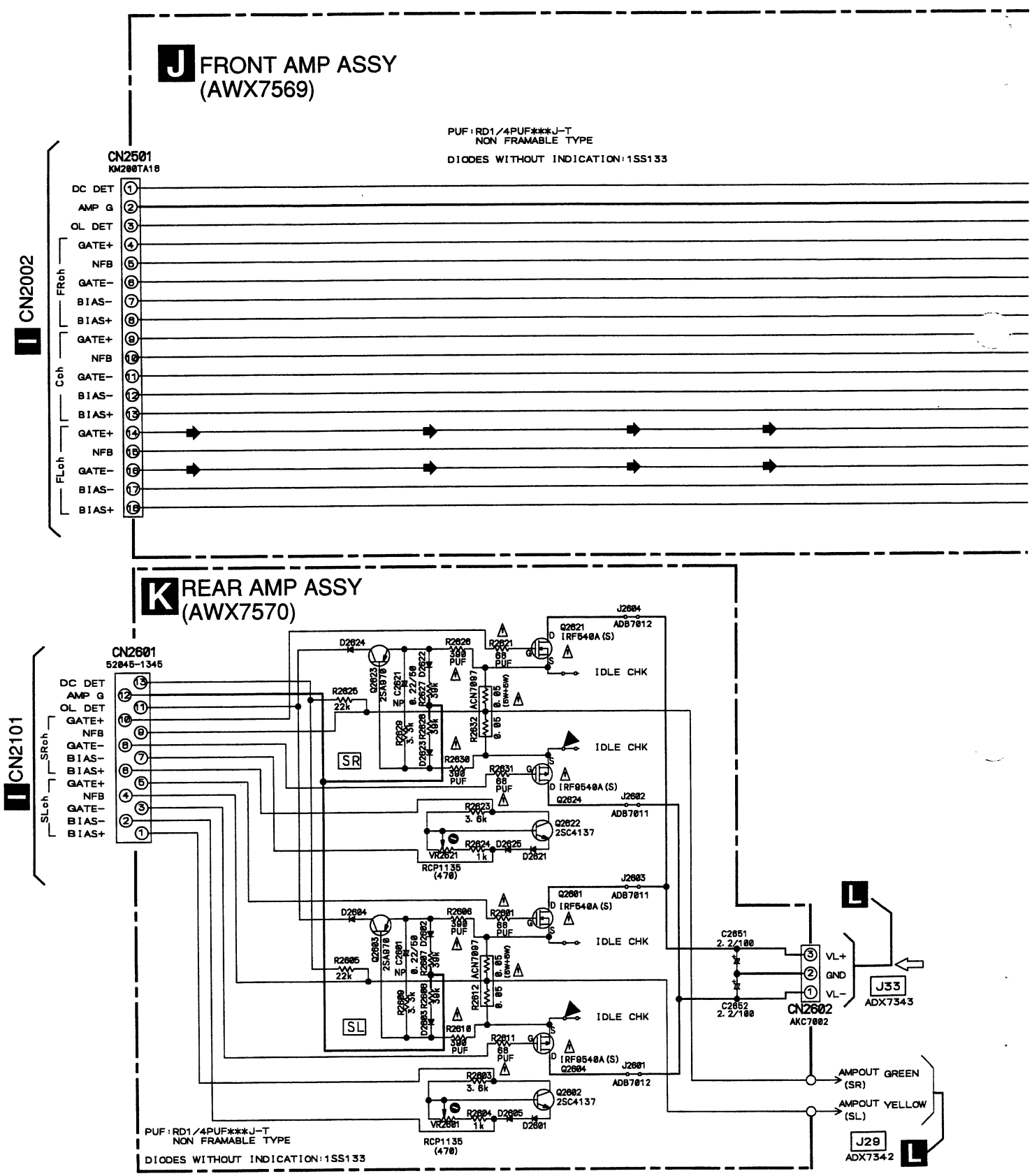

http://www.manualscenter.com

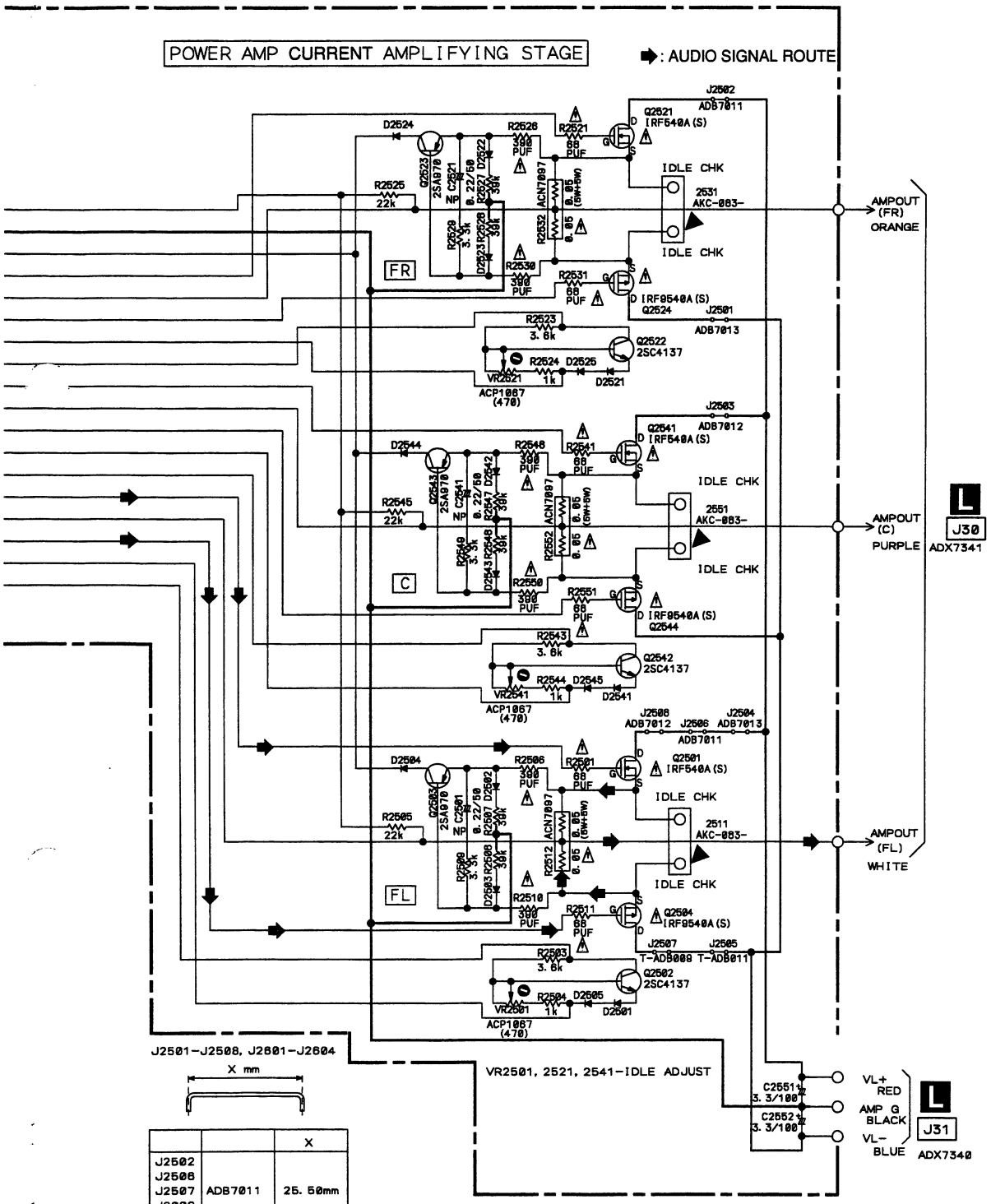

		X
J2502 J2506 J2507 J2602 J2603	ADB7011	25.50mm
J2503 J2508	ADB7012	58.00mm
J2501 J2504 J2505 J2601 J2604	ADB7013	70.00mm

The ⚠ mark found on some component parts indicates the importance of the safety factor of the part. Therefore, when replacing, be sure to use parts of identical designation.

http://www.manualscenter.com

3.14 SP/PS and TRANS 2-1 ASSYS

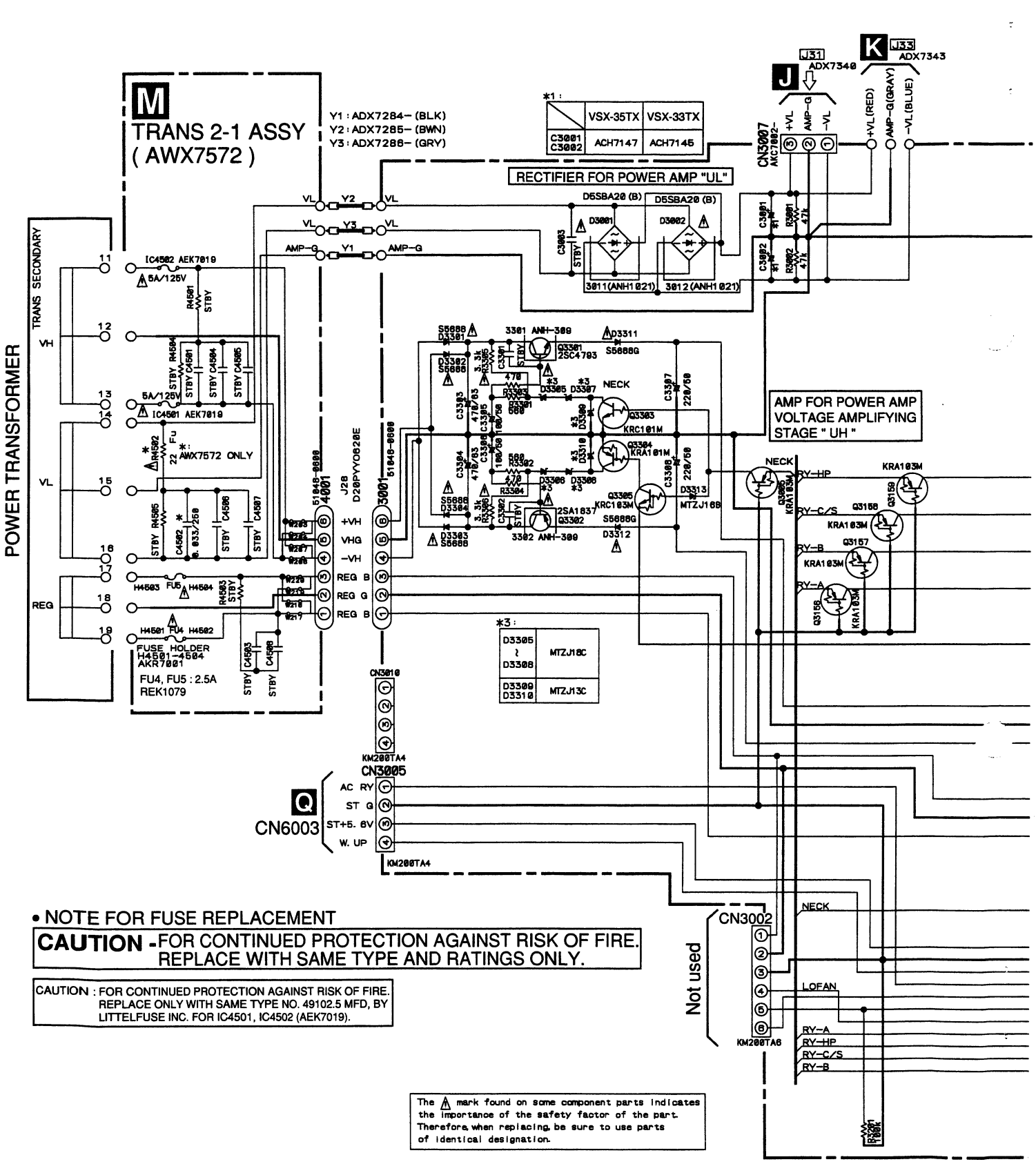

• NOTE FOR FUSE REPLACEMENT

CAUTION -FOR CONTINUED PROTECTION AGAINST RISK OF FIRE. REPLACE WITH SAME TYPE AND RATINGS ONLY.

CAUTION : FOR CONTINUED PROTECTION AGAINST RISK OF FIRE. REPLACE ONLY WITH SAME TYPE NO. 49102.5 MFD, BY LITTELFUSE INC. FOR IC4501, IC4502 (AEK7019).

The ⚠ mark found on some component parts indicates the importance of the safety factor of the part. Therefore, when replacing, be sure to use parts of identical designation.

http://www.manualscenter.com

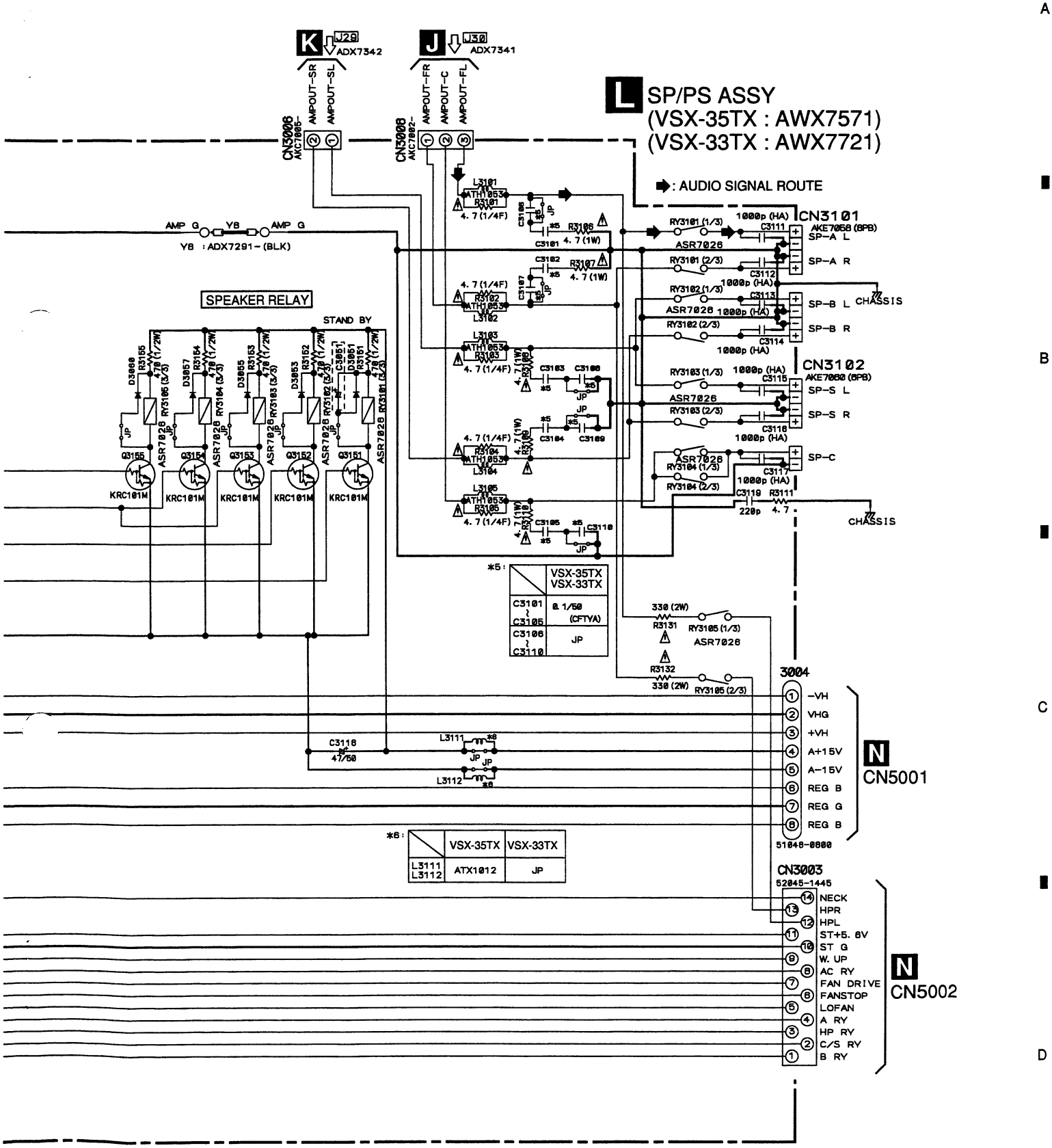

http://www.manualscenter.com

3.15 REGULATOR, TRANS 2-2 and TRANS 1 ASSYS

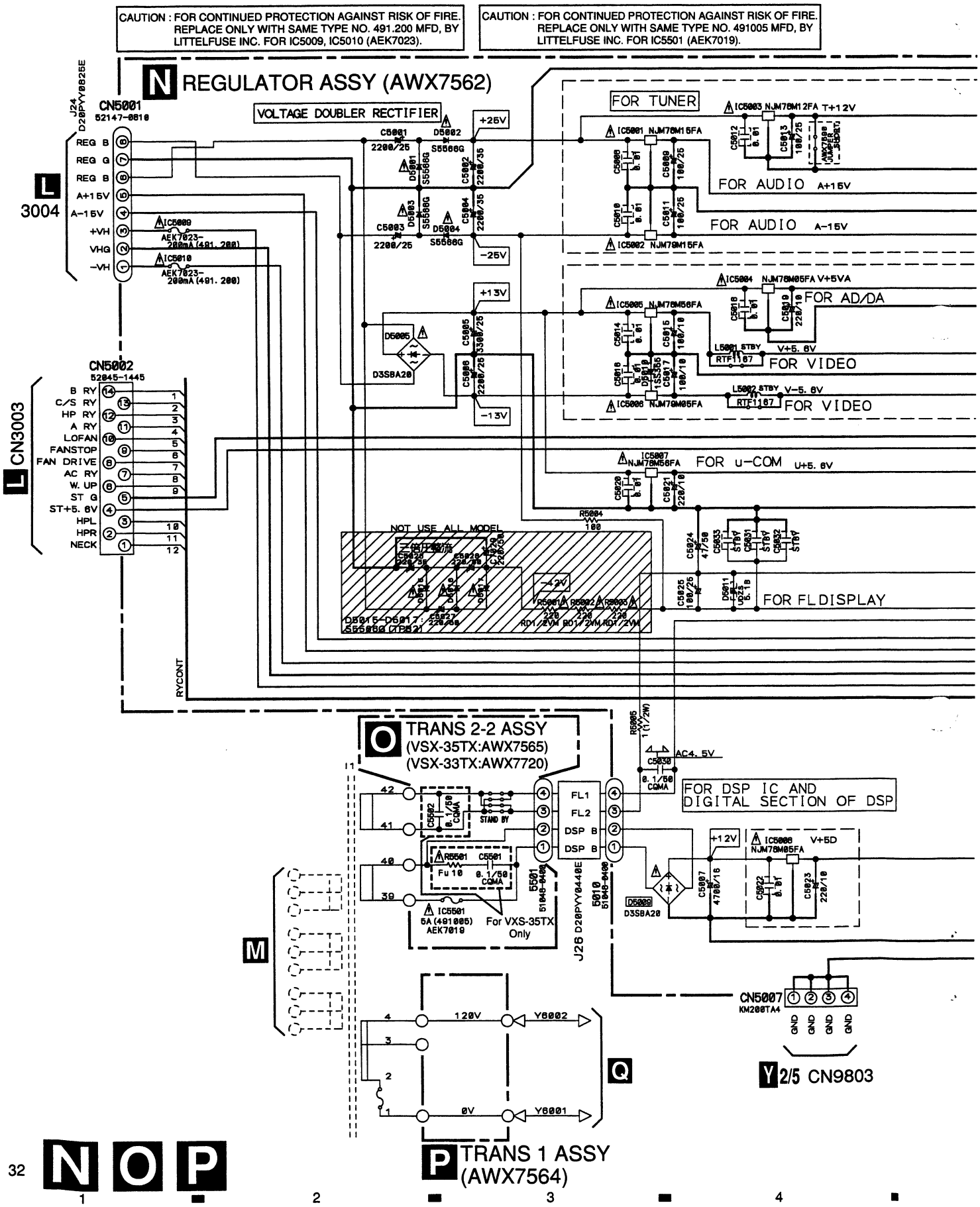

http://www.manualscenter.com

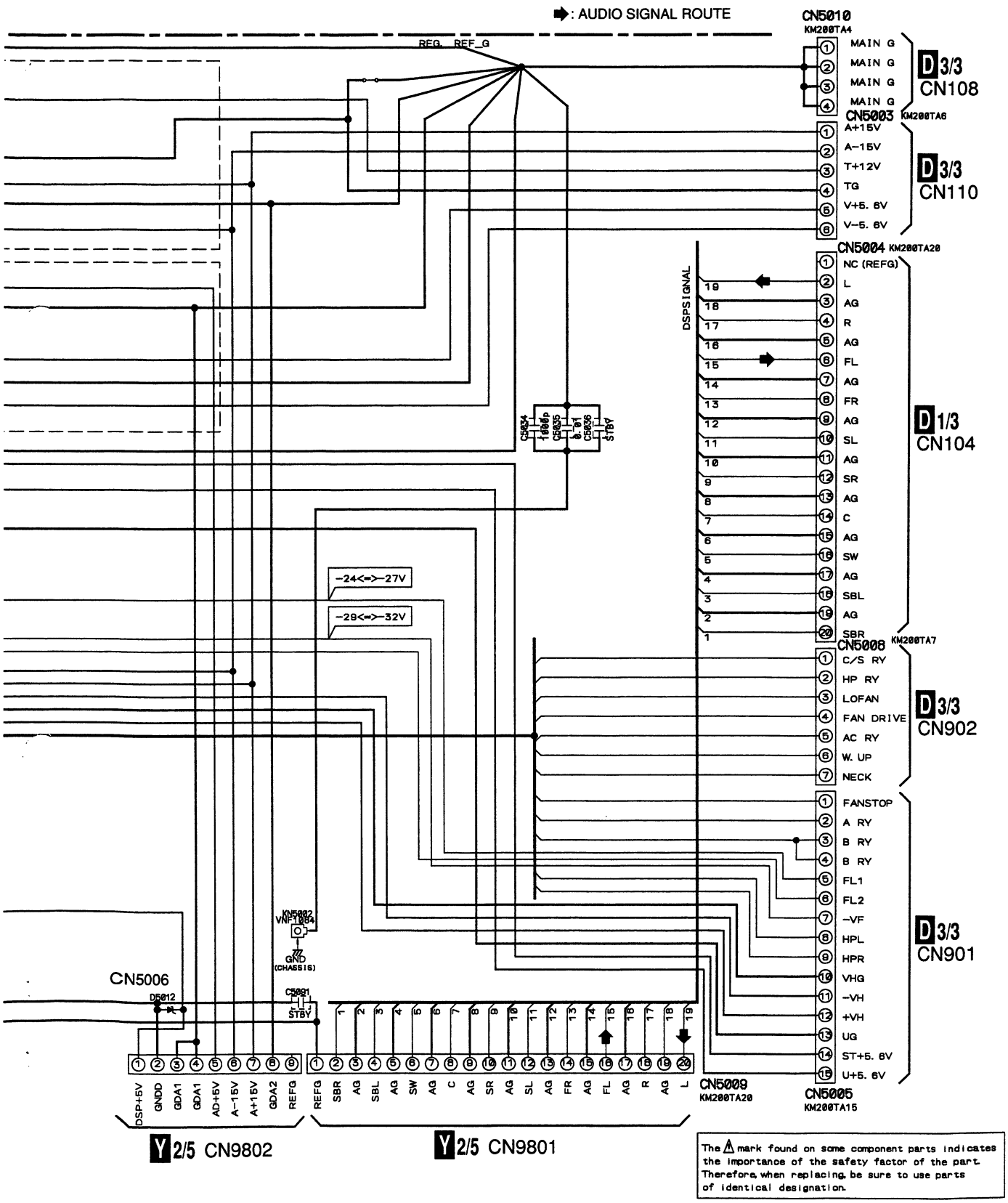

The ⚠ mark found on some component parts indicates the importance of the safety factor of the part. Therefore, when replacing, be sure to use parts of identical designation.

http://www.manualscenter.com

3.16 PRIMARY ASSY

Q PRIMARY ASSY (AWX7563)

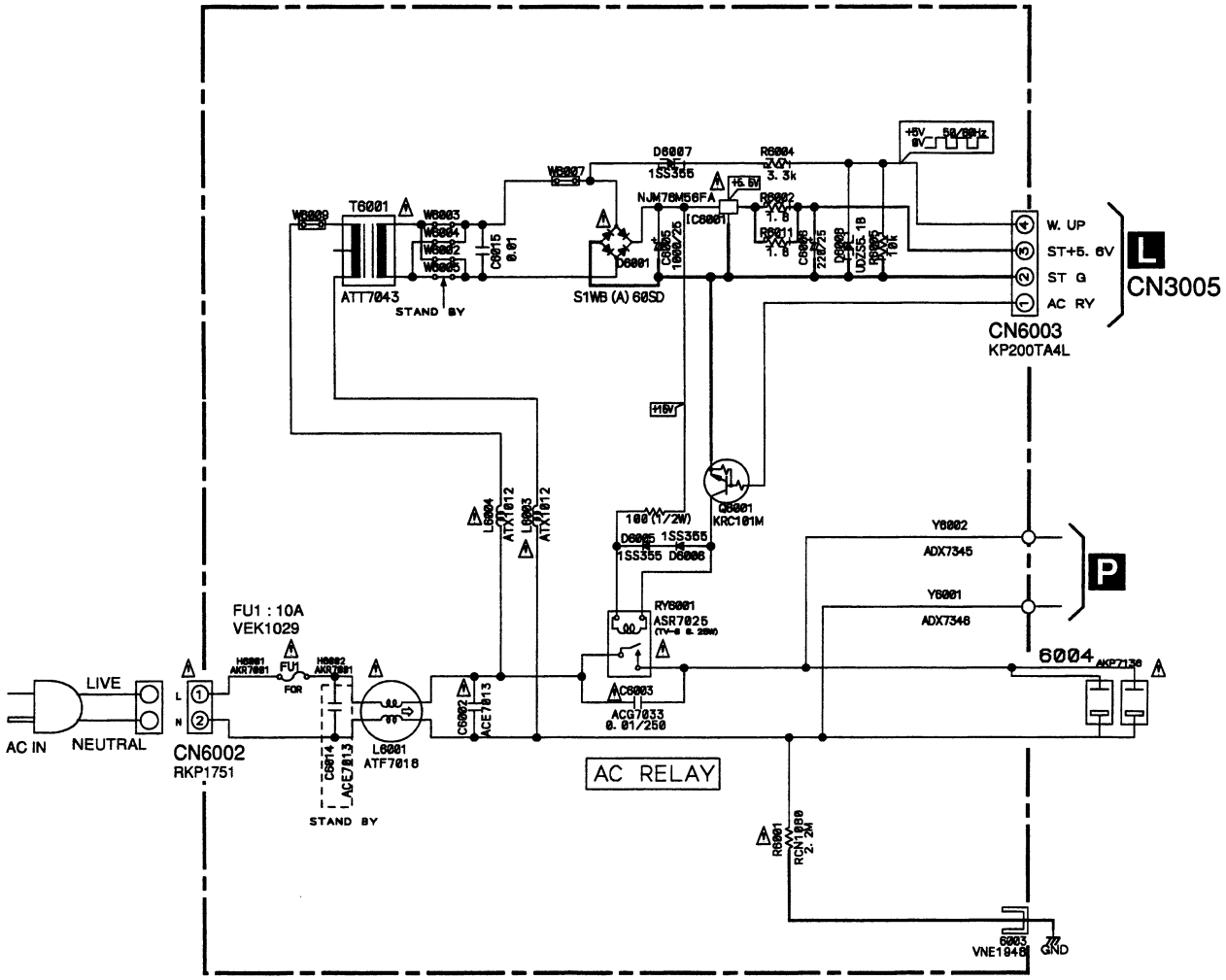

The ⚠ mark found on some component parts indicates the importance of the safety factor of the part. Therefore, when replacing, be sure to use parts of identical designation.

• NOTE FOR FUSE REPLACEMENT

CAUTION -FOR CONTINUED PROTECTION AGAINST RISK OF FIRE. REPLACE WITH SAME TYPE AND RATINGS ONLY.

http://www.manualscenter.com

3.17 COMPONENT ASSY (VSX-35TX ONLY)

R COMPONENT ASSY (AWX7582)

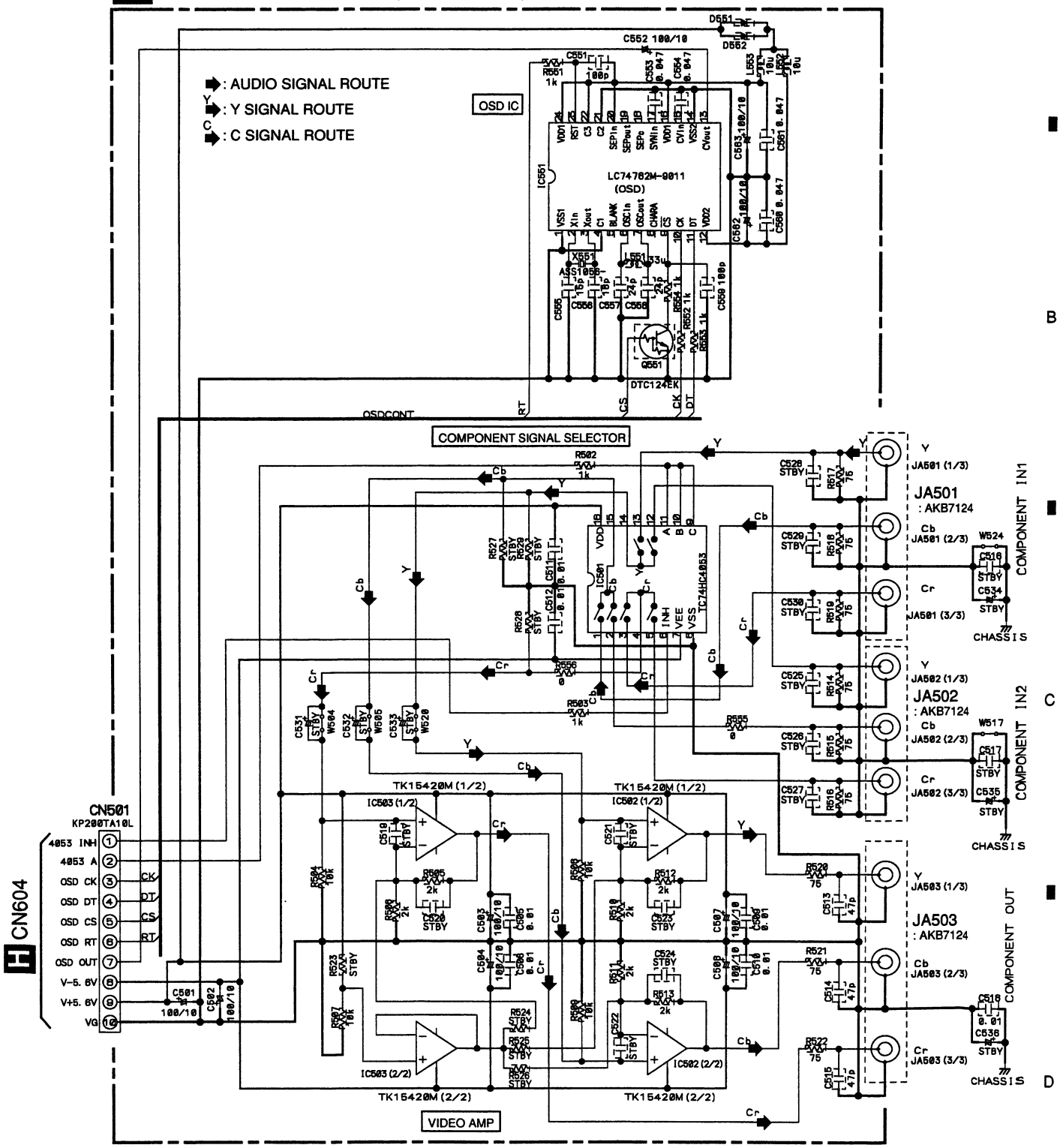

http://www.manualscenter.com

3.18 DISPLAY, VOLUME-CONT, HEADPHONE, FRONT AV and STAND BY ASSYS

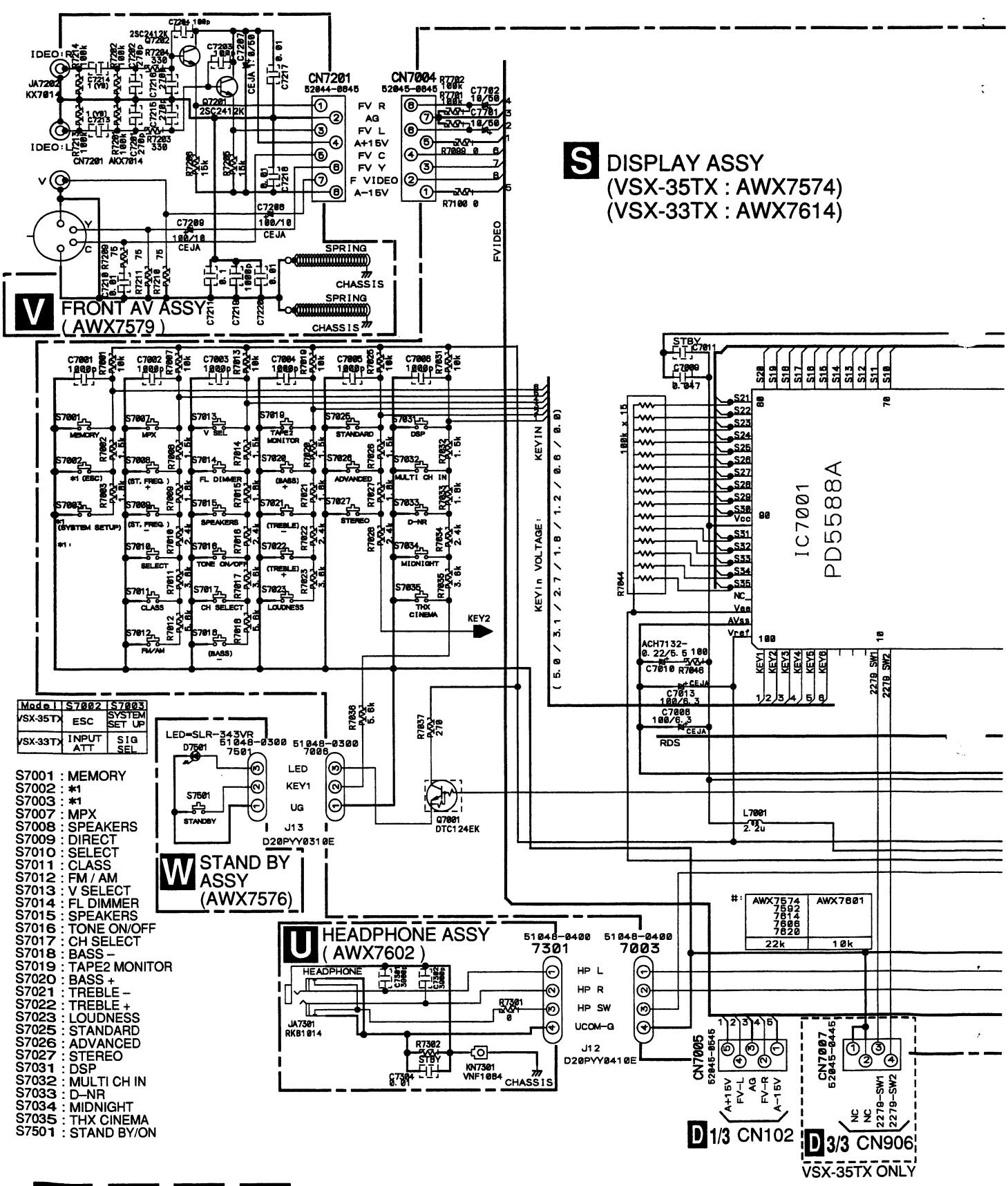

Model	S7002	S7003
VSX-35TX	ESC	SYSTEM SET UP
VSX-33TX	INPUT ATT	SIG SEL

http://www.manualscenter.com

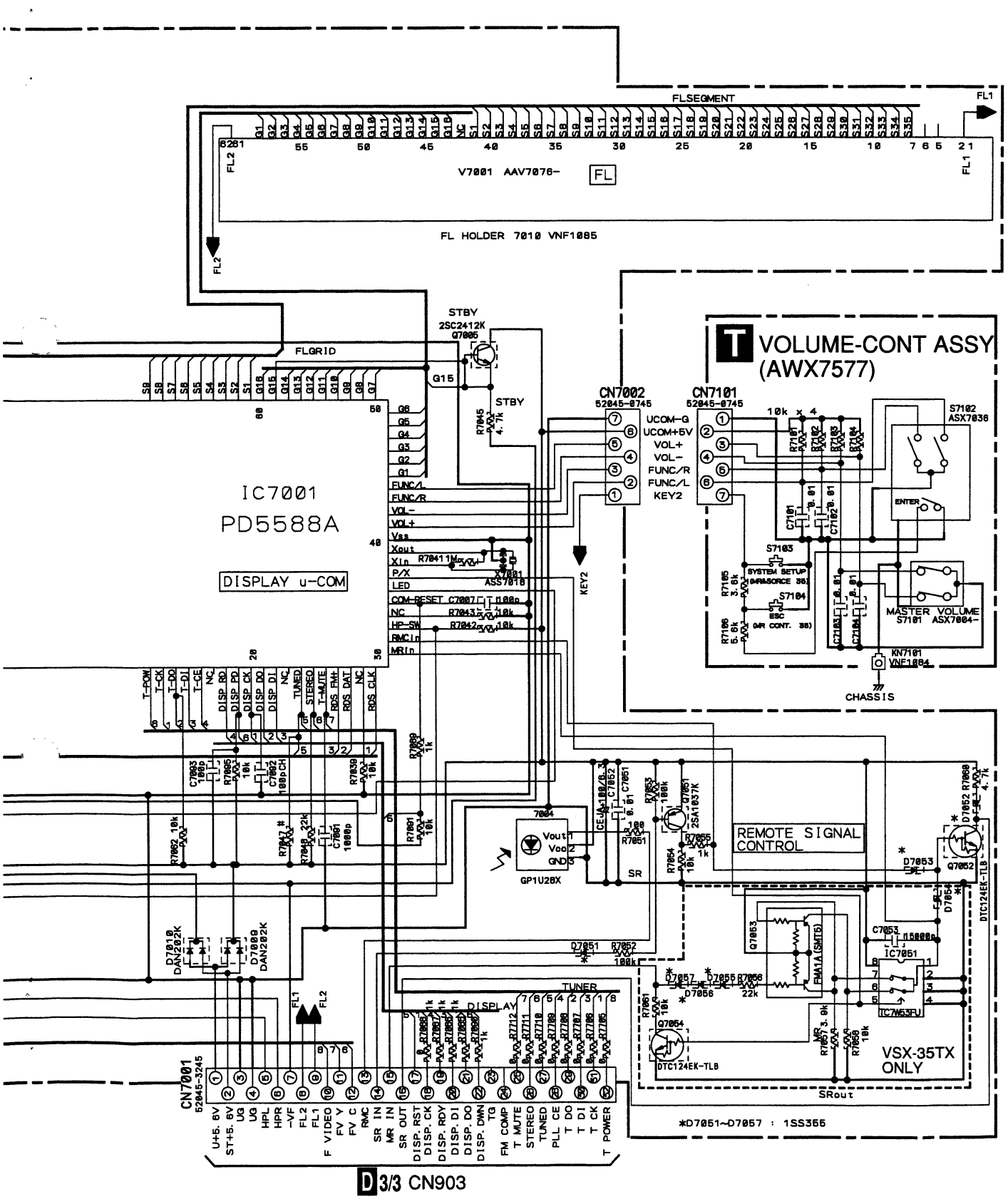

3.19 DSP ASSY (1/5)

http://www.manualscenter.com

Y 1/5 DSP ASSY
(VSX-35TX : AWX7561)(VSX-33TX : AWX7611)

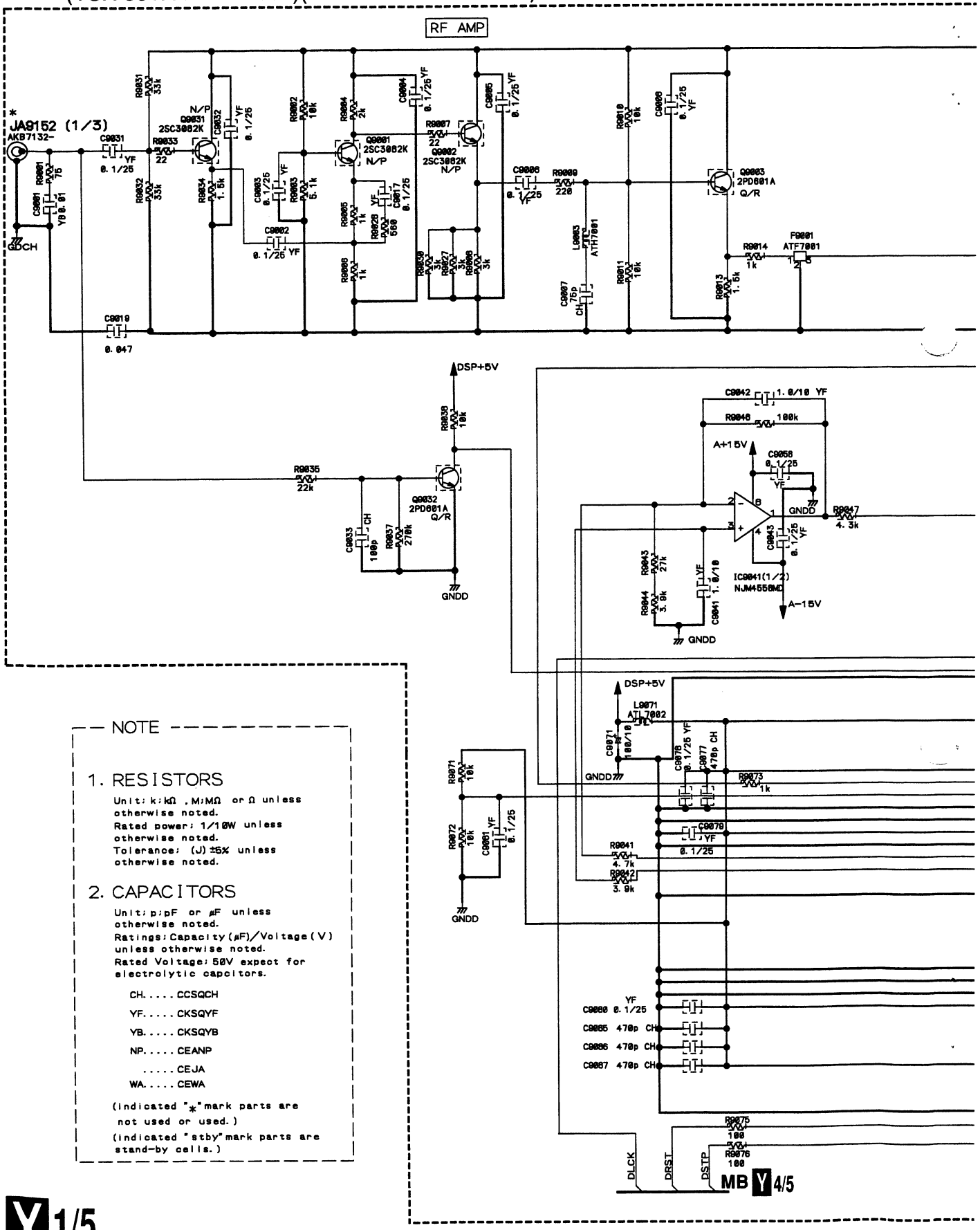

NOTE

1. RESISTORS
   Unit: k:kΩ , M:MΩ or Ω unless otherwise noted.
   Rated power: 1/10W unless otherwise noted.
   Tolerance: (J)±5% unless otherwise noted.

2. CAPACITORS
   Unit: p:pF or μF unless otherwise noted.
   Ratings: Capacity(μF)/Voltage(V) unless otherwise noted.
   Rated Voltage: 50V expect for electrolytic capcitors.

   CH..... CCSQCH
   YF..... CKSQYF
   YB..... CKSQYB
   NP..... CEANP
   ..... CEJA
   WA..... CEWA

   (indicated "*"mark parts are not used or used.)
   (indicated "stby"mark parts are stand-by cells.)

http://www.manualscenter.com

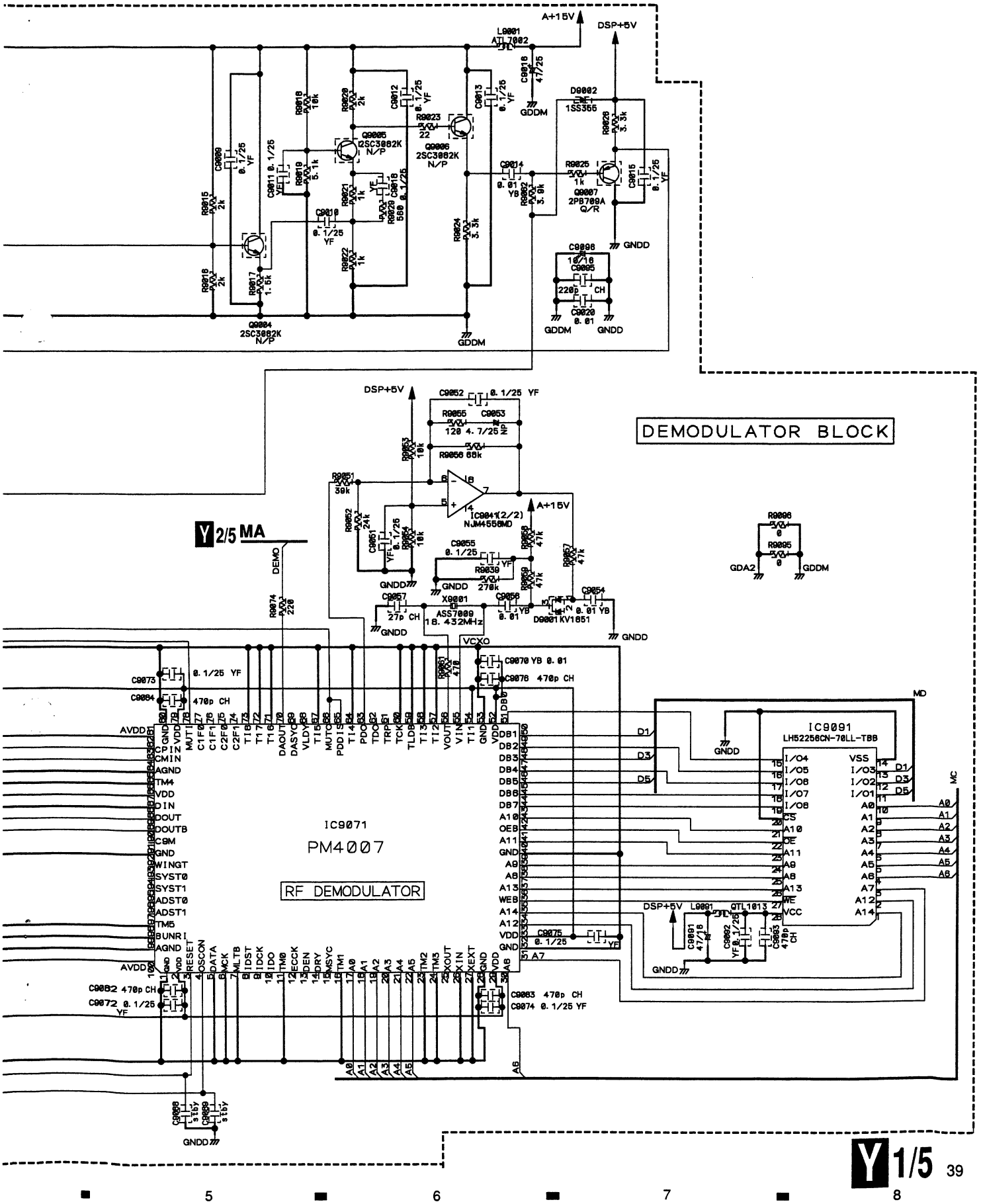

http://www.manualscenter.com

3.20 DSP (2/5) and FRONT DIGIN ASSYS

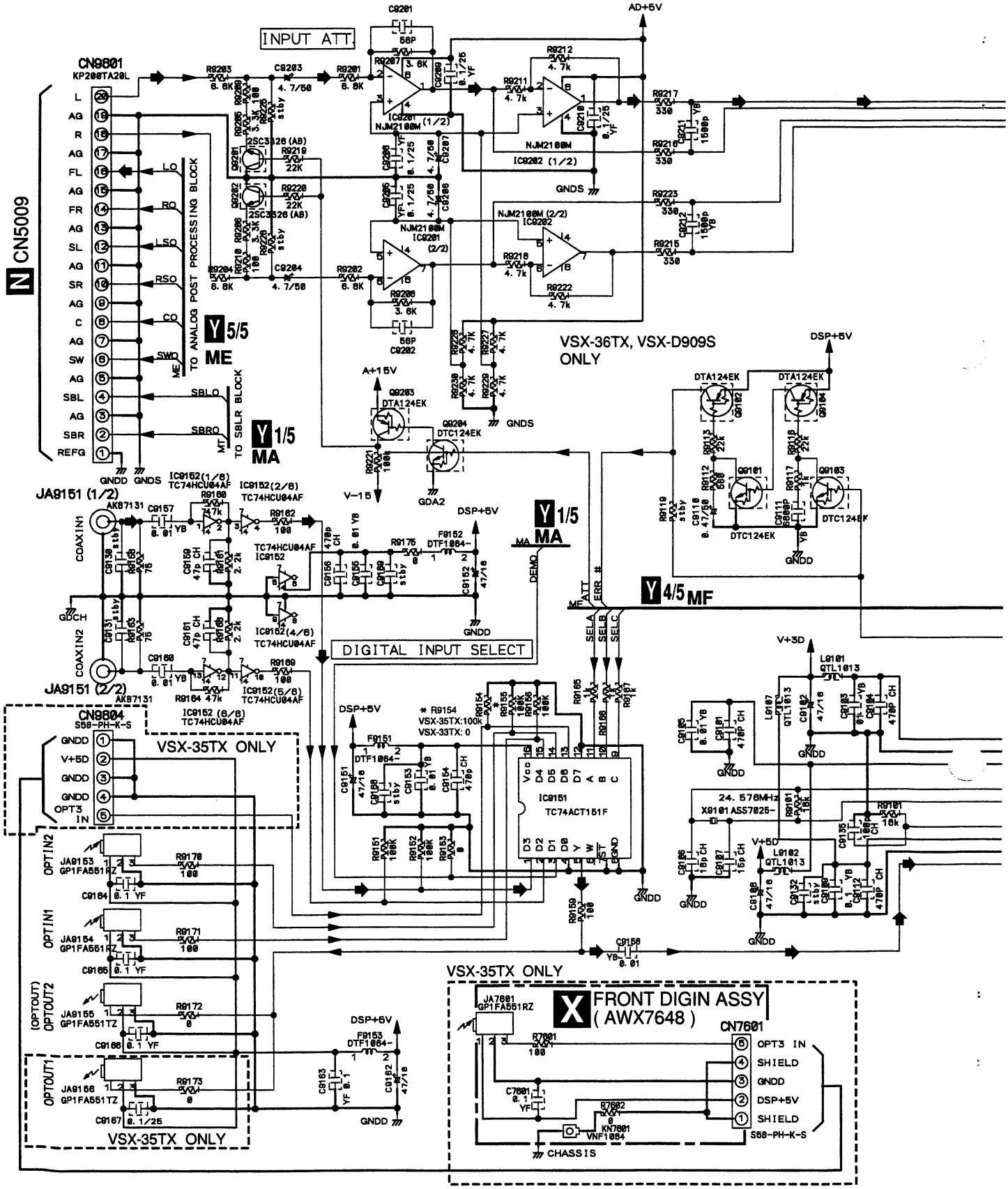

http://www.manualscenter.com

Y 2/5 DSP ASSY
(VSX-35TX : AWX7561)
(VSX-33TX : AWX7611)

➡: AUDIO SIGNAL ROUTE

: The power supply is shown with the marked box.

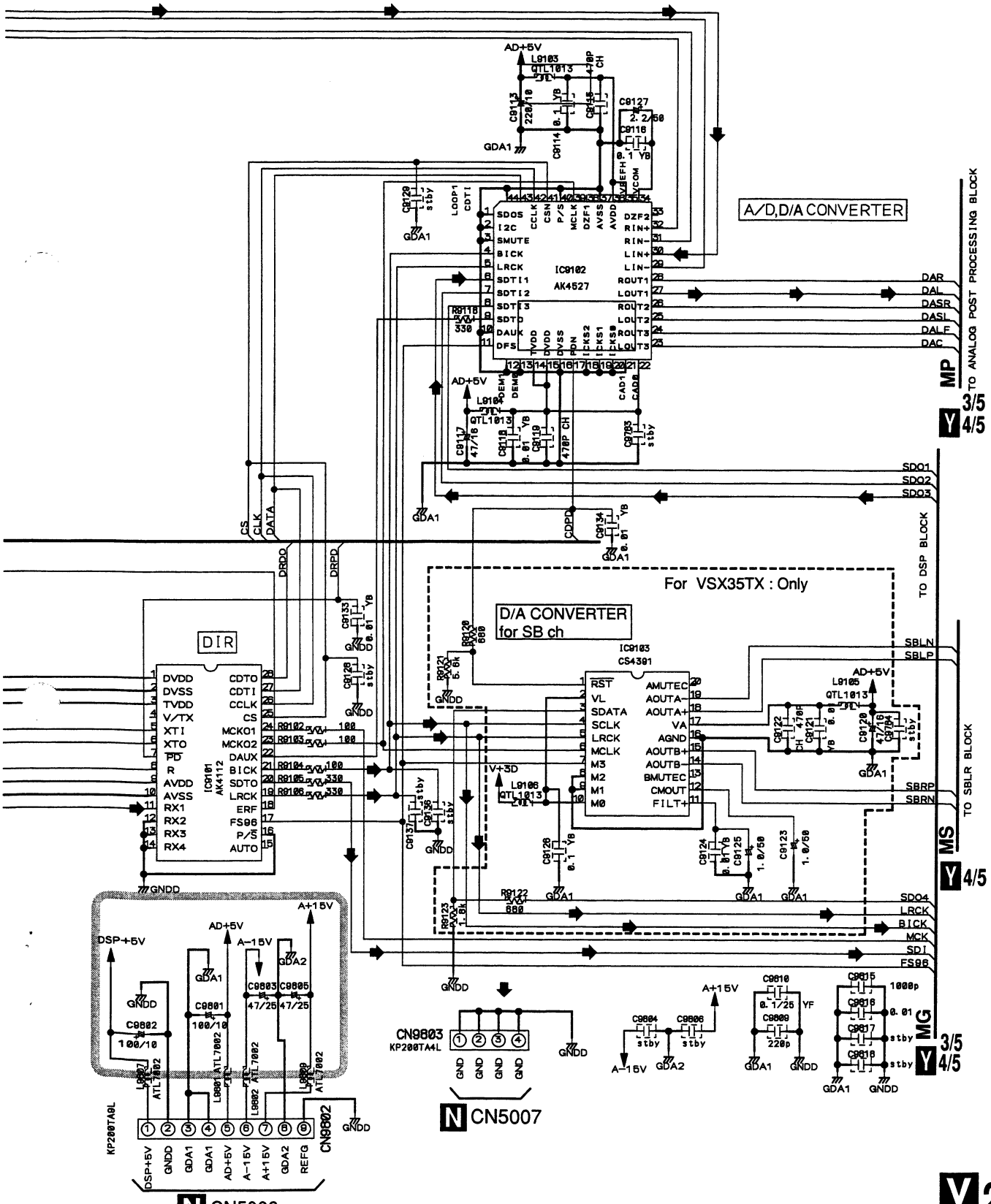

http://www.manualscenter.com

3.21 DSP ASSY (3/5)

Y 3/5 DSP ASSY
(VSX-35TX : AWX7561)(VSX-33TX : AWX7611)

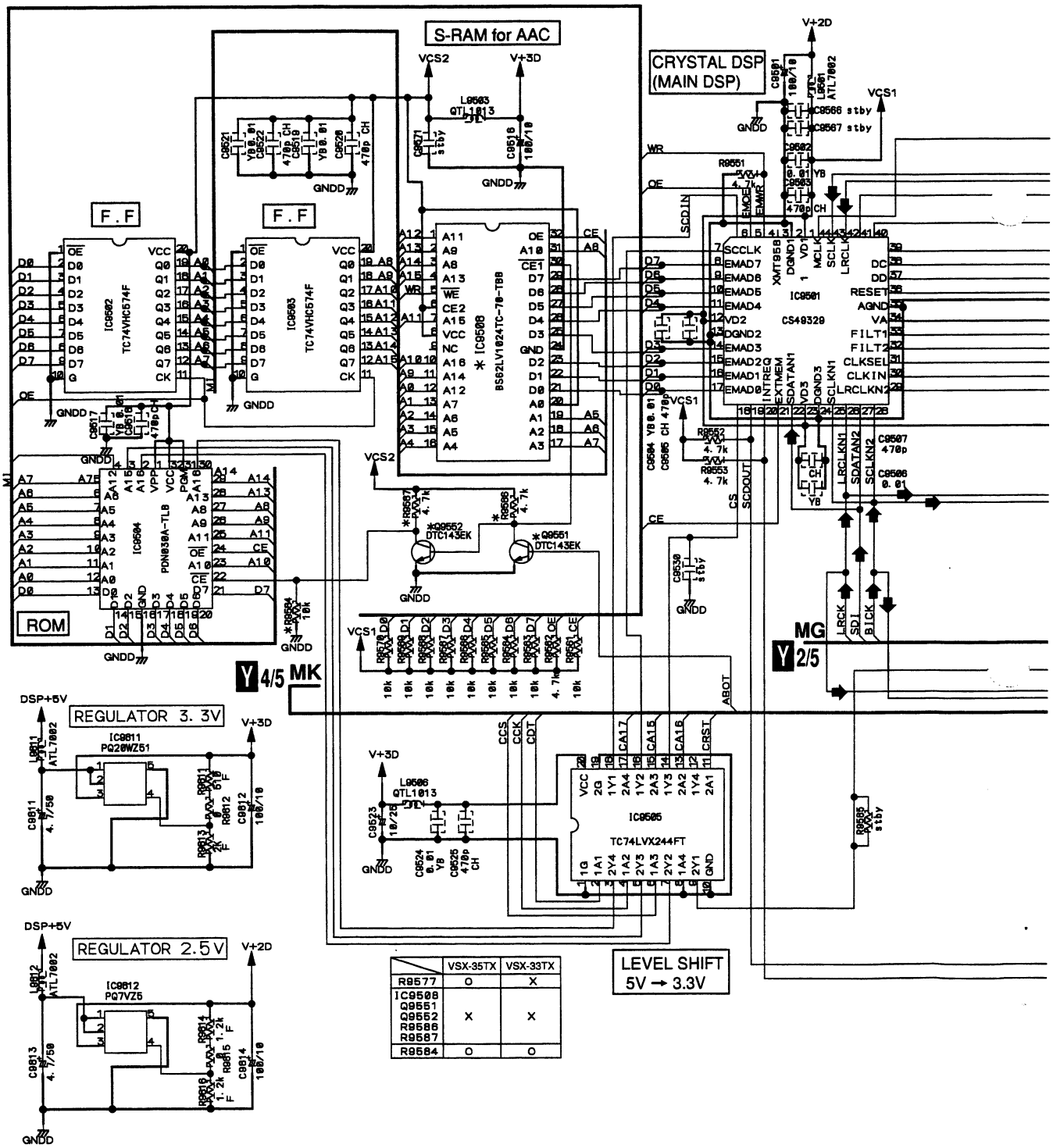

	VSX-35TX	VSX-33TX
R9577	O	X
IC9508 Q9551 Q9552 R9586 R9587	X	X
R9584	O	O

http://www.manualscenter.com

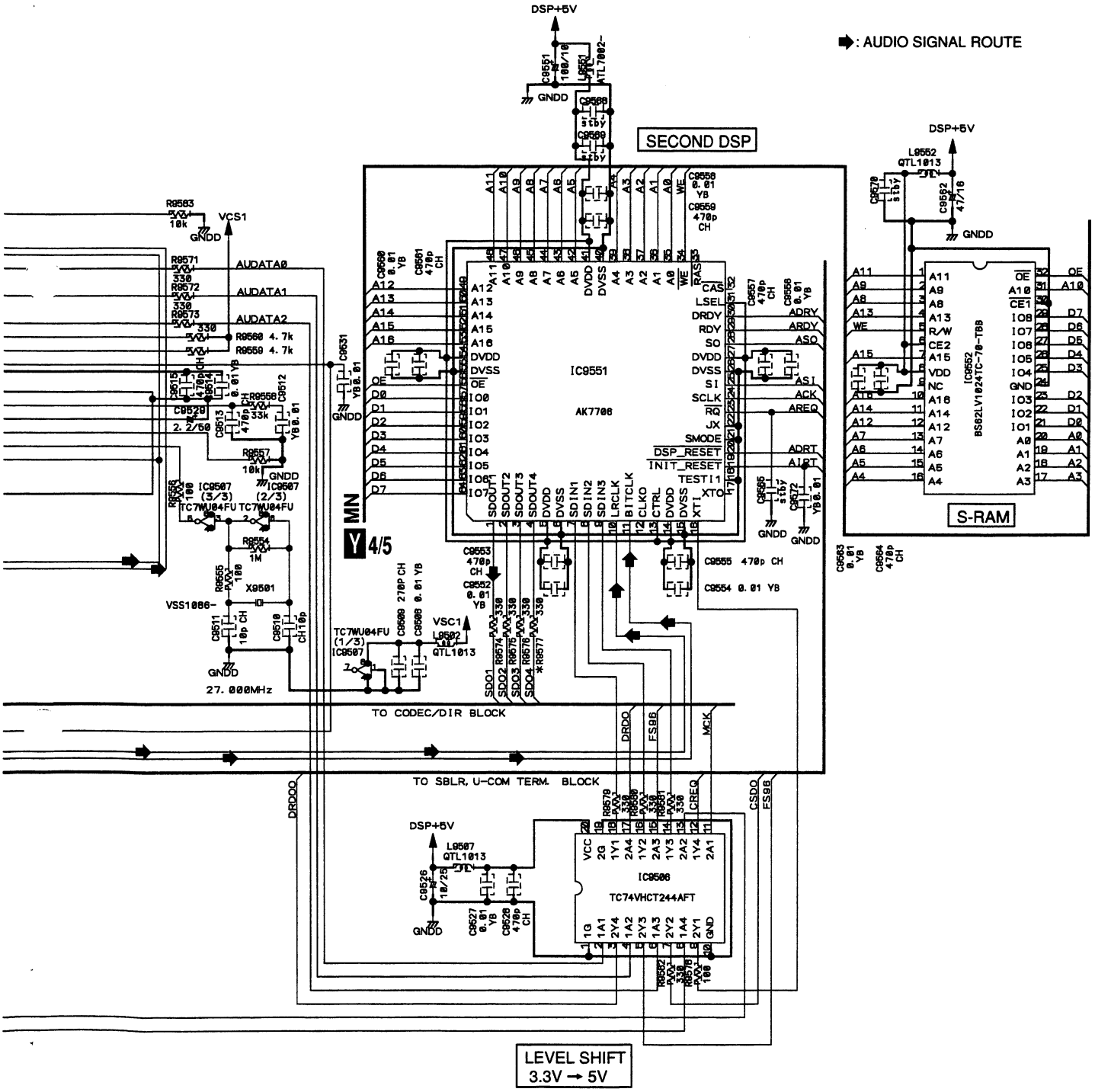

http://www.manualscenter.com

3.22 DSP ASSY (4/5)

Y 4/5 DSP ASSY
(VSX-35TX : AWX7561) (VSX-33TX : AWX7611)

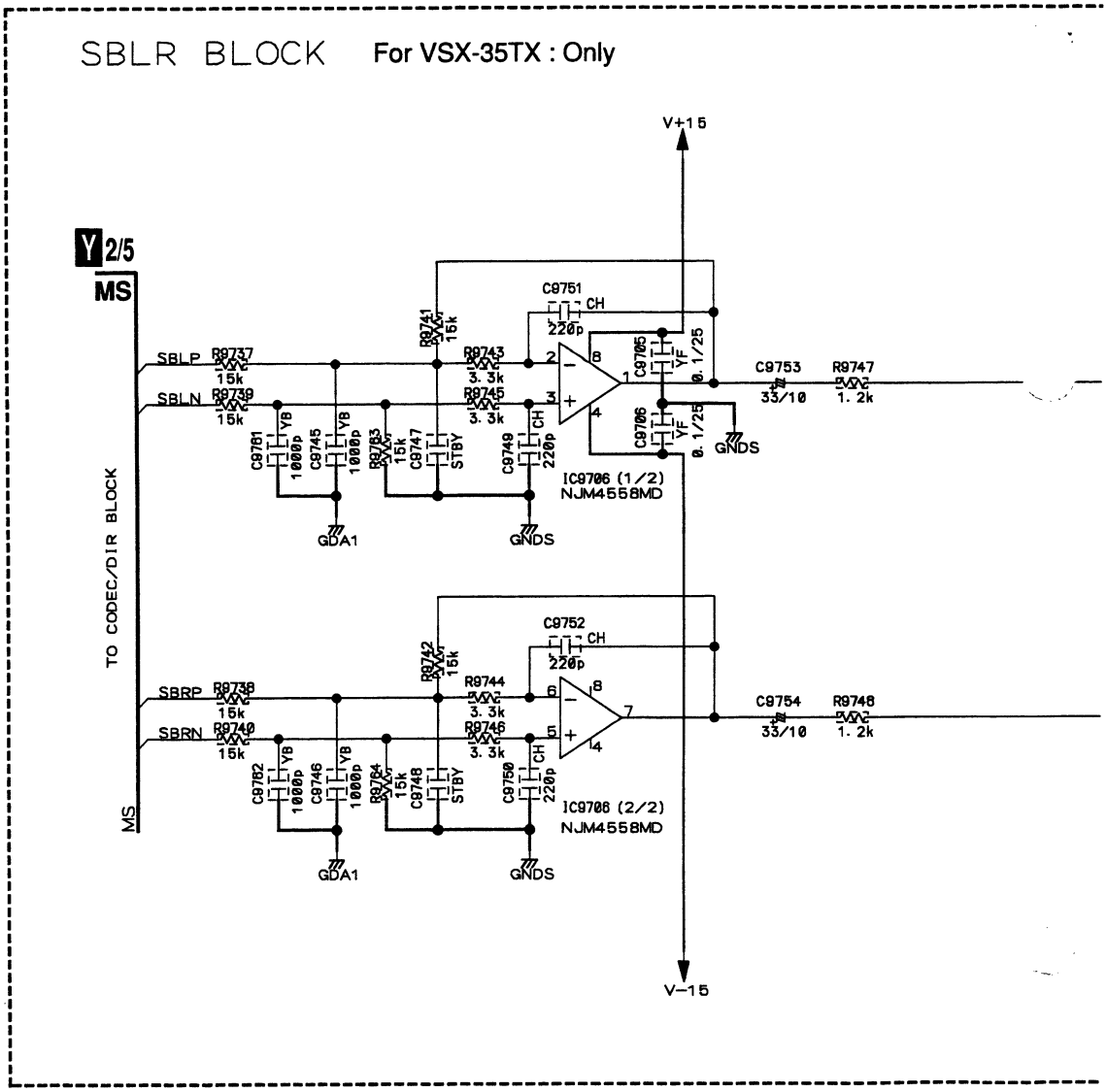

U-COM TERM. BLOCK

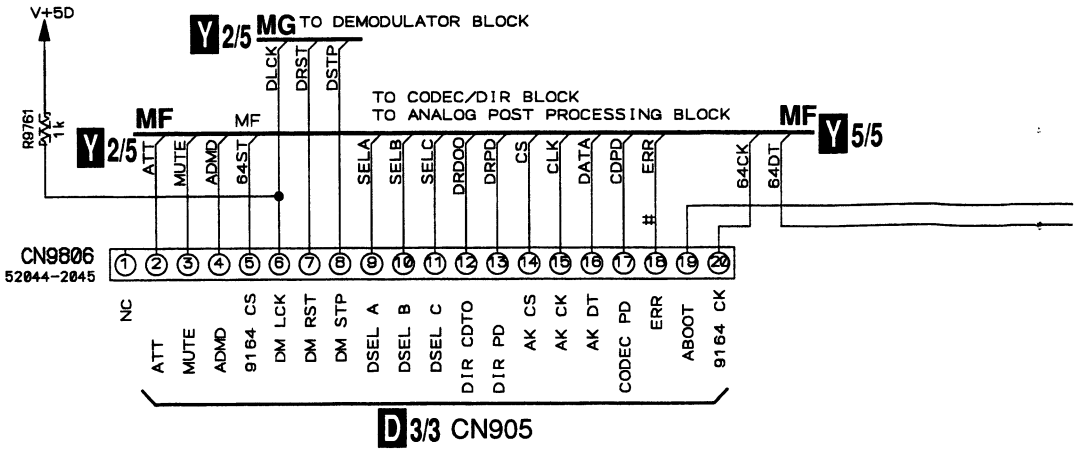

http://www.manualscenter.com

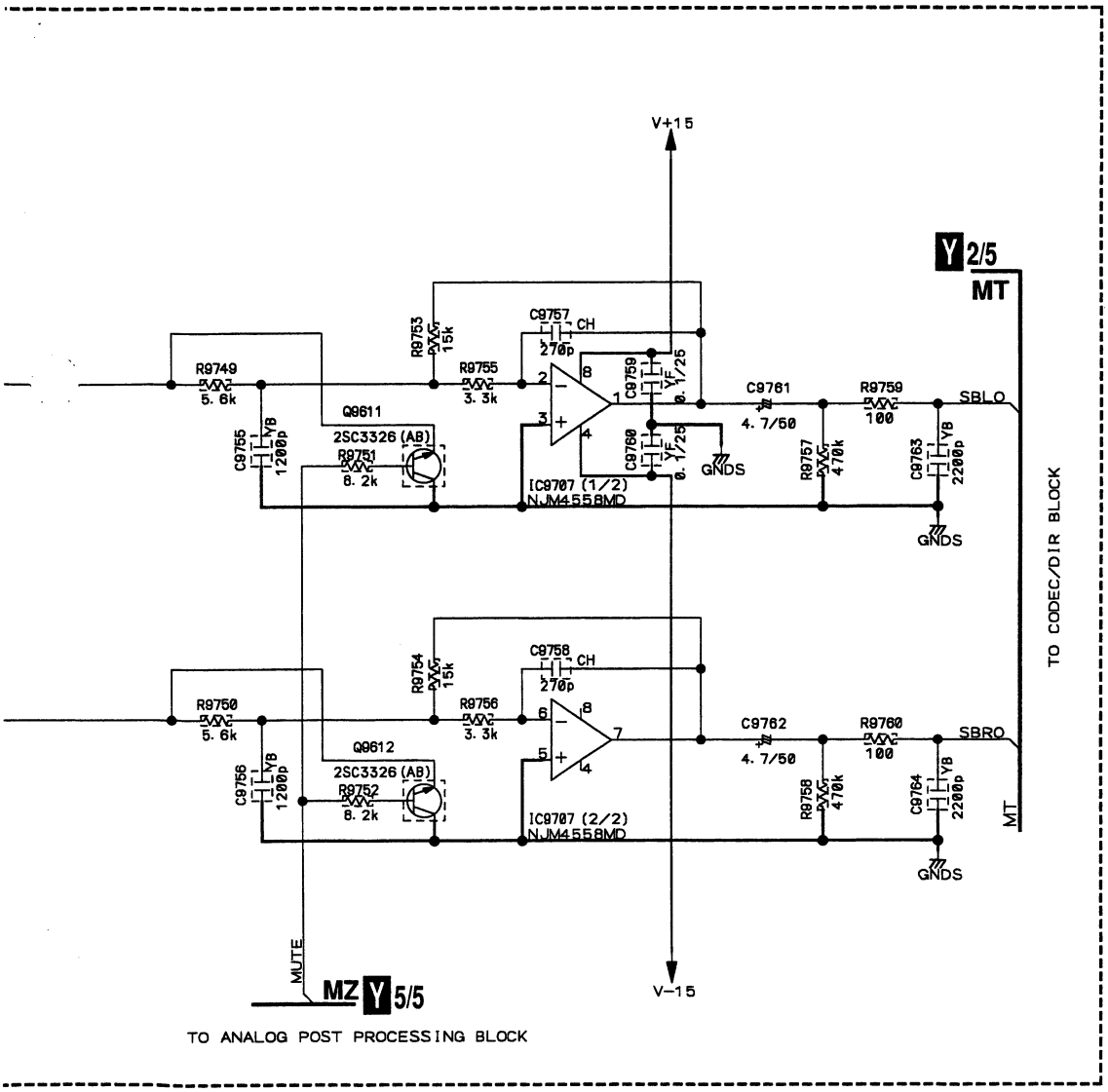

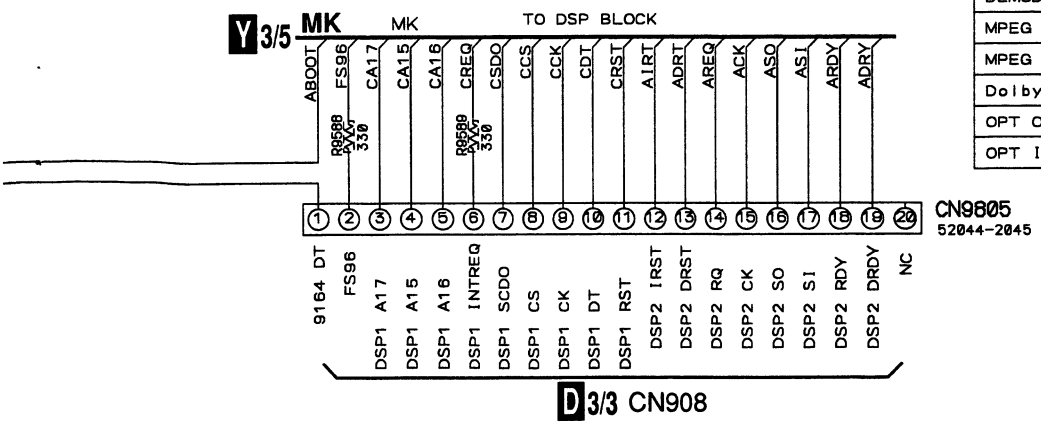

	VSX-35TX	VSX-33TX
DEMODULATOR	×	×
MPEG BC	×	×
MPEG AAC	×	×
Dolby EX	○	×
OPT OUT	2	1
OPT IN (FRONT)	○	×

http://www.manualscenter.com

3.23 DSP ASSY (5/5)

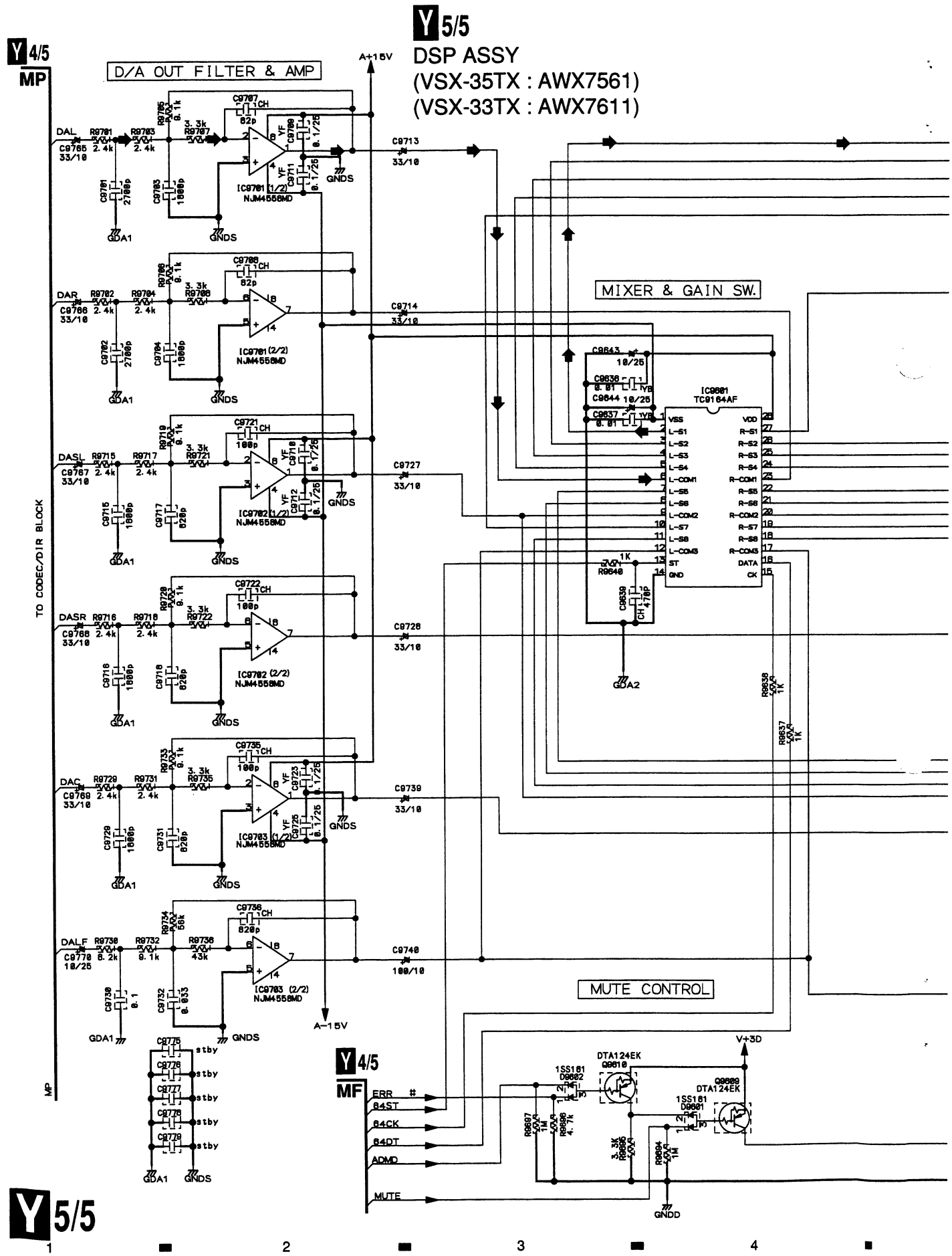

http://www.manualscenter.com

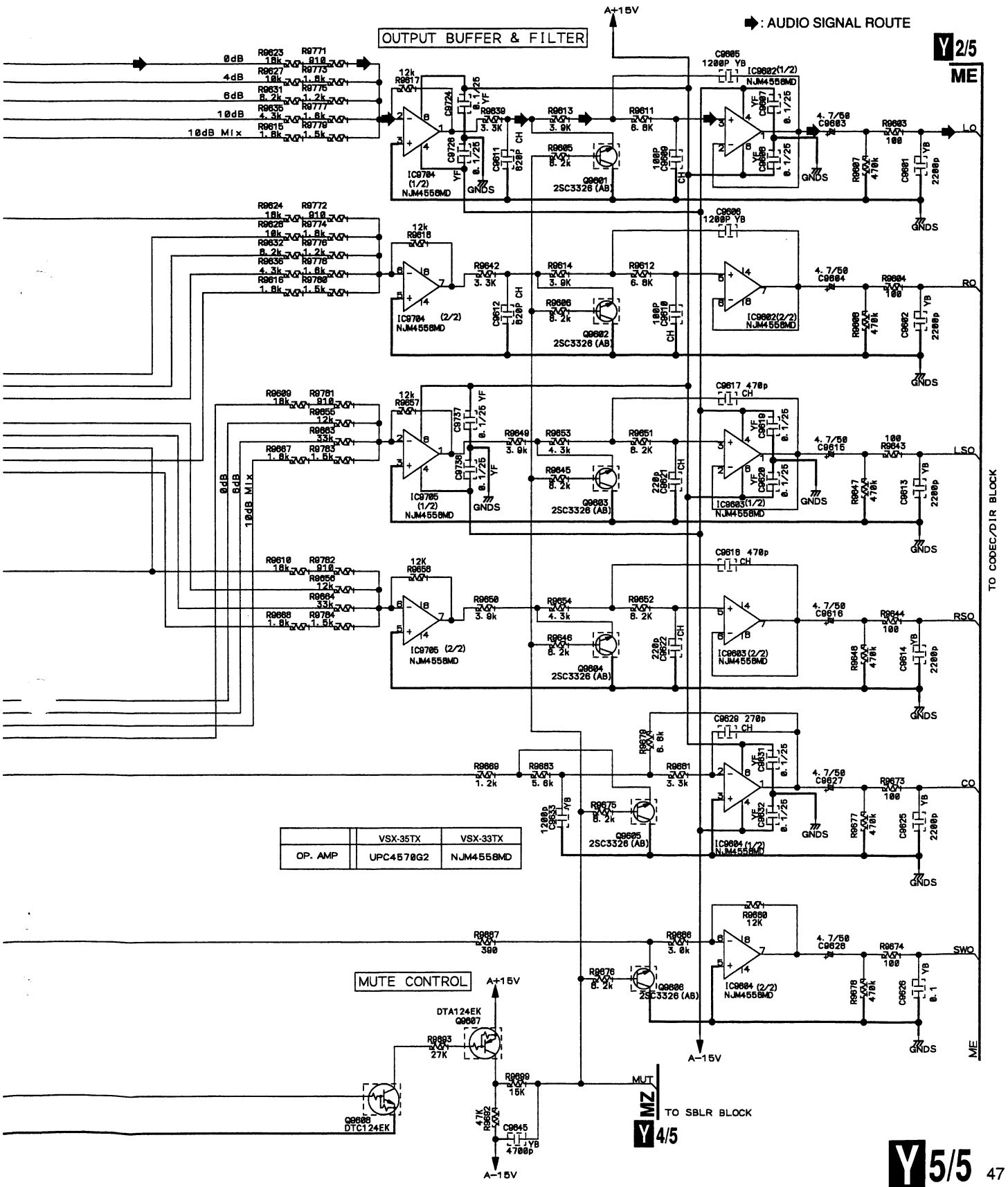

	VSX-35TX	VSX-33TX
OP. AMP	UPC4570G2	NJM4558MD

4. PCB CONNECTION DIAGRAM

NOTE FOR PCB DIAGRAMS :

1. Part numbers in PCB diagrams match those in the schematic diagrams.
2. A comparison between the main parts of PCB and schematic diagrams is shown below.

Symbol In PCB Diagrams	Symbol In Schematic Diagrams	Part Name
B C E	B C E B C E	Transistor
B C E	B C E B C E	Transistor with resistor
D G S	D G S D G S	Field effect transistor
		Resistor array
		3-terminal regulator

3. The parts mounted on this PCB include all necessary parts for several destinations.
   For further information for respective destinations, be sure to check with the schematic diagram.
4. View point of PCB diagrams.

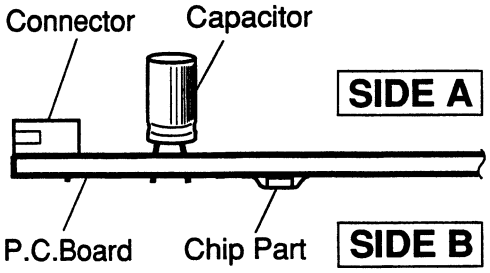

http://www.manualscenter.com

4.1 FM/AM TUNER UNIT

A FM/AM TUNER UNIT

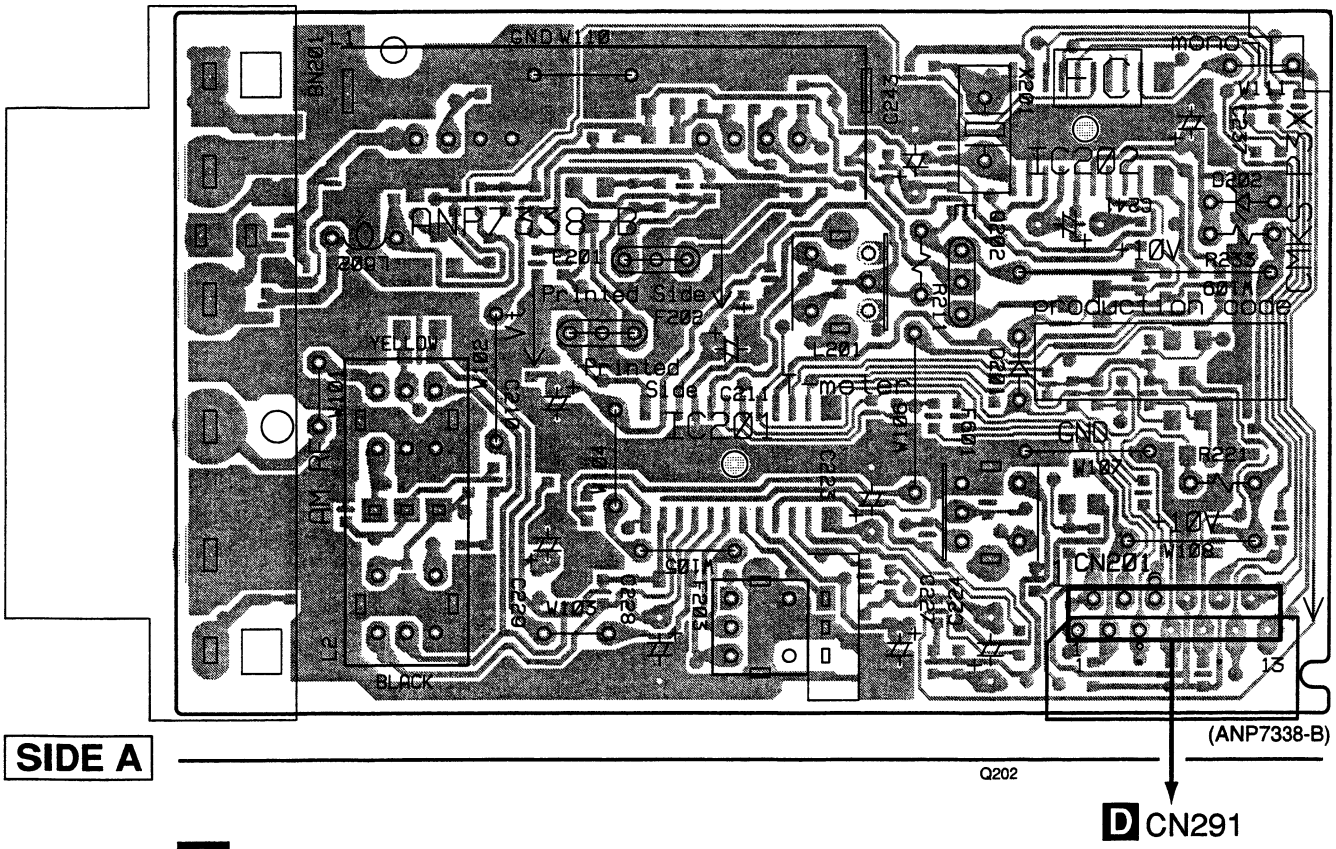

SIDE A

A FM/AM TUNER UNIT

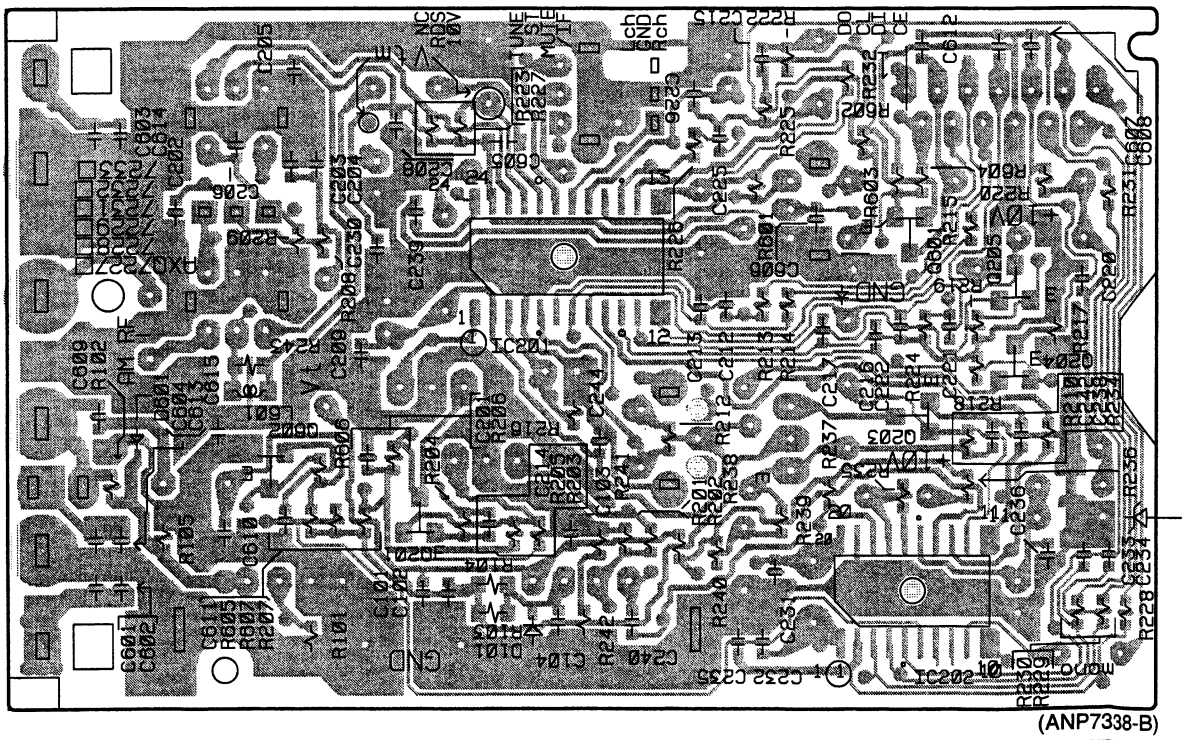

SIDE B

Q602 IC201 Q203 Q601 IC202 Q204 Q205

http://www.manualscenter.com

4.2 EX I/O ASSY (5.1CH I/O ASSY)

B EX I/O ASSY (5.1CH I/O ASSY)

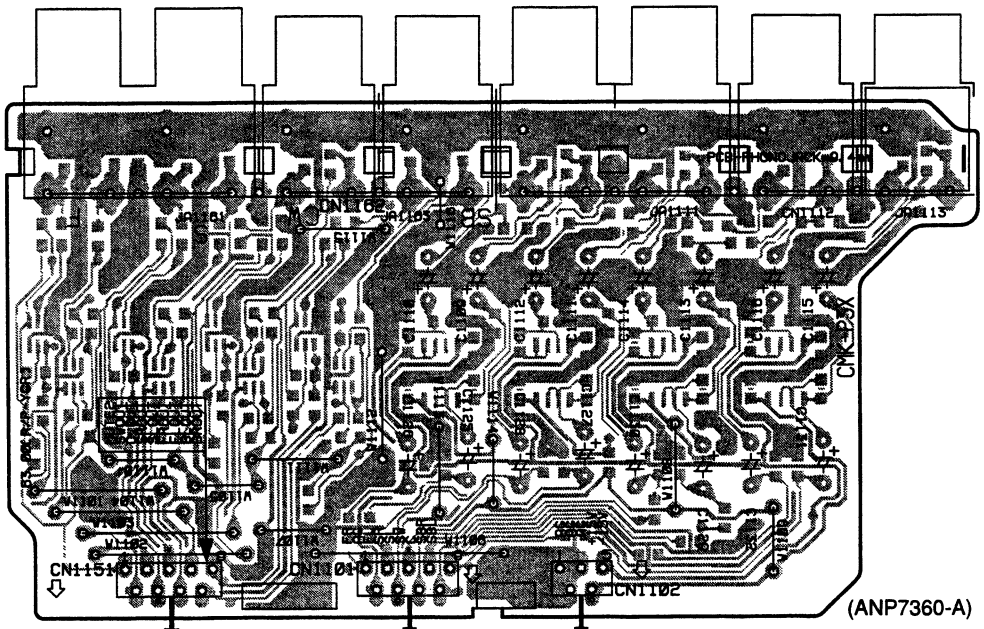

E CN1503 E CN1501 E CN1505

SIDE A

B EX I/O ASSY (5.1CH I/O ASSY)

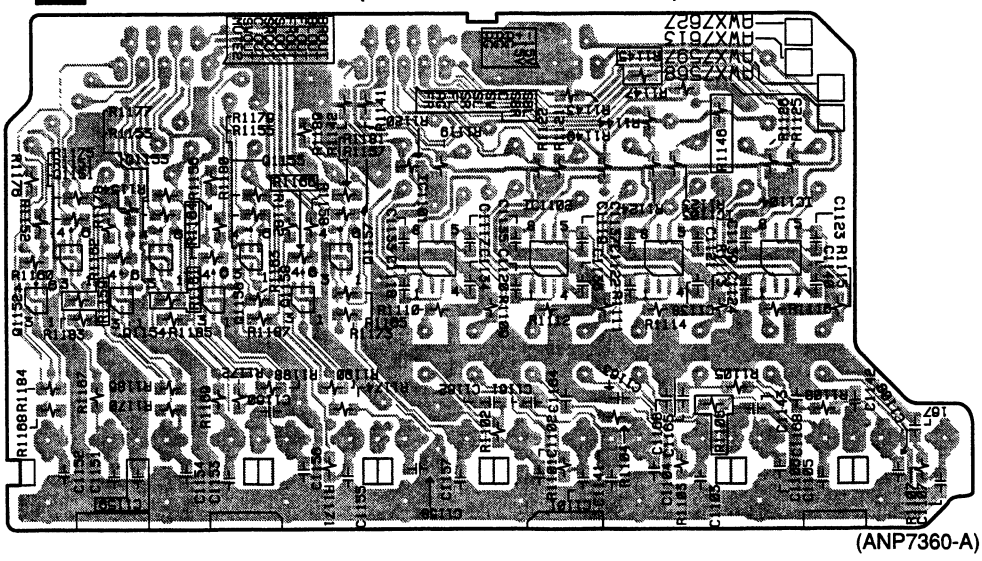

Q1151 Q1153 Q1155 Q1157 IC1101 IC1102 IC1103 IC1104
Q1152 Q1154 Q1156 Q1158

SIDE B

http://www.manualscenter.com

4.3 INPUT ASSY

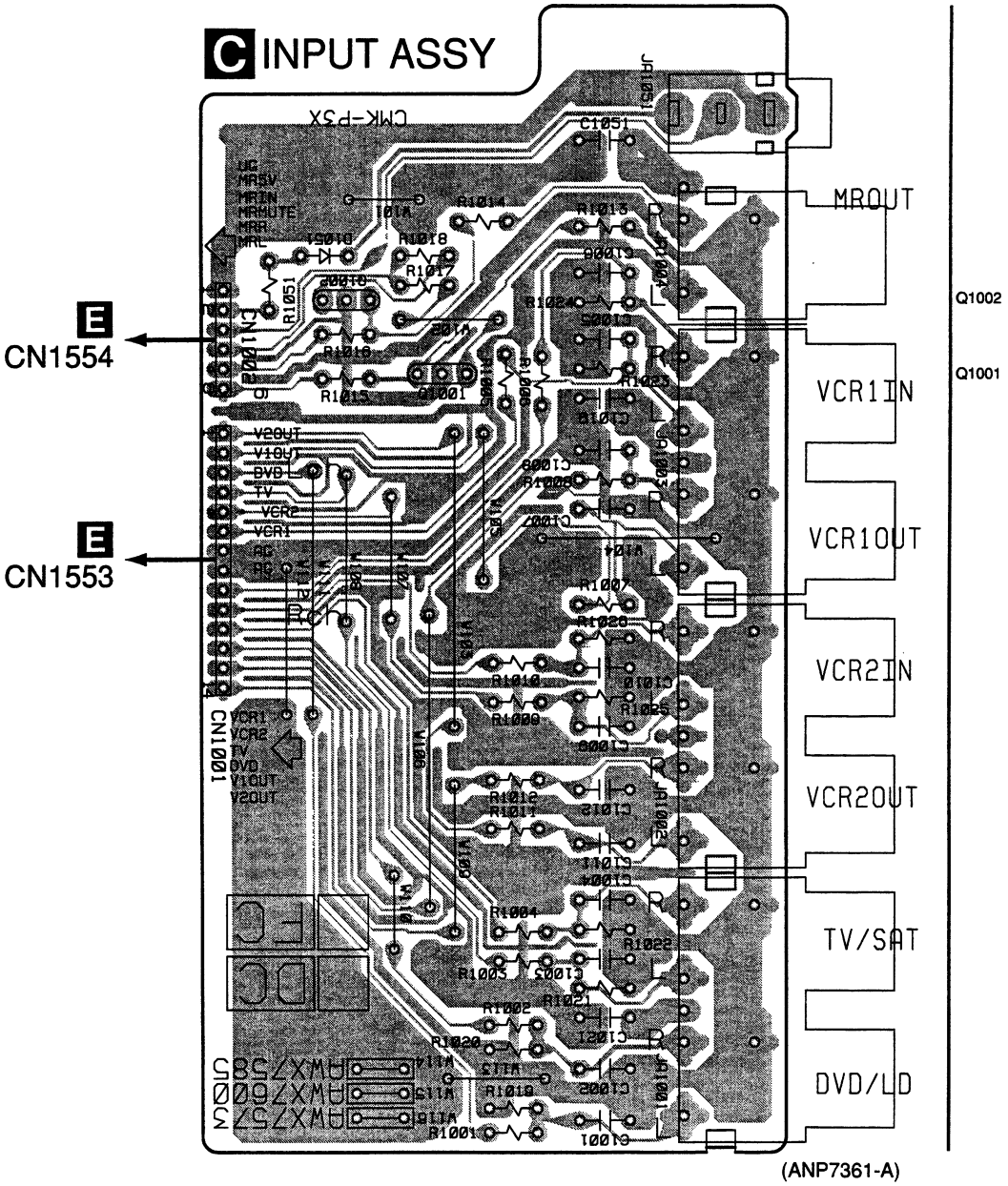

(ANP7361-A)

SIDE A

http://www.manualscenter.com

4.4 MAIN CONTROL ASSY

D MAIN CONTROL ASSY

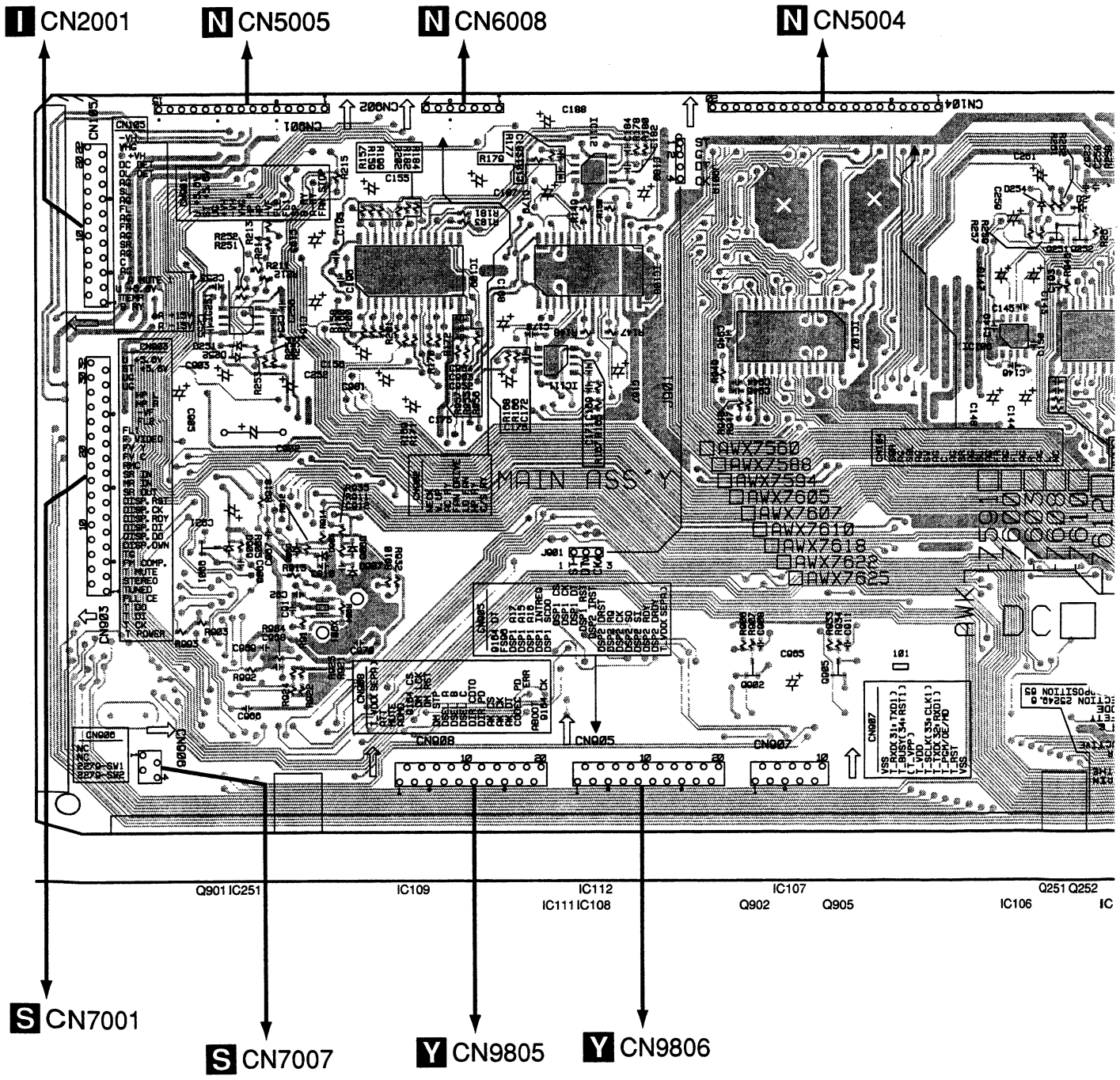

http://www.manualscenter.com

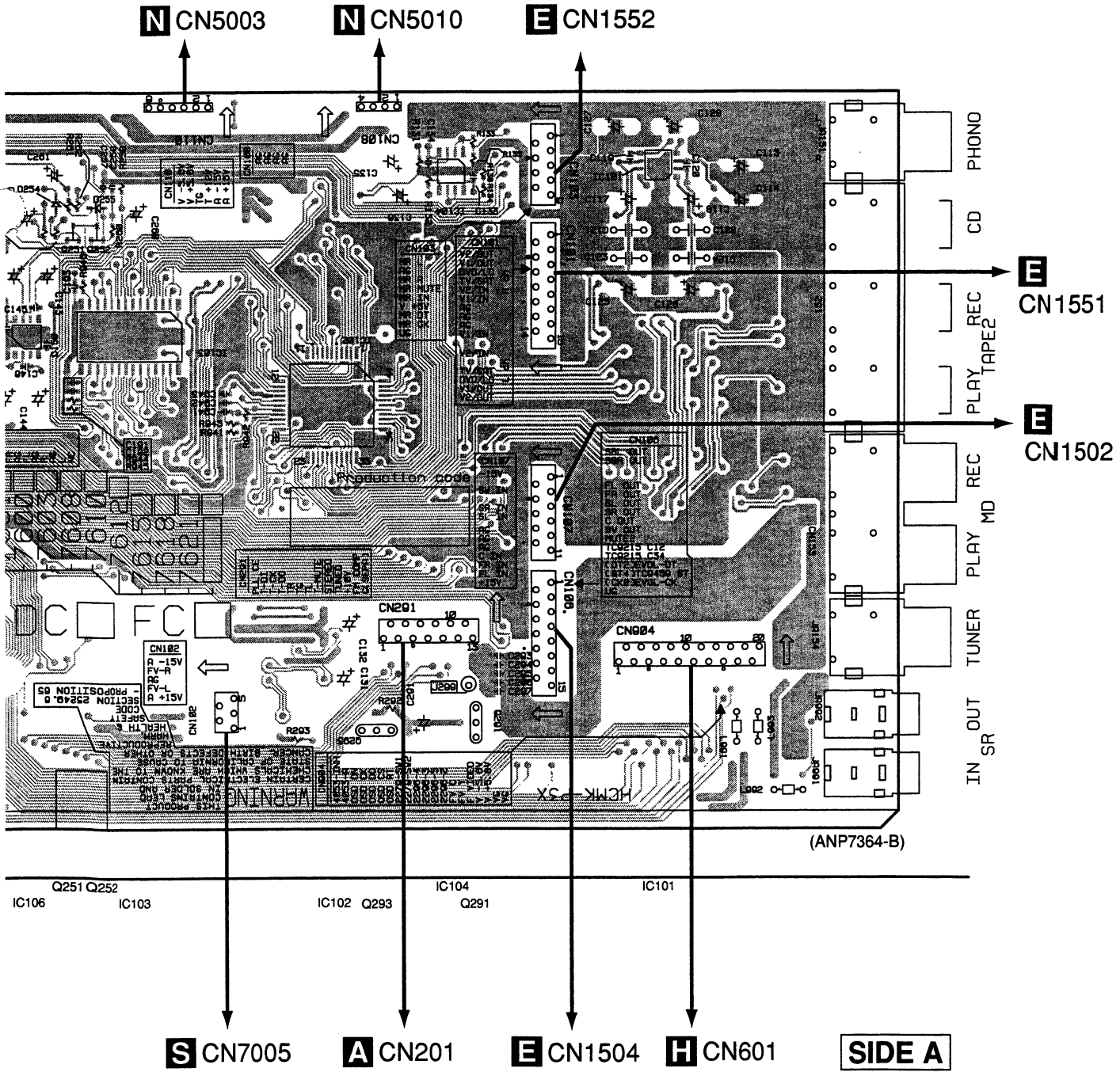

http://www.manualscenter.com

D MAIN CONTROL ASSY

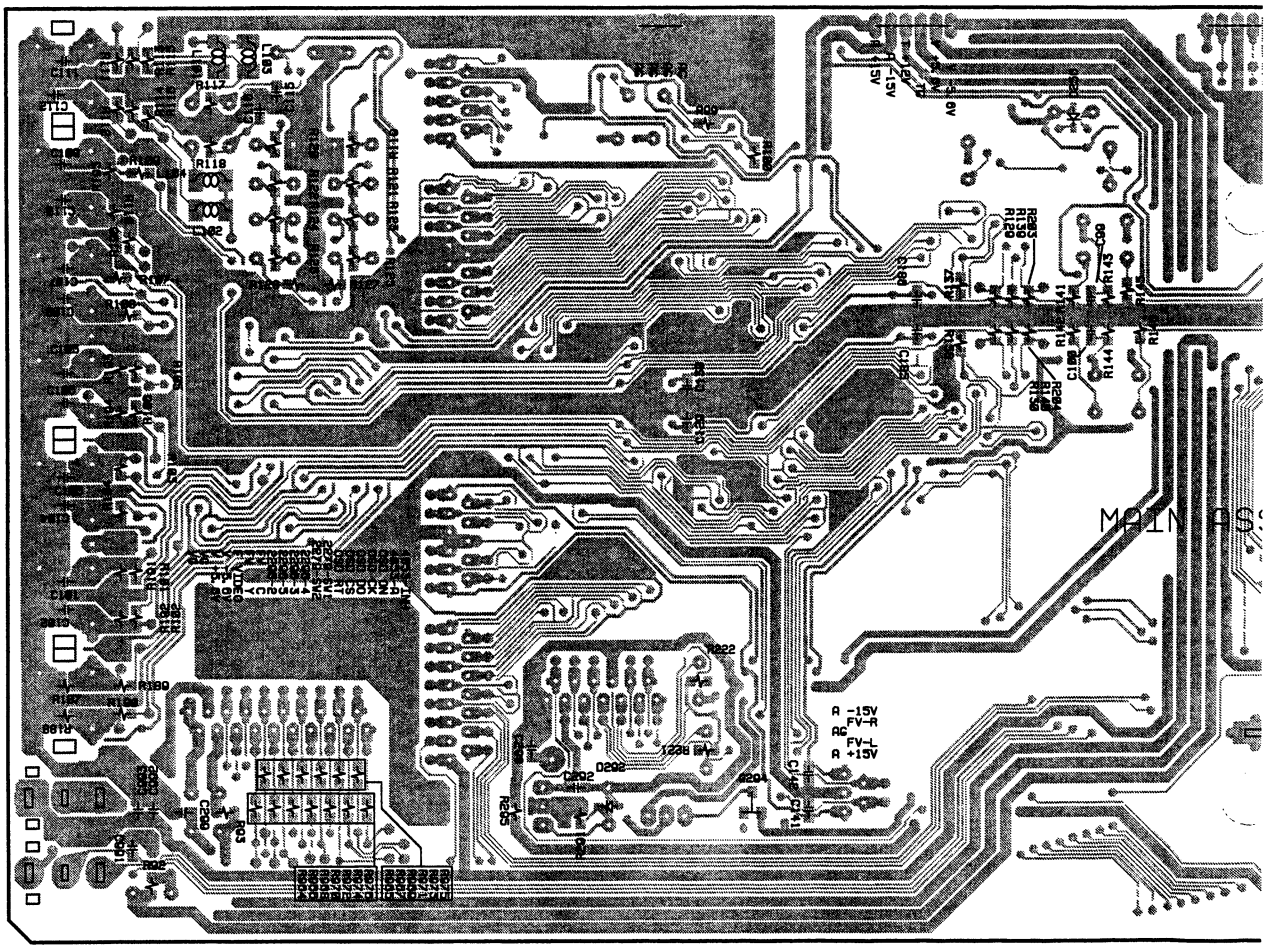

Q294

http://www.manualscenter.com

A

B

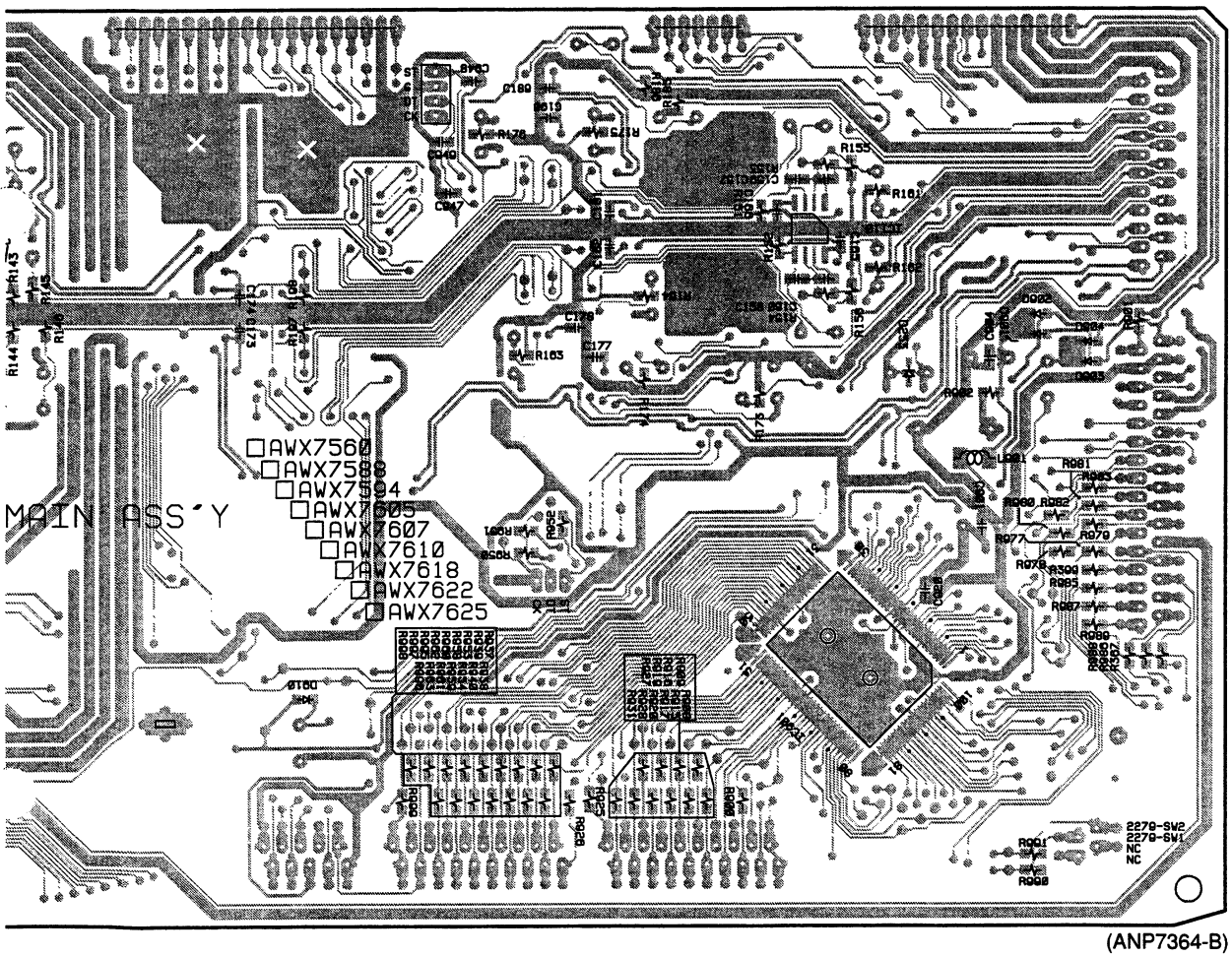

(ANP7364-B)

C

IC110 IC901

D

SIDE B

http://www.manualscenter.com

4.5 A-CONNECTION ASSY

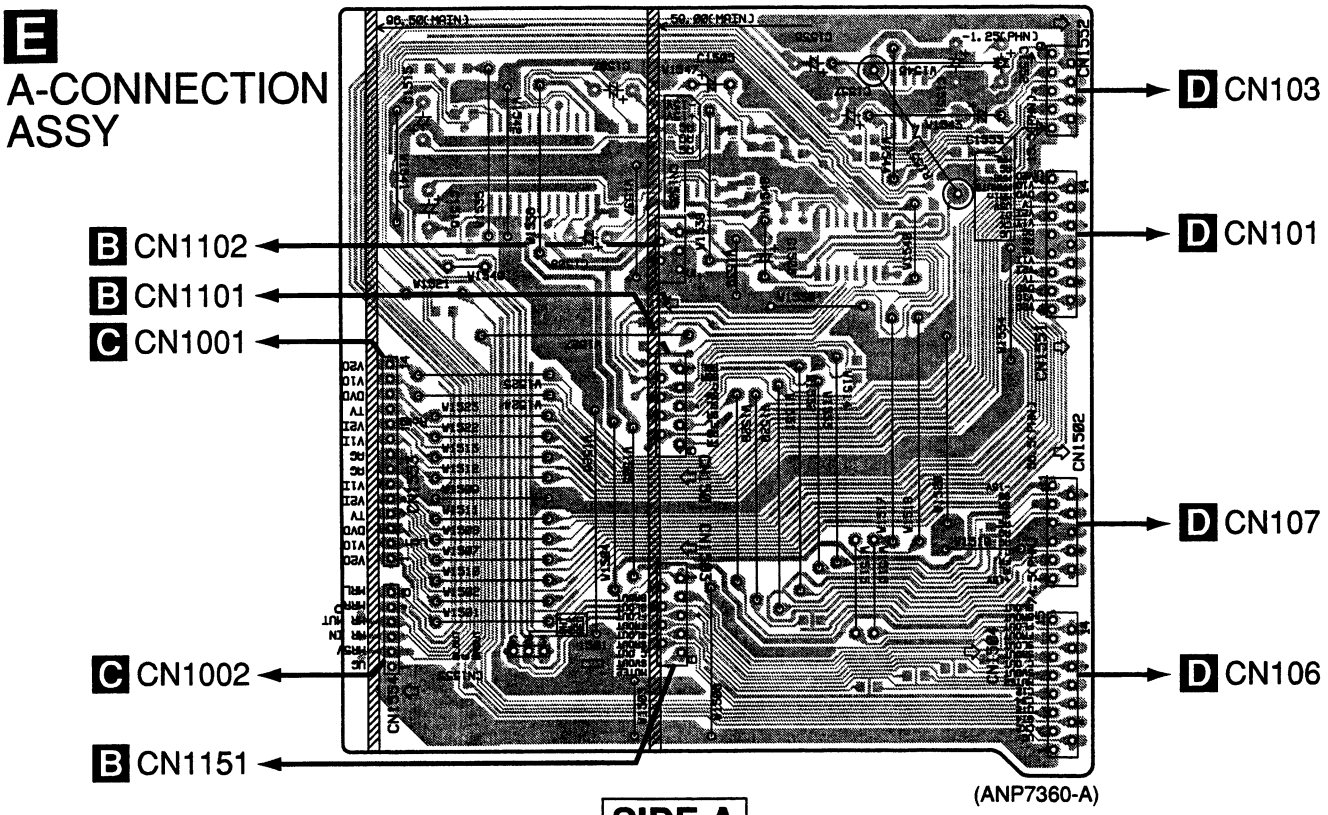

SIDE A

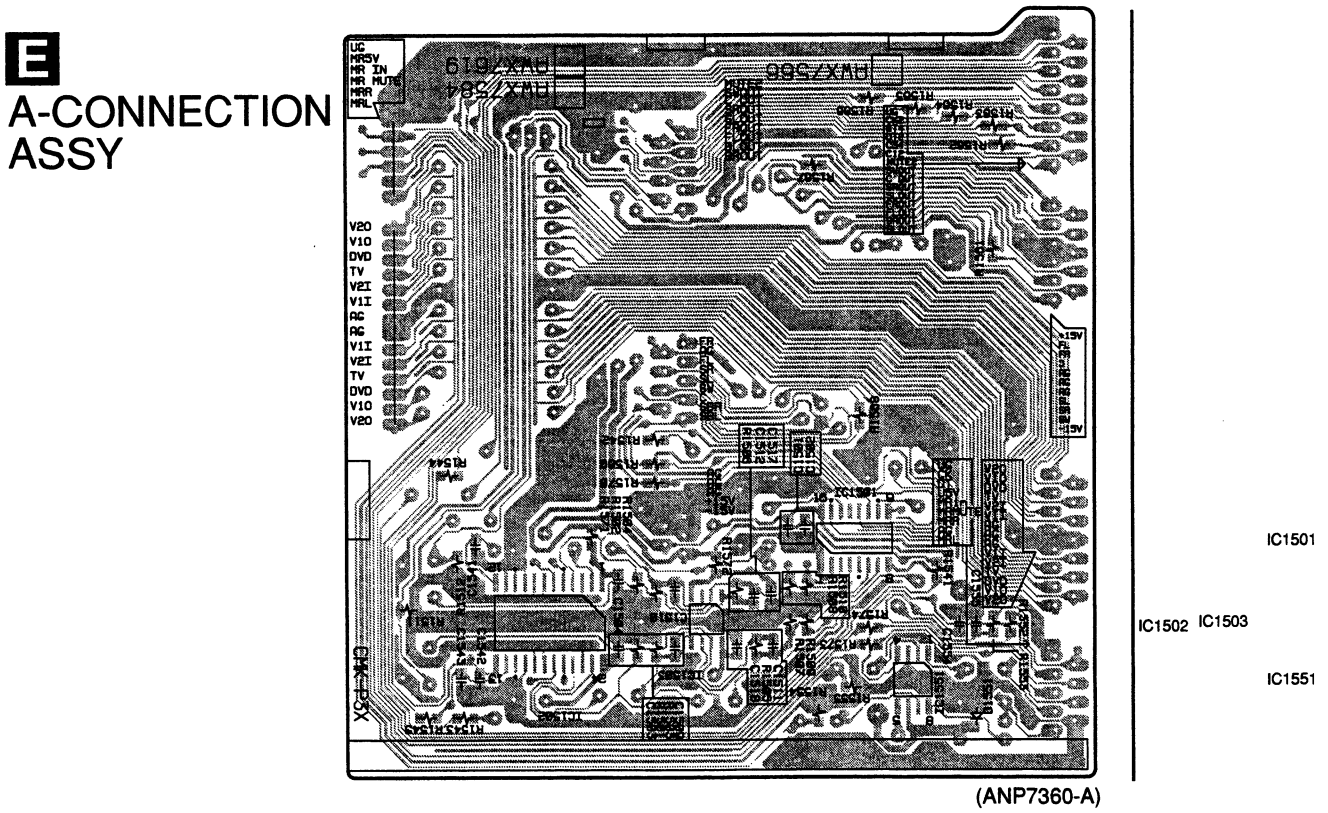

SIDE B

http://www.manualscenter.com

4.6 COMPOSITE ASSY

F COMPOSITE ASSY

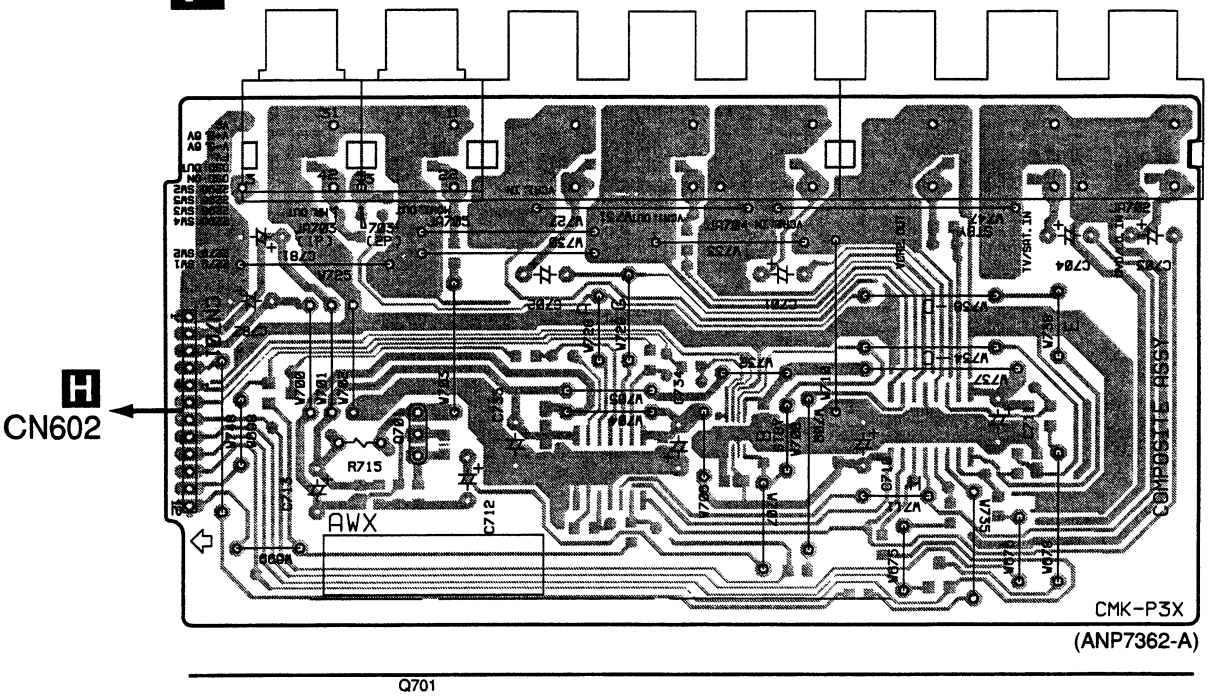

SIDE A

F COMPOSITE ASSY

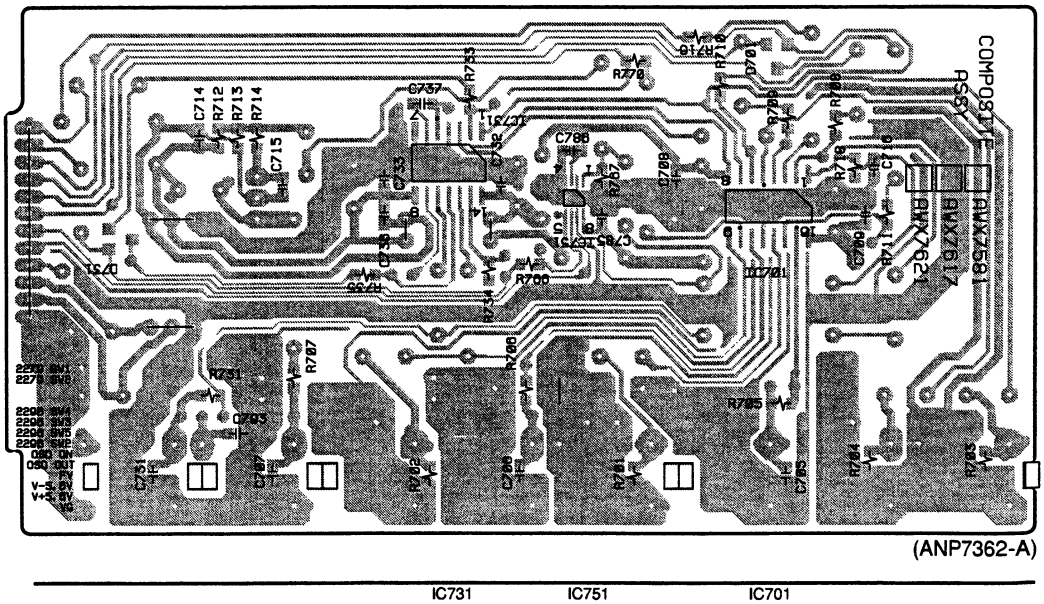

SIDE B

http://www.manualscenter.com

4.7 S VIDEO and V-CONNECTION ASSYS

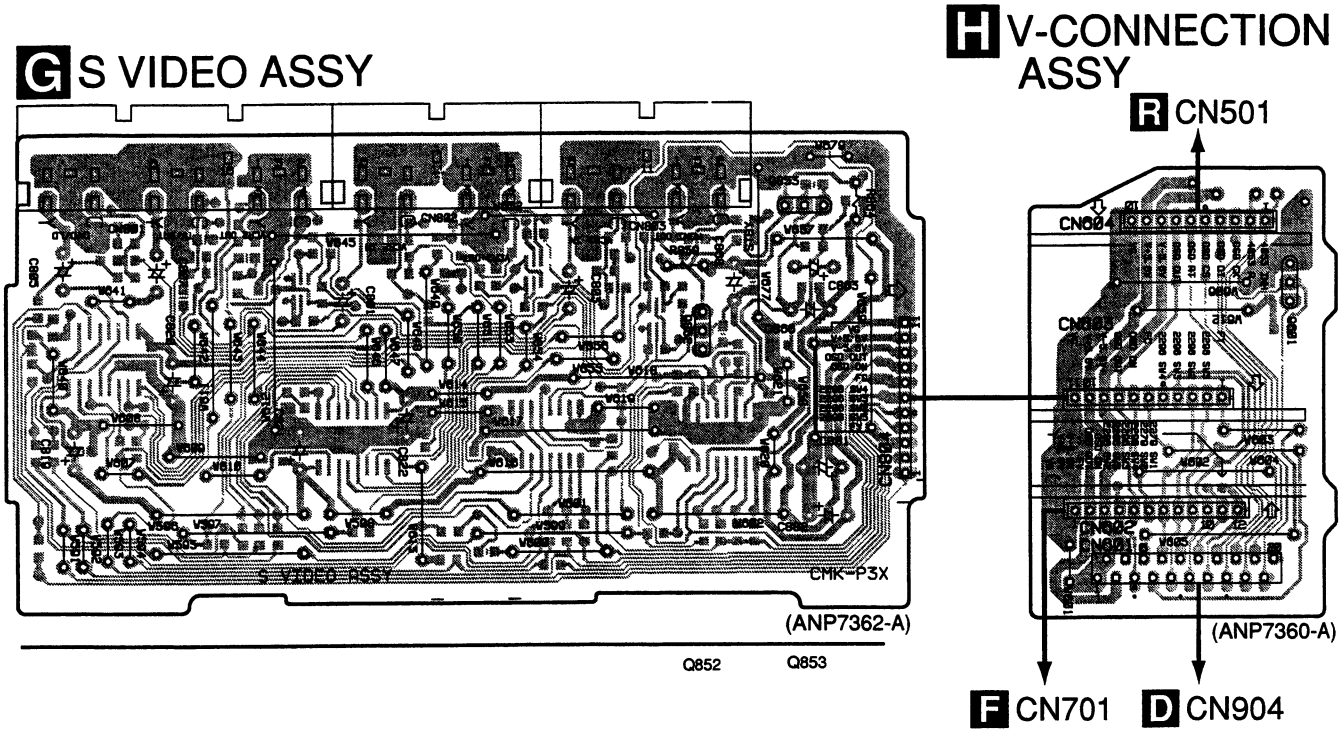

SIDE A

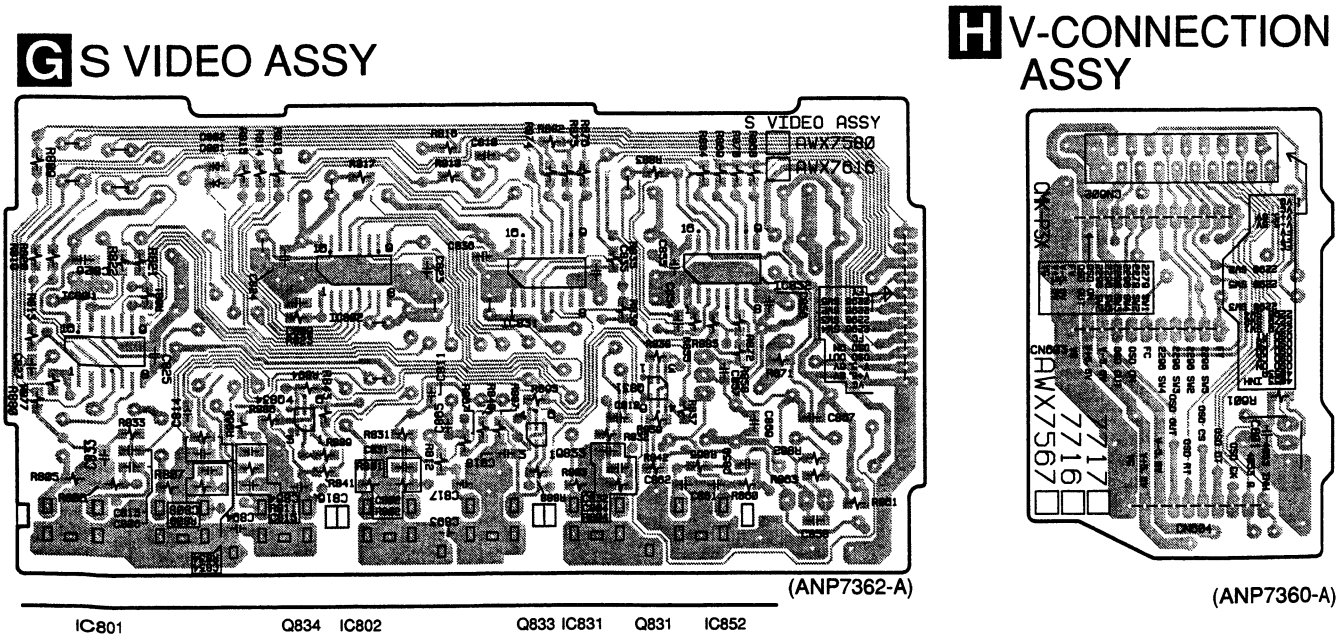

SIDE B

http://www.manualscenter.com

4.8 SP/PS ASSY

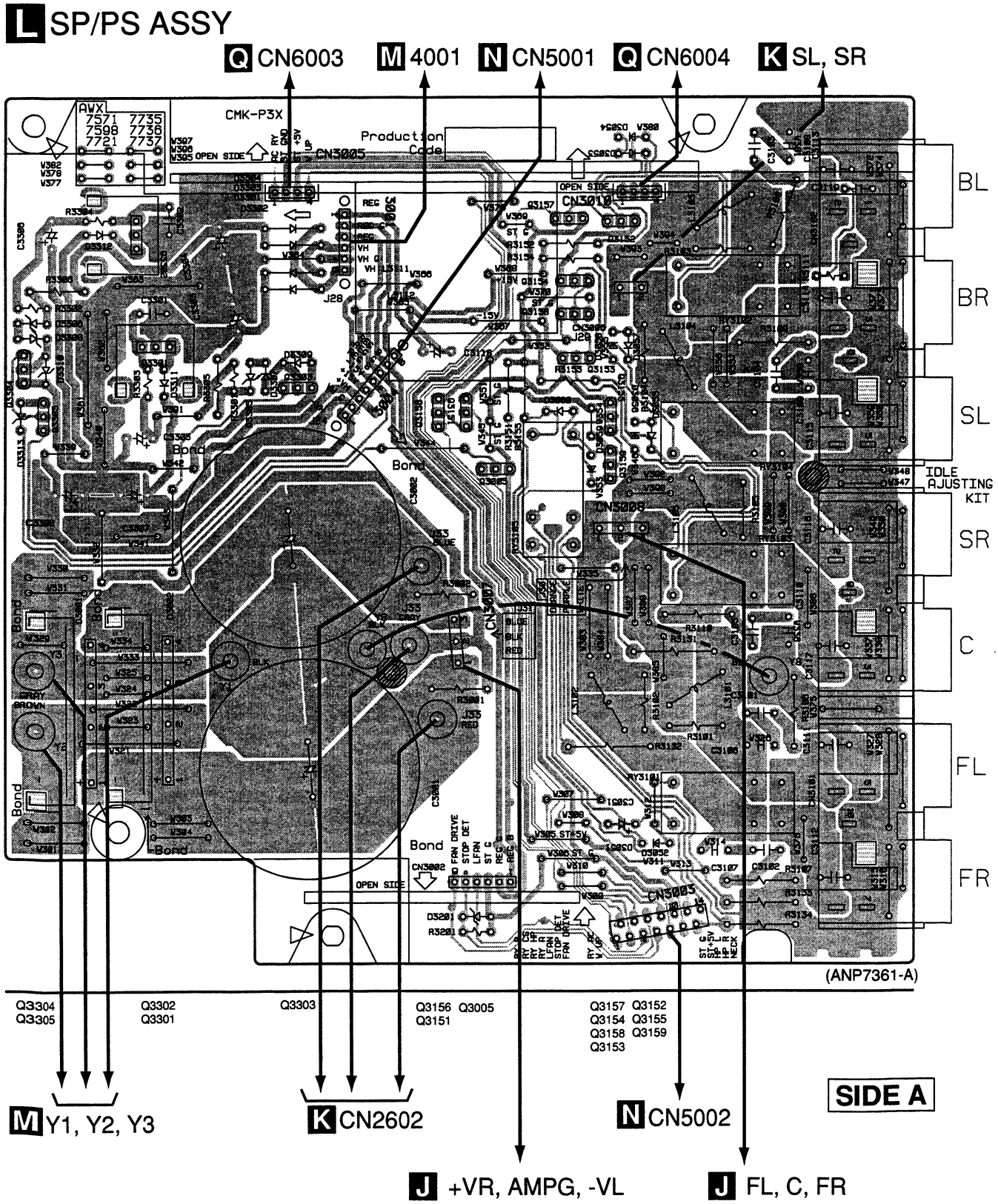

http://www.manualscenter.com

4.9 V-AMP ASSY

I V-AMP ASSY

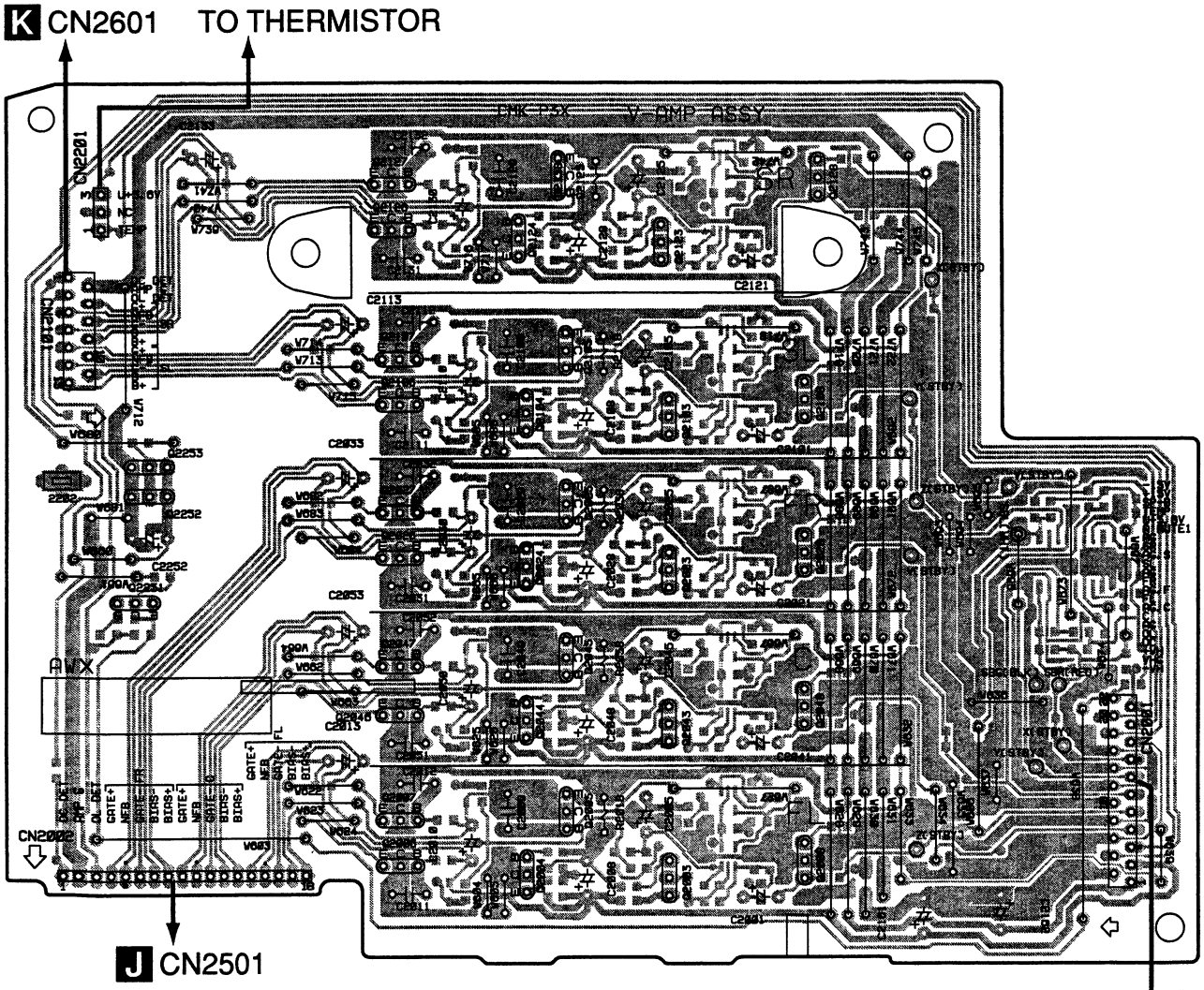

Q2253
Q2252
Q2251

Q2127 Q2047
Q2126 Q2046
Q2107 Q2007
Q2106 Q2006
Q2027
Q2028

Q2124 Q2125
Q2104 Q2105
Q2024 Q2025
Q2044 Q2045
Q2004 Q2005

Q2123
Q2103
Q2023
Q2043
Q2003

Q2128
Q2108
Q2028
Q2048
Q2008

(ANP7362-A)

SIDE A

http://www.manualscenter.com

I V-AMP ASSY

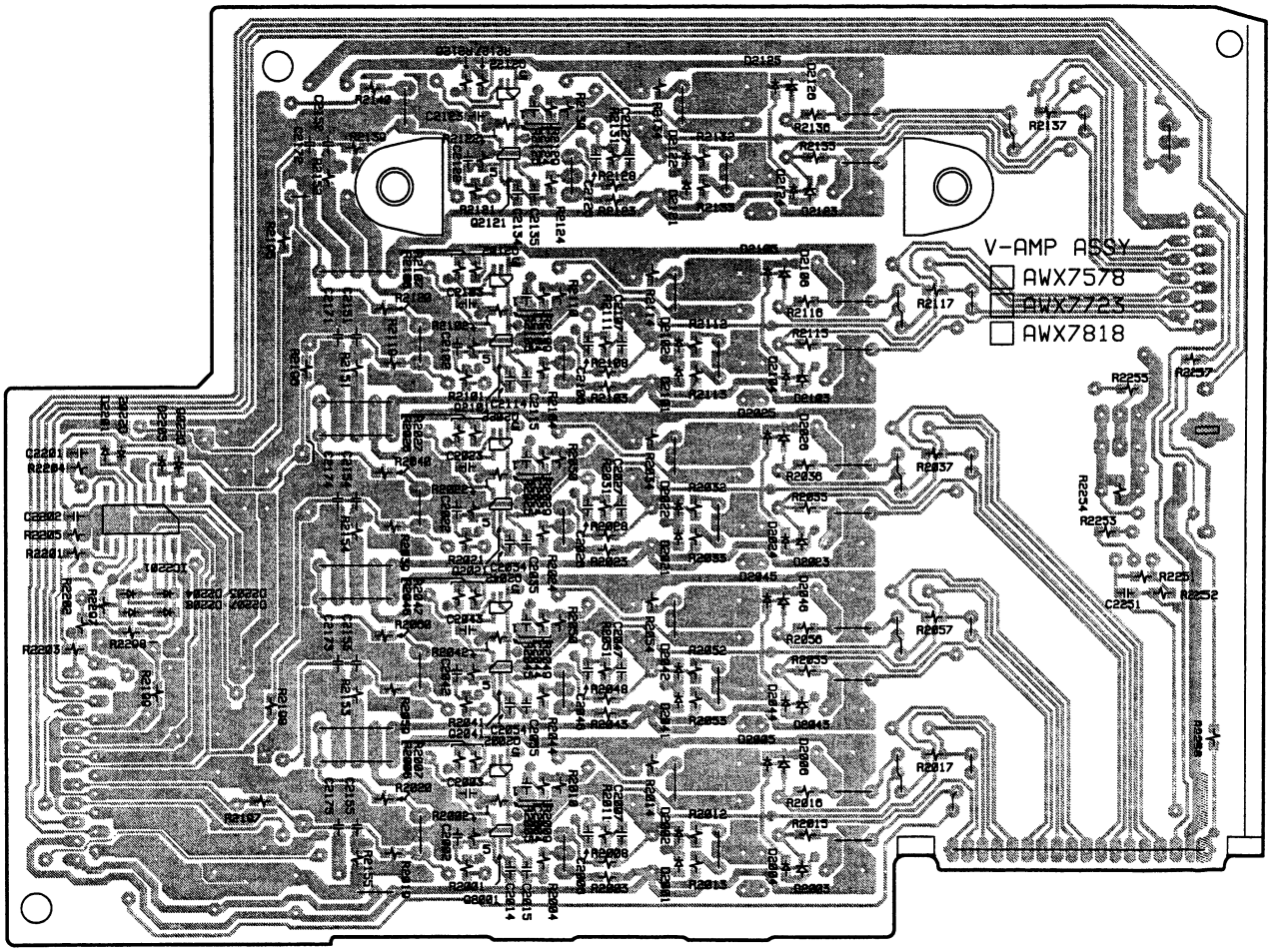

IC2201

Q2122 Q2042
Q2121 Q2041
Q2101 Q2002
Q2022 Q2001
Q2021

(ANP7352-A)

SIDE B

http://www.manualscenter.com

4.10 FRONT AMP and REAR AMP ASSYS

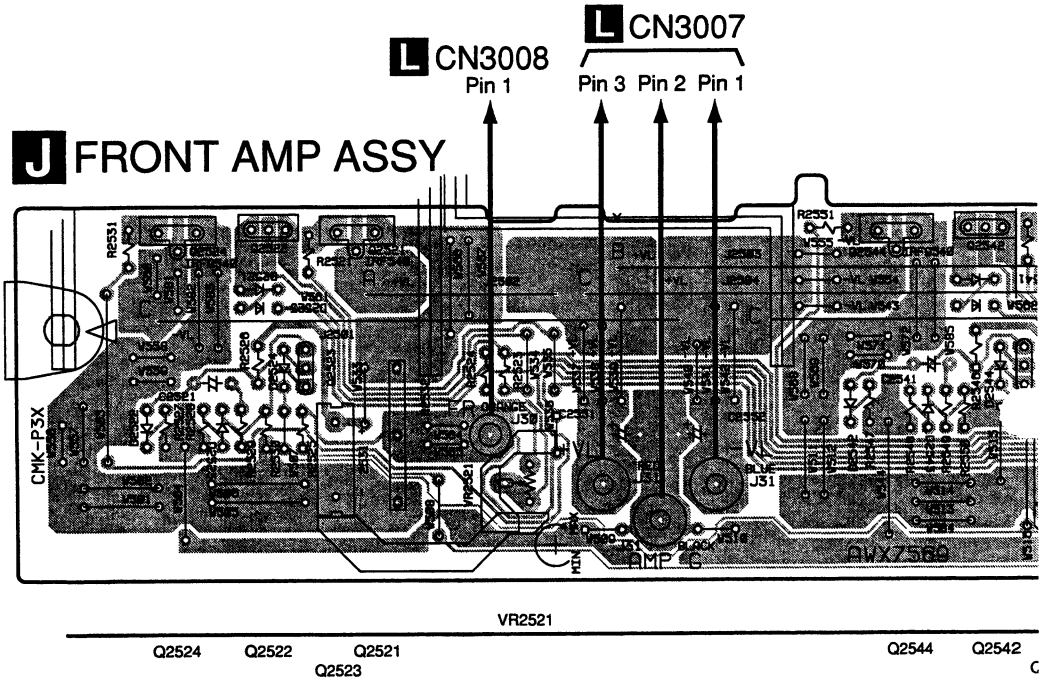

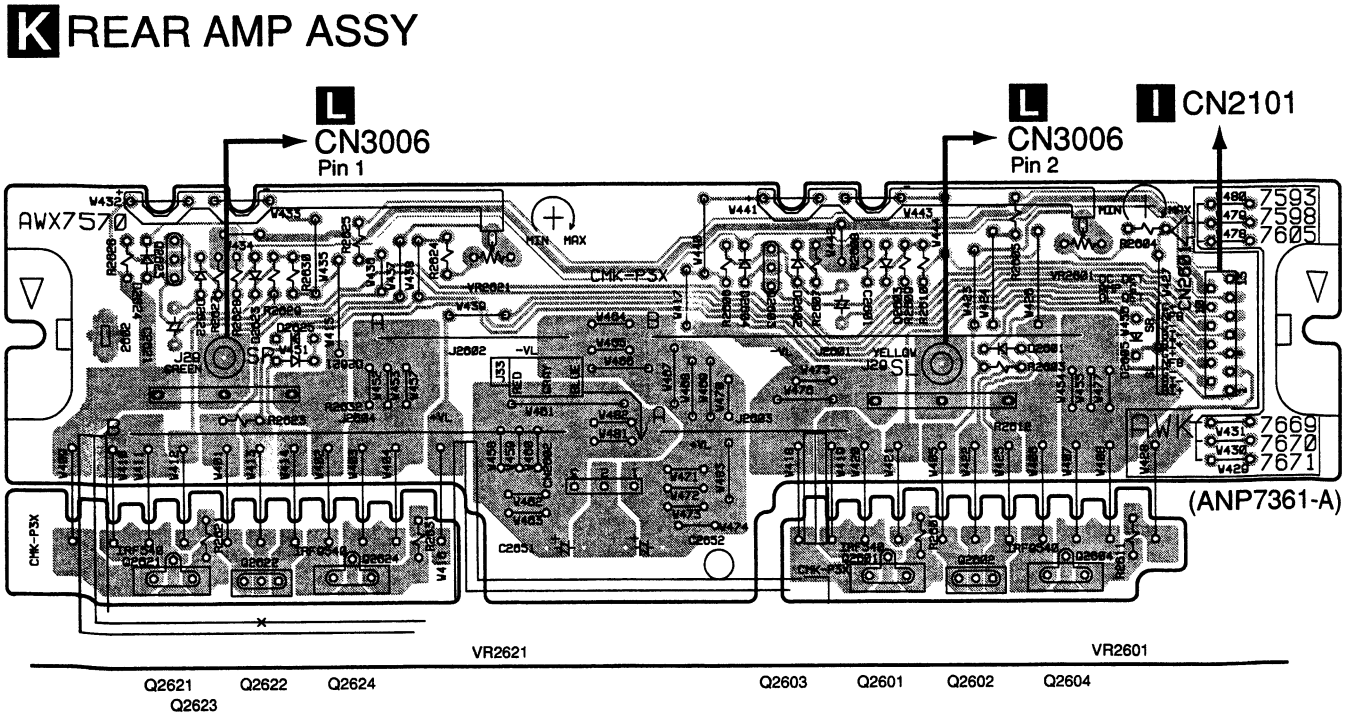

http://www.manualscenter.com

A

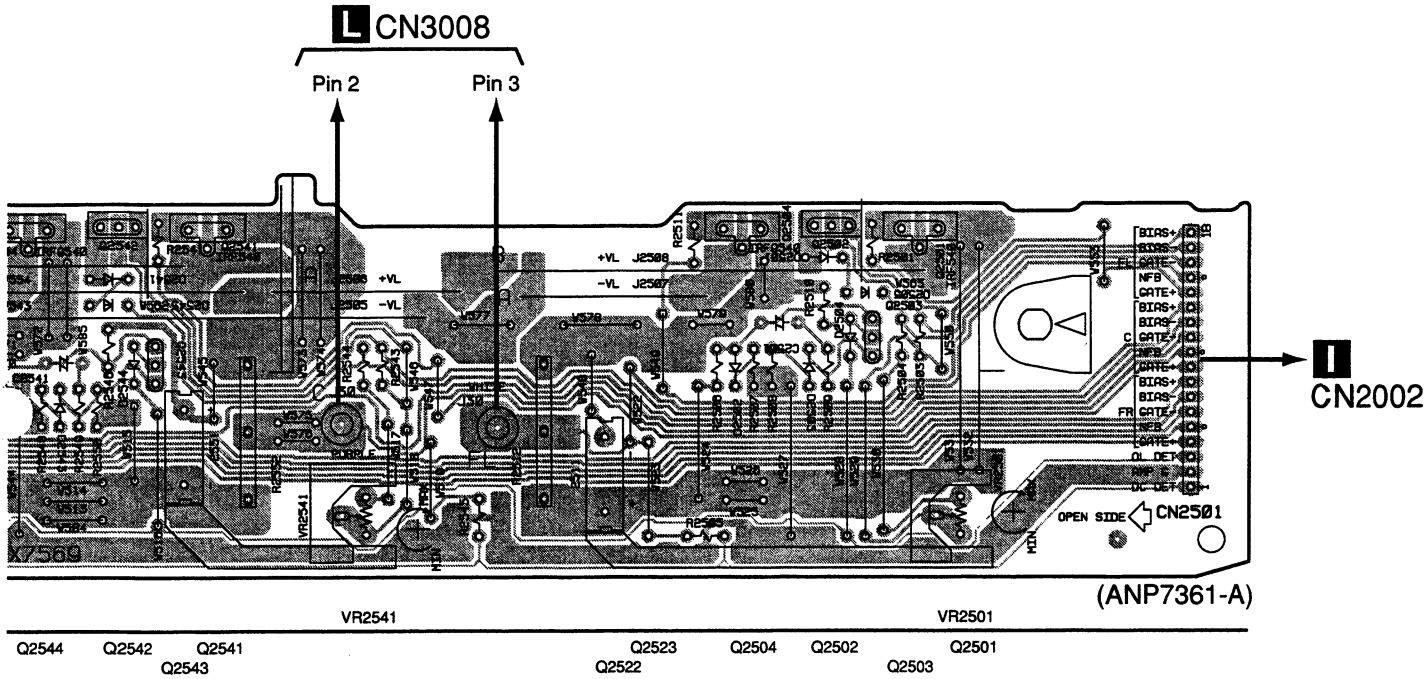

B

C

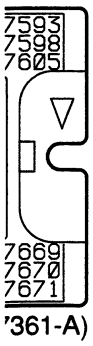

D

SIDE A

http://www.manualscenter.com

4.11 TRANS 2-1, TRANS 2-2 and TRANS 1 ASSYS

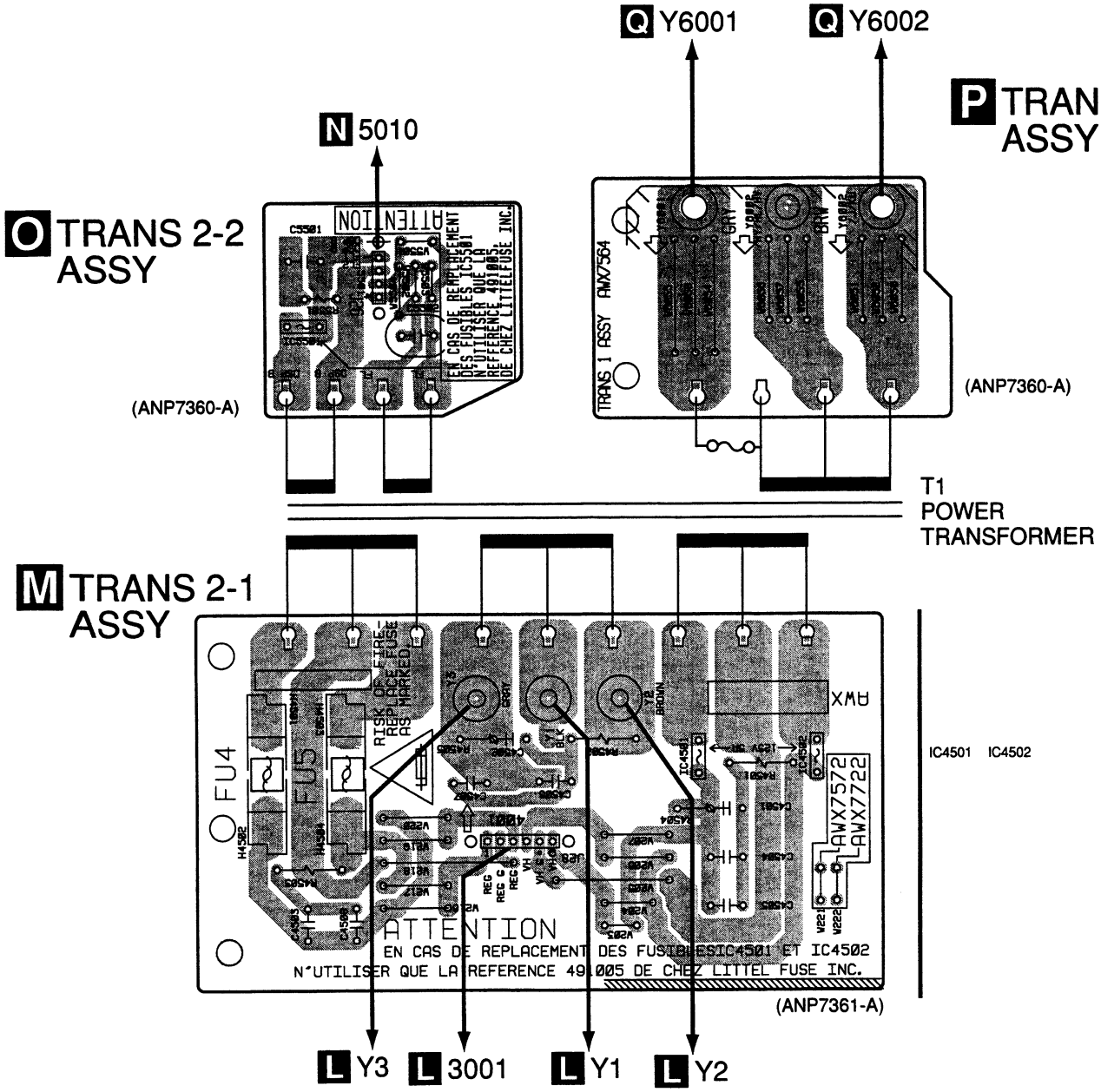

SIDE A

http://www.manualscenter.com

4.12 COMPONENT ASSY

R COMPONENT ASSY

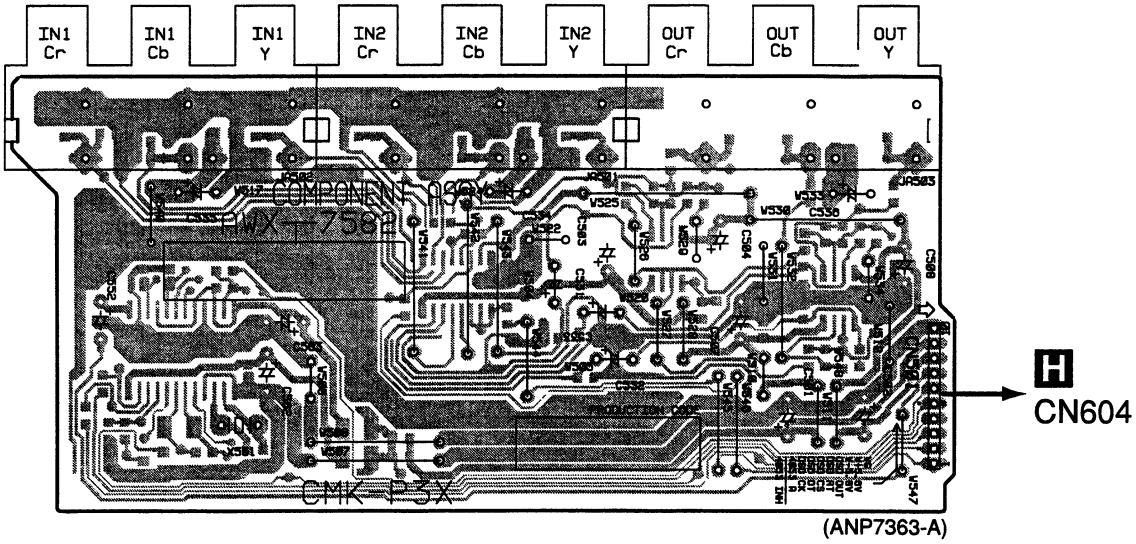

SIDE A

R COMPONENT ASSY

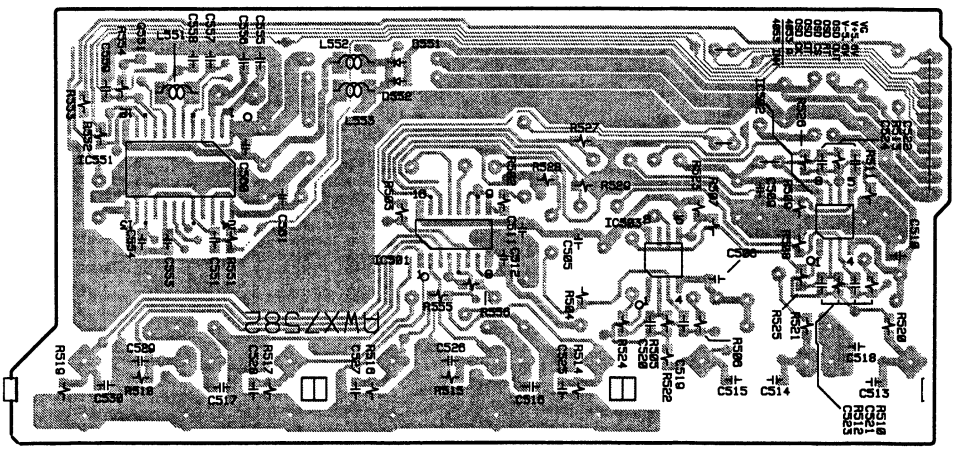

SIDE B

http://www.manualscenter.com

VSX-35TX, VSX-33TX

4.13 REGULATOR and PRIMARY ASSYS

N REGULATOR ASSY

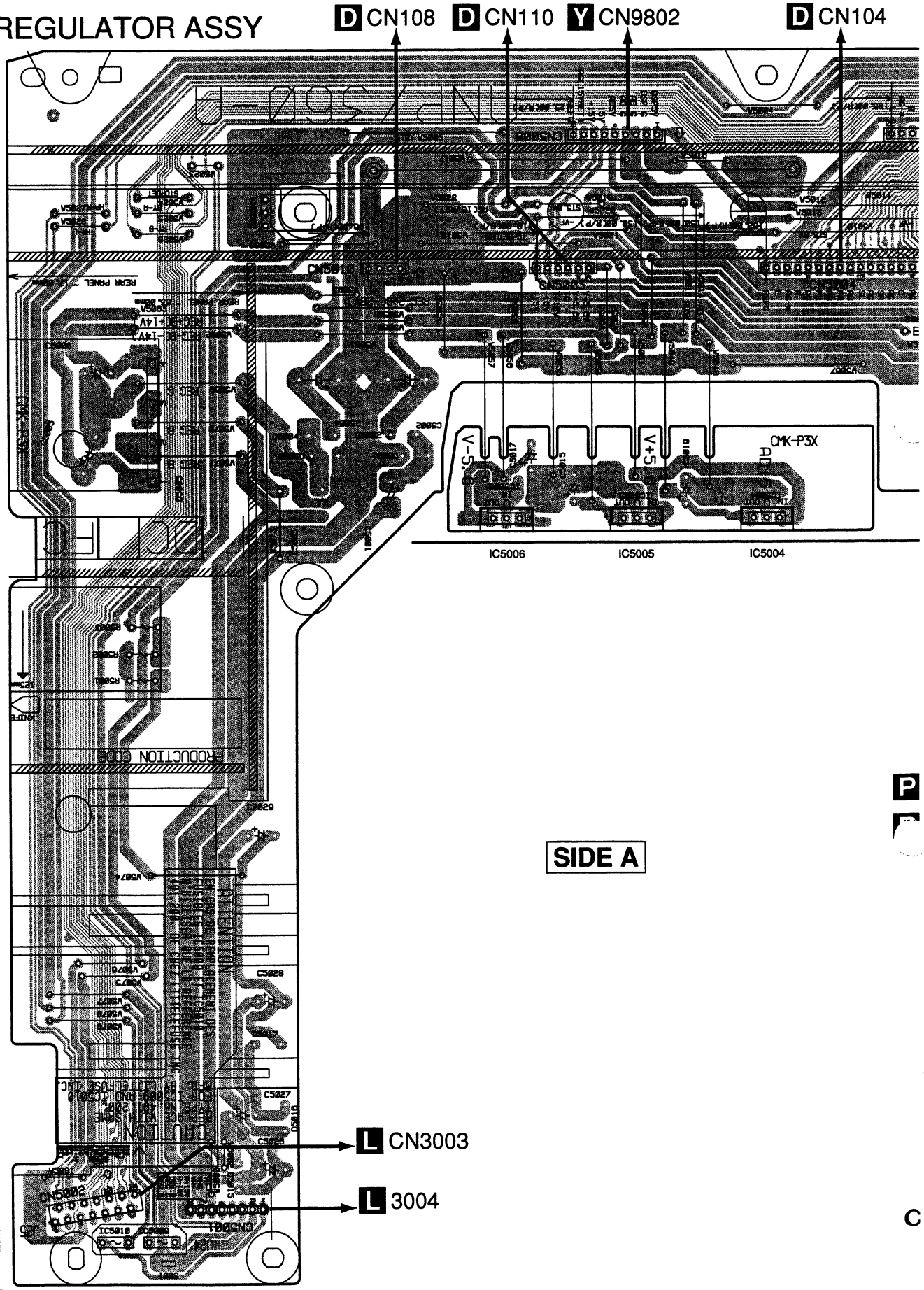

http://www.manualscenter.com

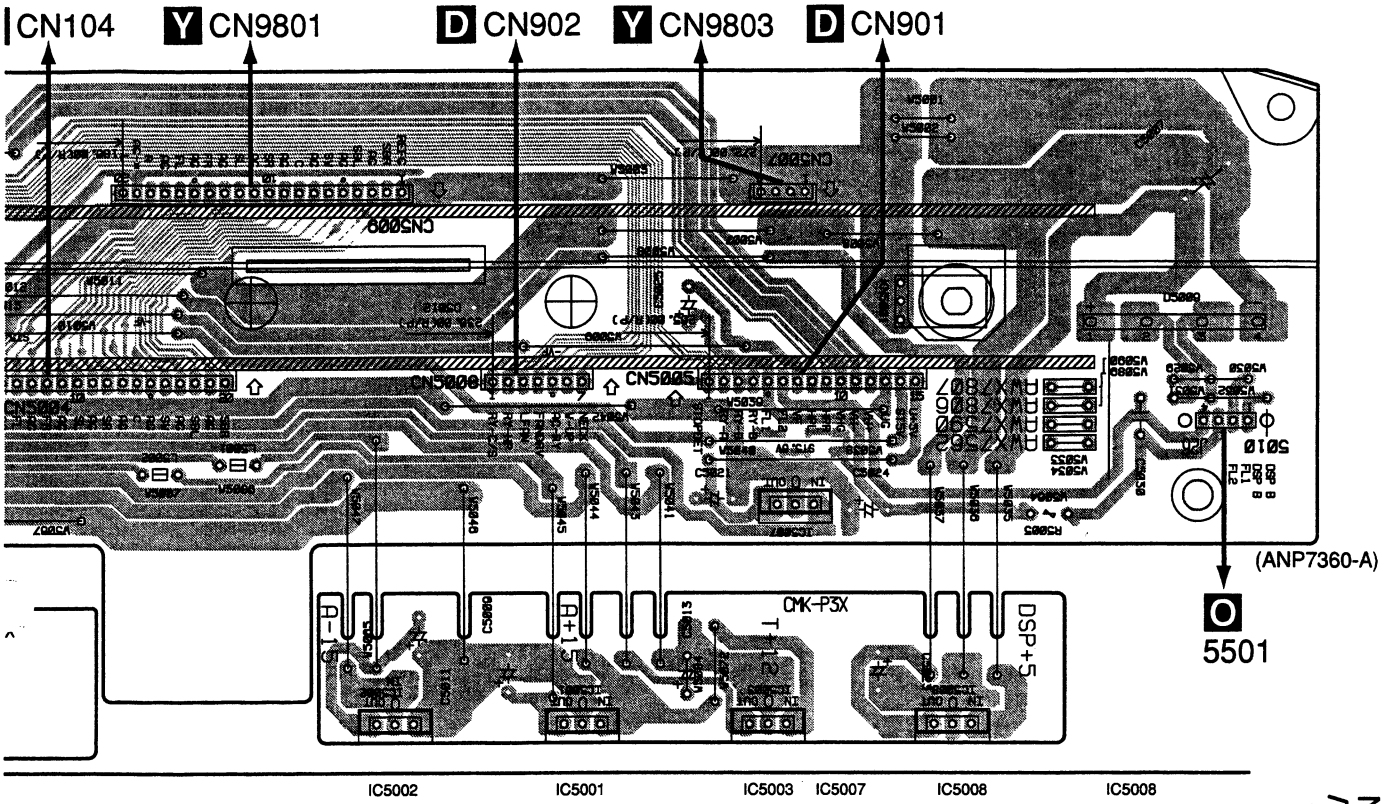

Q PRIMARY ASSY

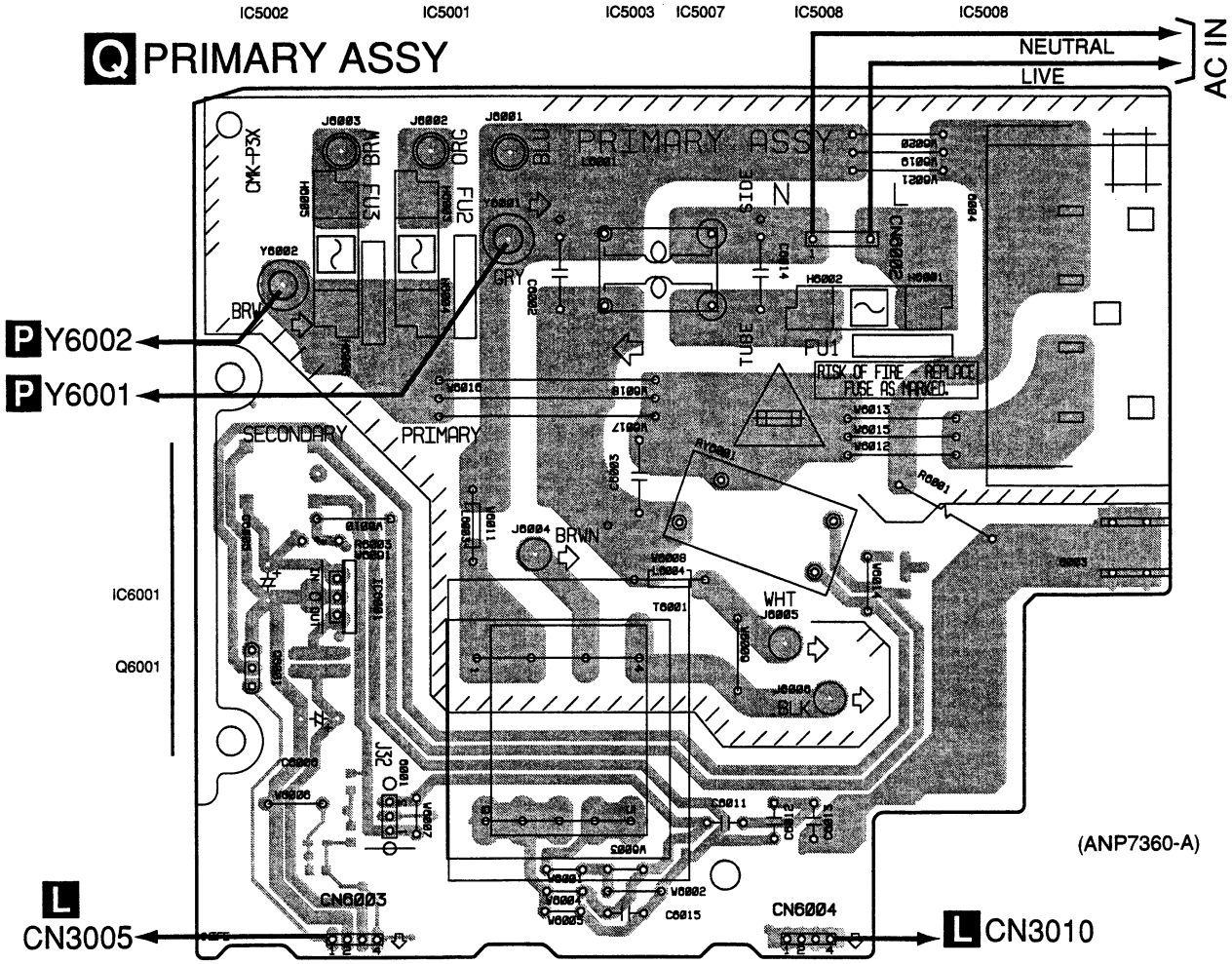

http://www.manualscenter.com

4.14 DISPLAY, VOLUME-CONT, HEADPHONE, FRONT AV and STANDBY ASSYS

T VOLUME-CONT ASSY

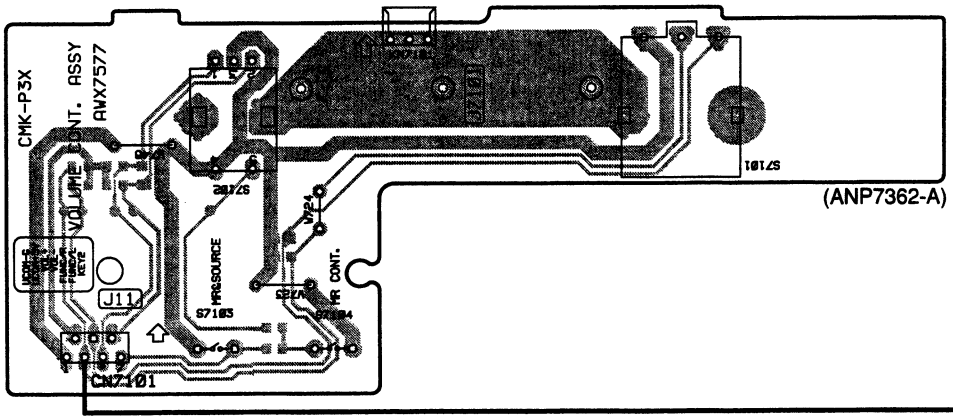

S DISPLAY ASSY

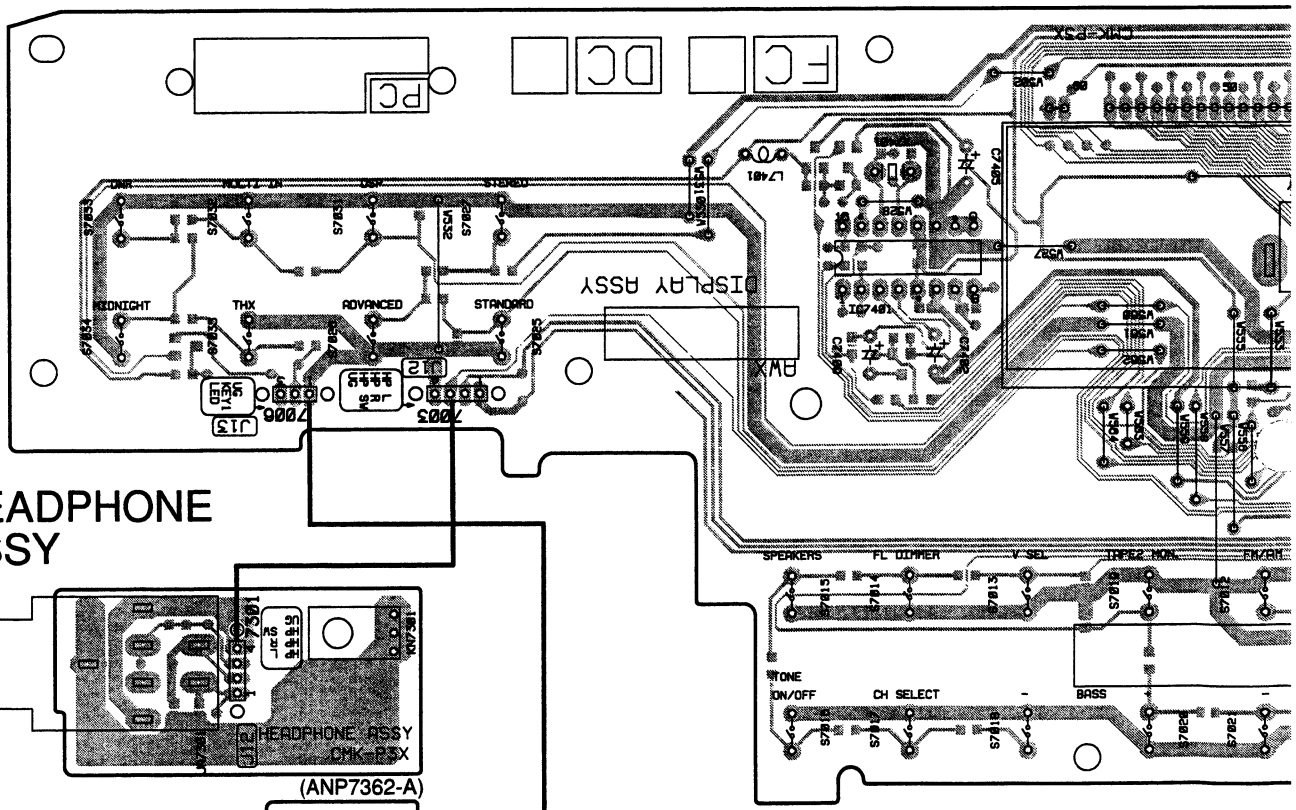

U HEADPHONE ASSY

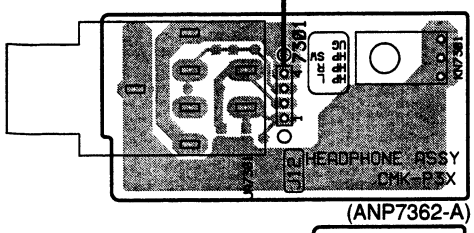

W STAND BY ASSY

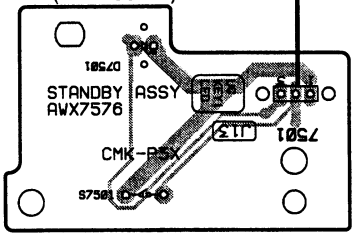

http://www.manualscenter.com

V FRONT AV ASSY

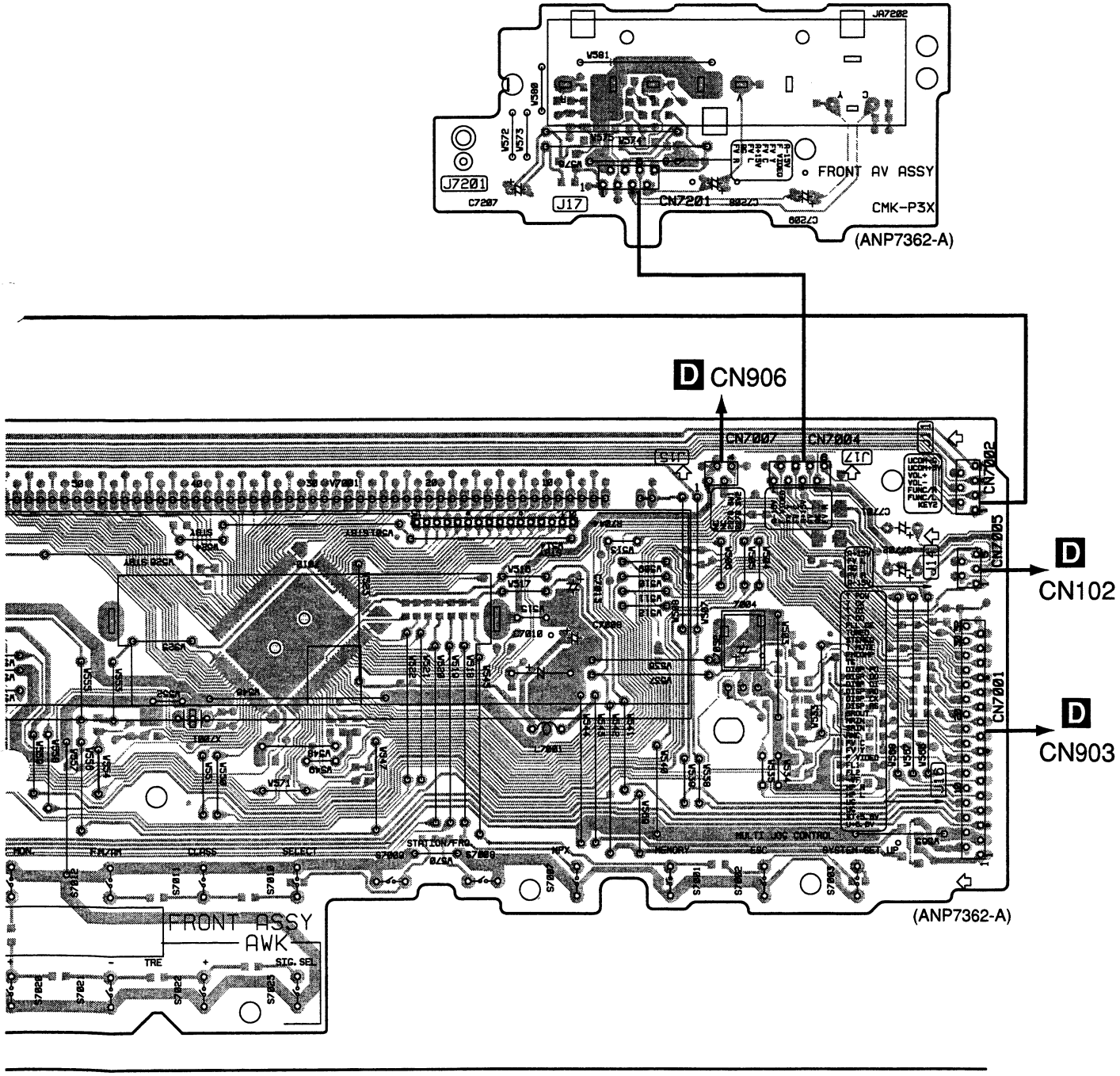

SIDE A

http://www.manualscenter.com

V FRONT AV ASSY

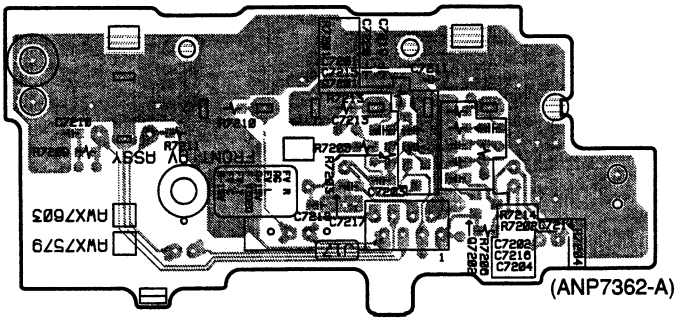

S DISPLAY ASSY

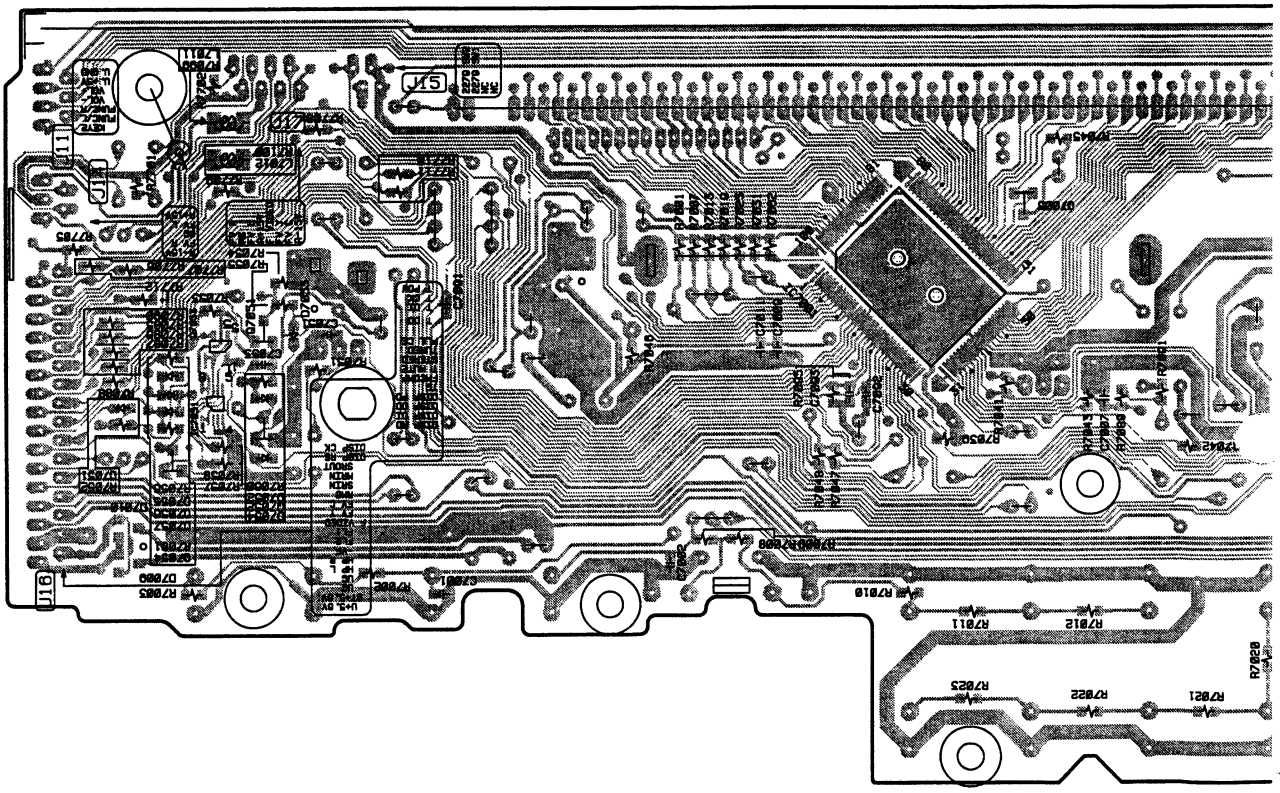

Q7054 Q7053 Q7051
IC7051 Q7052

IC7001 Q7005

SIDE B

http://www.manualscenter.com

A

T VOLUME-CONT ASSY

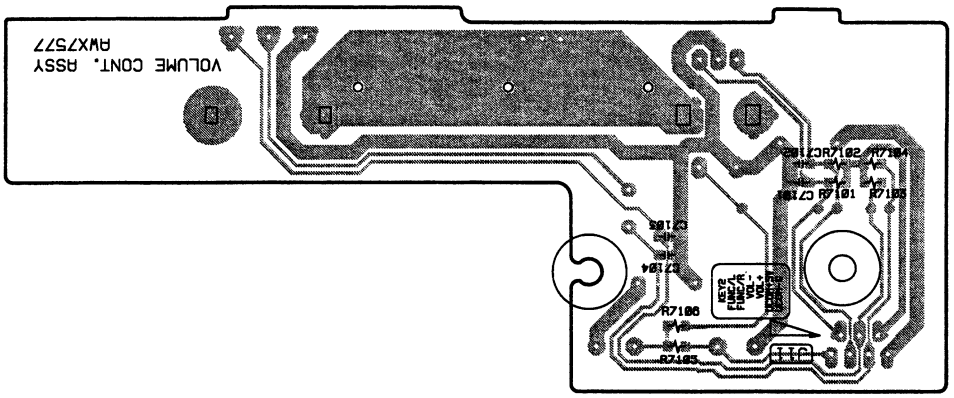

(ANP7362-A)

B

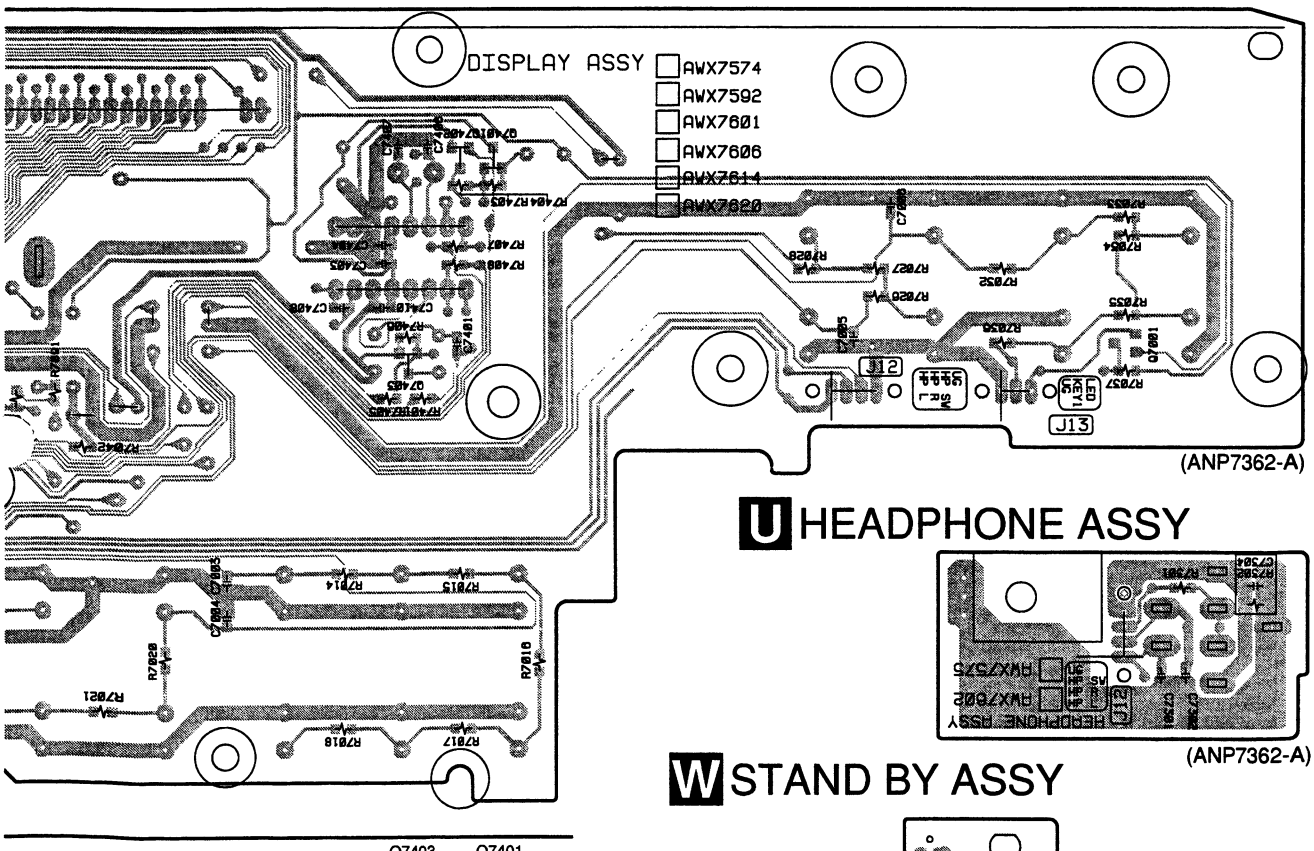

(ANP7362-A)

C

U HEADPHONE ASSY

(ANP7362-A)

W STAND BY ASSY

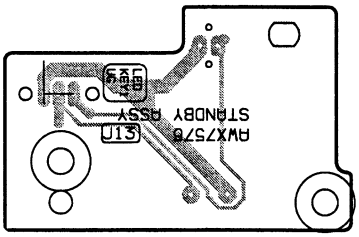

(ANP7362-A)

D

http://www.manualscenter.com

4.15 DSP and FRONT DIGIN ASSYS

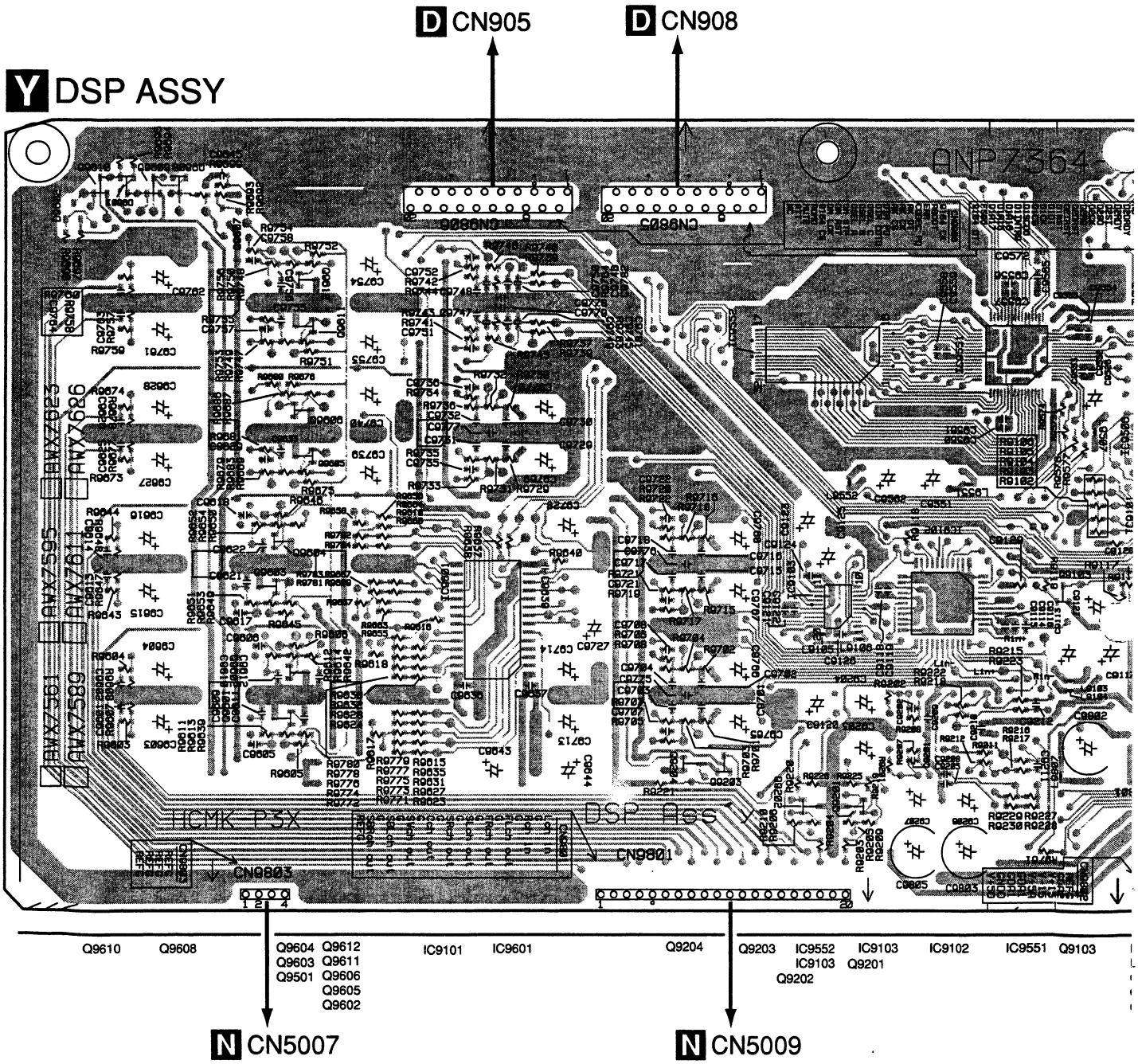

http://www.manualscenter.com

X FRONT DIGIN ASSY

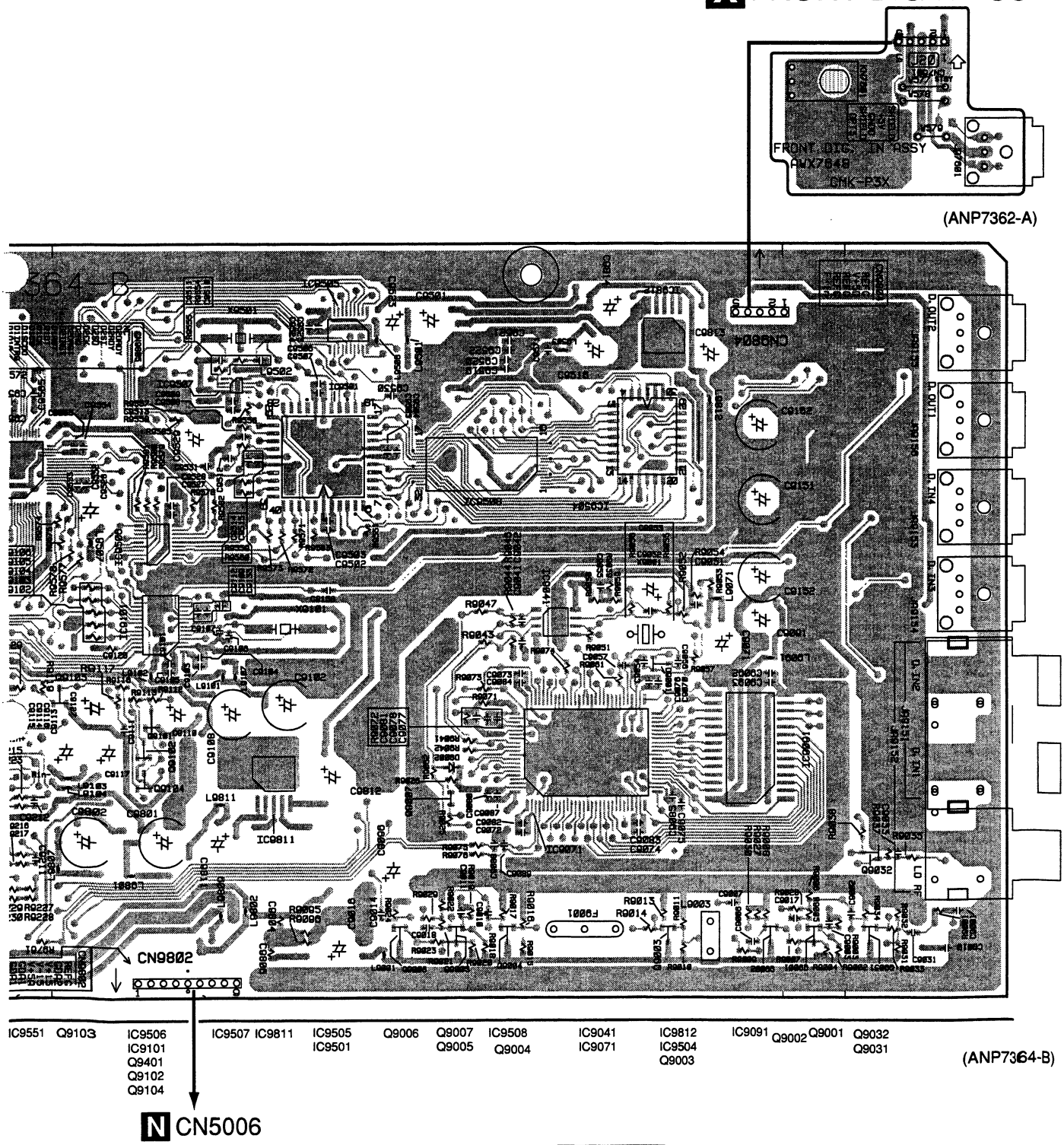

SIDE A

http://www.manualscenter.com

X FRONT DIGIN ASSY

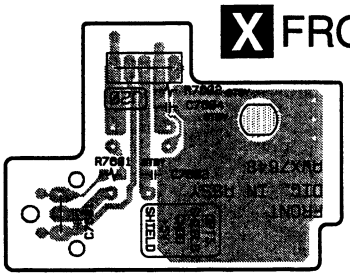

(ANP7362-A)

Y DSP ASSY

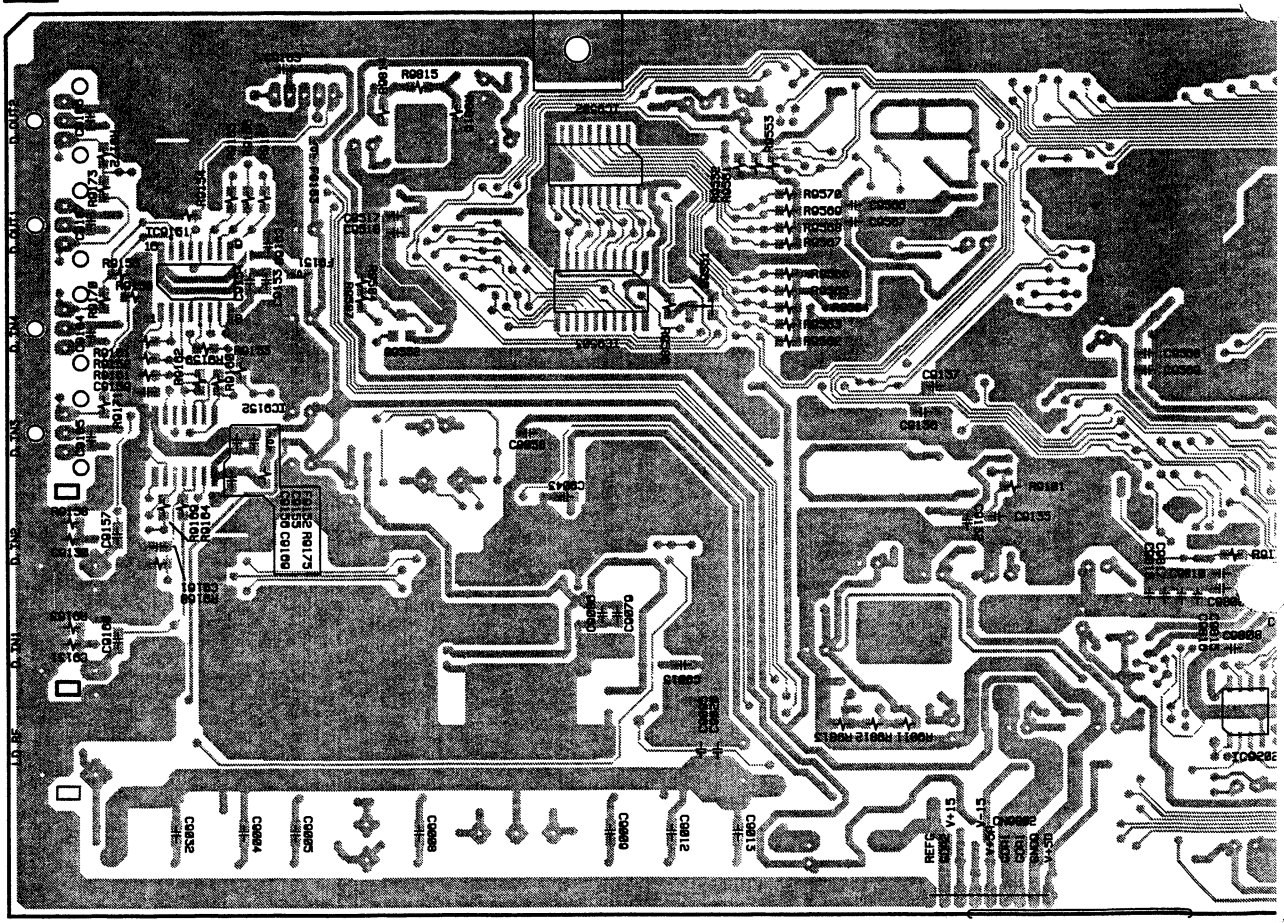

Q9610	Q9608	Q9604 Q9603 Q9501	Q9612 Q9611 Q9606 Q9605 Q9602	IC9101	IC9502 IC9503	Q9501	IC9202

http://www.manualscenter.com

A

B

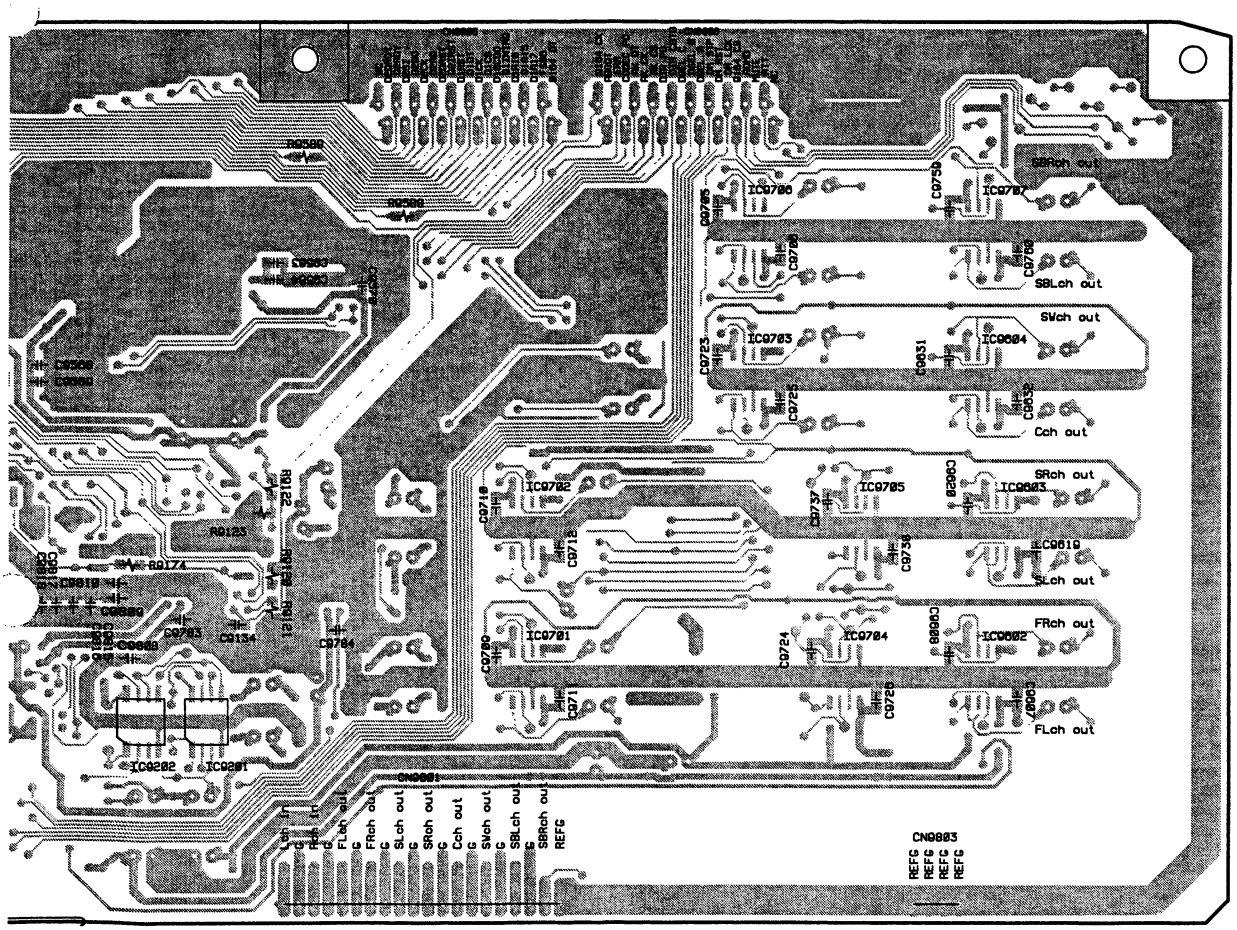

C

IC9202 IC9201

IC9702
IC9701

IC9706
IC9703

IC9705
IC9704

IC9702
IC9604
IC9603
IC9602

(ANP7364-B)

D

SIDE B

http://www.manualscenter.com

5. PCB PARTS LIST

NOTES: ●*Parts marked by "NSP" are generally unavailable because they are not in our Master Spare Parts List.*
●*The ⚠ mark found on some component parts indicates the importance of the safety factor of the part. Therefore, when replacing, be sure to use parts of identical designation.*
●*When ordering resistors, first convert resistance values into code form as shown in the following examples.*

Ex.1 When there are 2 effective digits (any digit apart from 0), such as 560 ohm and 47k ohm (tolerance is shown by J=5%, and K=10%).

560 Ω → 56 × 10¹ → 561 ..... RD1/4PU [5][6][1] J
47k Ω → 47 × 10³ → 473 ..... RD1/4PU [4][7][3] J
0.5 Ω → R50 ..... RN2H [R][5][0] K
1 Ω → 1R0 ..... RS1P [1][R][0] K

Ex.2 When there are 3 effective digits (such as in high precision metal film resistors).

5.62k Ω → 562 × 10¹ → 5621 ..... RN1/4PC [5][6][2][1] F

■LIST OF WHOLE PCB ASSEMBLIES

Mark	Symbol and Description	Part No.		Remarks
		VSX-35TX/KUXJI/CA	VSX-33TX/KUXJI/CA	
	FM/AM TUNER UNIT	AXQ7231	AXQ7231	
NSP	COMPLEX ASSY	AWK7592	AWK7613	
	├EX I/O ASSY	AWX7568	Not used	
	├5.1CH I/O ASSY	Not used	AWX7613	
	├A-CONNECTION ASSY	AWX7566	AWX7619	
	├TRANS 2-2 ASSY	AWX7565	AWX7720	
	├REGULATOR ASSY	AWX7562	AWX7562	
	├V-CONNECTION ASSY	AWX7567	AWX7717	
	├PRIMARY ASSY	AWX7563	AWX7563	
NSP	└TRANS 1 ASSY	AWX7564	AWX7564	
NSP	POWER ASSY	AWK7593	AWK7598	
	├INPUT ASSY	AWX7573	AWX7585	
	├FRONT AMP ASSY	AWX7569	AWX7569	
	├REAR AMP ASSY	AWX7570	AWX7570	
	├SP/PS ASSY	AWX7571	AWX7721	
	└TRANS 2-1 ASSY	AWX7572	AWX7572	
NSP	MAIN ASSY	AWK7591	AWK7612	
	├MAIN CONTROL ASSY	AWX7560	AWX7610	
	└DSP ASSY	AWX7561	AWX7611	
NSP	FRONT ASSY	AWK7594	AWK7614	
	├V-AMP ASSY	AWX7578	AWX7578	
	├S VIDEO ASSY	AWX7580	AWX7616	
	├COMPOSITE ASSY	AWX7581	AWX7617	
	├FRONT AV ASSY	AWX7579	AWX7579	
	├DISPLAY ASSY	AWX7574	AWX7614	
	├VOLUME-CONT ASSY	AWX7577	AWX7577	
	├HEADPHONE ASSY	AWX7602	AWX7602	
	├FRONT DIGIN ASSY	AWX7648	Not used	
	└STAND BY ASSY	AWX7576	AWX7576	
NSP	VIDEO ASSY	AWK7595	Not used	
	└COMPONENT ASSY	AWX7582	Not used	

C INPUT ASSY

AWX7573 and AWX7585 are constructed the same except for the following :

Mark	Symbol and Description	Part No.		Remarks
		AWX7573	AWX7585	
	Q1001, Q1002	2SC2878	Not used	
	D1051	1SS133	Not used	
	C1051	CGCYX103M16	Not used	
	R1013-R1016, R1051	RD1/4PU102J	Not used	
	R1017, R1018	RD1/4PU473J	Not used	
	CN1002 6P SOCKET	KP200TA6L	Not used	
	JA1004 2P PIN JACK	AKB7046	Not used	
	JA1051 MULTI ROOM JACK	AKN7014	Not used	

D MAIN CONTROL ASSY

AWX7560 and AWX7610 are constructed the same except for the following :

Mark	Symbol and Description	Part No.		Remarks
		AWX7560	AWX7610	
	IC101	M5220FP	Not used	
	IC103	TC9164AF	Not used	
	IC104	NJM4558MD	Not used	
	Q905	DTA124EK	Not used	
	C113, C114	CEAT100M50	Not used	
	C115, C116	CCSQCH181J50	Not used	
	C117, C118	CEAT470M25	Not used	
	C121, C122	CQMA822J50	Not used	
	C123, C124	CQMA242J50	Not used	
	C125, C126	CEAT2R2M50	Not used	
	C127, C128	CEJQ101M25	Not used	
	C133, C134, C911	CKSRYB103K50	Not used	
	C135, C136	CEAT1R0M50	Not used	
	C191-C193	CCSRCH101J50	Not used	
	R111, R112	RS1/10S0R0J	Not used	
	R113, R114, R117, R118, R129, R130, R139, R140	RS1/10S104J	Not used	
	R203, R204	RS1/10S104J	Not used	
	R115, R116	RS1/10S331J	Not used	
	R119, R120	RS1/10S511J	Not used	
	R121, R122	RS1/10S394J	Not used	
	R123, R124	RS1/10S303J	Not used	
	R125, R126, R133, R134	RS1/10S471J	Not used	
	R131, R132	RS1/10S474J	Not used	
	R135, R136, R934, R944-R946	RS1/16S102J	Not used	
	R923	Not used	RS1/16S103J	
	R924	RS1/16S103J	Not used	
	R933	RS1/16S473J	Not used	
	R990, R991	RS1/10S102J	Not used	
	CN103 9P PLUG	AKP7057	Not used	
	CN906 4P FFC CONNECTOR	52045-0445	Not used	
	JA151 2P PIN JACK	VKB1060	Not used	

E A-CONNECTION ASSY

AWX7566 and AWX7619 are constructed the same except for the following :

Mark	Symbol and Description	Part No.		Remarks
		AWX7566	AWX7619	
	IC1501	TC9215AF	Not used	
	IC1502	TC9459F	Not used	
	IC1503	NJM4558MD	Not used	
	IC1551	M62429FP	Not used	
	D1551	UDZS5.1B	Not used	
	C1501-C1504, C1517, C1518	CKSQYB103K50	Not used	
	C1507, C1508	CEAT100M50	Not used	
	C1511, C1512	CCSQCH560J50	Not used	
	C1515, C1516, C1551-C1553	CEAT100M50	Not used	
	C1541-C1543	CCSQCH101J50	Not used	
	C1554, C1555	CCSQCH101J50	Not used	
	C1556, C1557	CEAT1R0M50	Not used	
	R1503, R1504, R1511, R1512	RS1/10S104J	Not used	
	R1505, R1506, R1554, R1555	RS1/10S103J	Not used	
	R1507, R1508	RS1/10S472J	Not used	
	R1509, R1510	RS1/10S152J	Not used	
	R1541-R1545, R1552, R1553	RS1/10S102J	Not used	
	R1551	RS3LMF391J	Not used	
	R1569-R1574	RS1/10S0R0J	Not used	
	CN1552 9P SOCKET	AKP7068	Not used	
	CN1554 6P PLUG	KM200TA6	Not used	

F COMPOSITE ASSY

AWX7581 and AWX7617 are constructed the same except for the following :

Mark	Symbol and Description	Part No.		Remarks
		AWX7581	AWX7617	
	IC731	NJM2279M	Not used	
	IC751	TC4W53FU	Not used	
	Q701	2SA933S	Not used	
	D731	DAN202K	Not used	
	C707	CCSQCH181J50	Not used	
	C712, C734, C735	CEAT101M10	Not used	
	C713	CEAT101M16	Not used	
	C714, C732, C733, C736, C785, C786	CKSQYB473K50	Not used	
	C715	CCSQCH150J50	Not used	
	C737	CCSQCH470J50	Not used	
	R707	RS1/10S750J	Not used	
	R712	RS1/10S183J	Not used	
	R713	RS1/10S103J	Not used	
	R714	RS1/10S101J	Not used	
	R715	RD1/2VM201J	Not used	
	R733-R735, R766	RS1/10S102J	Not used	
	R767	RS1/10S104J	Not used	
	JA703	Not used	VKB1048	
	703 2P PIN JACK	AKB7017	Not used	

http://www.manualscenter.com

G S VIDEO ASSY

AWX7580 and AWX7616 are constructed the same except for the following :

Mark	Symbol and Description	Part No.		Remarks
		AWX7580	AWX7616	
	IC852	BU4053BCF	Not used	
	C854	CCSQCH151J50	Not used	
	C855, C856	CKSQYB103K50	Not used	
	R855	RS1/10S103J	Not used	
	R868-R870	RS1/10S102J	Not used	
	R883, R885	Not used	RS1/10S0R0J	
	R884	RS1/10S0R0J	Not used	

H V-CONNECTION ASSY

AWX7567 and AWX7717 are constructed the same except for the following :

Mark	Symbol and Description	Part No.		Remarks
		AWX7567	AWX7717	
	Q601	KRC103M	Not used	
	C601	CKSQYB103K50	Not used	
	R601	RS1/10S103J	Not used	
	CN604 10P PLUG	KM200TA10	Not used	

L SP/PS ASSY

AWX7571 and AWX7721 are constructed the same except for the following :

Mark	Symbol and Description	Part No.		Remarks
		AWX7571	AWX7721	
	L3111, L3112 BEAD FILTER	ATX1012	Not used	
	C3001, C3002	ACH7147	ACH7145	

O TRANS 2-2 ASSY

AWX7565 and AWX7720 are constructed the same except for the following :

Mark	Symbol and Description	Part No.		Remarks
		AWX7565	AWX7720	
	C5501, C5502	CQMA104J50	Not used	
	R5501	RD1/4MUF100J	Not used	

S DISPLAY ASSY

AWX7574 and AWX7614 are constructed the same except for the following :

Mark	Symbol and Description	Part No.		Remarks
		AWX7574	AWX7614	
	IC7051	TC7W53FU	Not used	
	Q7053	FM1A	Not used	
	Q7054	DTC124EK	Not used	
	D7054-D7057	1SS355	Not used	
	C7053	CKSQYB153K50	Not used	
	R7056	RS1/10S223J	Not used	
	R7057	RS1/10S392J	Not used	
	R7058, R7061	RS1/10S103J	Not used	
	CN7007 4P FFC CONNECTOR	52045-0445	Not used	

Y DSP ASSY

AWX7561 and AWX7611 are constructed the same except for the following :

Mark	Symbol and Description	Part No.		Remarks
		AWX7561	AWX7611	
	IC9103	CS4391	Not used	
	IC9602-IC9604, IC9701-IC9705	UPC4570G2	NJM4558MD	
	IC9706, IC9707	UPC4570G2	Not used	
	Q9611, Q9612	2SC3326	Not used	
	L9105, L9106 CHIP SOLID INDUCTOR	QTL1013	Not used	
	C9120	CEJA470M16	Not used	
	C9121, C9124	CKSRYB103K50	Not used	
	C9122	CCSRCH471J50	Not used	
	C9123, C9125	CEJA1R0M50	Not used	
	C9126	CKSRYB104K16	Not used	
	C9167	CKSQYF104Z50	Not used	
	C9705, C9706, C9759, C9760	CKSQYF104Z25	Not used	
	C9745, C9746, C9781, C9782	CKSRYB102K50	Not used	
	C9749-C9752	CCSRCH221J50	Not used	
	C9753, C9754	CEJA330M10	Not used	
	C9755, C9756	CKSRYB122K50	Not used	
	C9757, C9758	CCSRCH271J50	Not used	
	C9761, C9762	CEJA4R7M50	Not used	
	C9763, C9764	CKSRYB222K50	Not used	
	R9104	RS1/16S101J	RS1/16S331J	
	R9120, R9122	RS1/10S681J	Not used	
	R9121, R9749, R9750	RS1/10S562J	Not used	
	R9123	RS1/10S182J	Not used	
	R9154	RS1/10S104J	RS1/10S0R0J	
	R9173	RS1/10S0R0J	Not used	
	R9577	RS1/16S331J	Not used	
	R9737-R9742, R9753, R9754, R9763, R9764	RS1/10S153J	Not used	
	R9743-R9746, R9755, R9756	RS1/16S332J	Not used	
	R9747, R9748	RS1/16S122J	Not used	
	R9751, R9752	RS1/16S822J	Not used	
	R9757, R9758	RS1/16S474J	Not used	
	R9759, R9760	RS1/16S101J	Not used	
	CN9804 KR CONNECTOR	S5B-PH-K-S	Not used	
	JA9156 OPTICAL LINK OUT	GP1FA551TZ	Not used	

■ PCB PARTS LIST FOR VSX-35TX/KUXJI/CA UNLESS OTHERWISE NOTED

Mark	No.	Description	Part No.
A		**FM/AM TUNER UNIT**	
		SEMICONDUCTORS	
	IC201		BA1451F
	IC202		LC72131MD
	Q201,Q204,Q205		2SC2412K
	Q202		DTA124ES
	Q203		DTC124EK
	D201		1SS133
	D202		MTZJ5.1C
		COILS AND FILTERS	
	L201	FM COIL	ATE7003
	F202	FM CERAMIC FILTER	ATF-107
	F201	FM CERAMIC FILTER	ATF-119
	F203	AM CERAMIC FILTER	ATF7026

Mark	No.	Description	Part No.
		CAPACITORS	
	C206		CCSRCH100D50
	C212,C213,C226,C233-C235		CCSRCH101J50
	C240		CCSRCH101J50
	C231,C232		CCSRCH150J50
	C223		CEAT100M50
	C229		CEAT101M10
	C224		CEAT1R0M50
	C227		CEAT220M25
	C241		CEAT2R2M50
	C243		CEAT330M16
	C228		CEAT3R3M50
	C237		CEAT470M10
	C211		CEJA1R0M50
	C210		CEJA470M16
	C204,C238,C602		CKSRYB102K50

Mark	No.	Description	Part No.
	C101,C102,C208,C220,C239		CKSRYB103K50
	C242,C601		CKSRYB103K50
	C216,C217,C225		CKSRYB153K50
	C201,C205,C209,C214,C230		CKSRYB223K50
	C236,C603		CKSRYB223K50
	C221		CKSRYB224K10
	C202,C222		CKSRYB473K16
	C215		CKSRYB681K50

RESISTORS

	R211	RD1/4PU221J
	R221	RD1/4PU222J
	R233	RD1/4PU391J
	R243	RS1/10S0R0J
	R103	RS1/10S331J
	R104	RS1/10S391J
	Other Resistors	RS1/16S□□□J

OTHERS

	CN201 13P FFC CONNECTOR	52044-1345
	BN201 4P ANTENNA TERMINAL	AKA7003
	SHIELD CASE T	ANK7072
	SHIELD CASE B	ANK7073
	X201 CRYSTAL RESONATOR (7.2MHz)	ASS1093

B EX I/O ASSY (For VSX-35TX)

SEMICONDUCTORS

	IC1101-IC1104	UPC4570G2
	Q1151-Q1158	HN1C03F

CAPACITORS

	C1114,C1125-C1132	CEAT100M50
	C1109-C1113,C1115,C1116	CEAT4R7M50
	C1133-C1142,C1159,C1160	CKSQYB103K50

RESISTORS

	All Resistors	RS1/10S□□□J

OTHERS

	CN1112,CN1162 2P PIN JACK	AKB7008
	JA1113,JA1163 2P PIN JACK	AKB7046
	JA1111,JA1161 4P PIN JACK	AKB7048
	CN1102 5P SOCKET	AKP7066
	CN1101,CN1151 9P SOCKET	AKP7068

B 5.1CH I/O ASSY (For VSX-33TX)

SEMICONDUCTORS

	IC1101-IC1103	NJM4558MD
	Q1151-Q1156	HN1C03F

CAPACITORS

	C1114,C1125-C1130	CEAT100M50
	C1109-C1113	CEAT4R7M50
	C1133-C1138,C1141,C1142,C1159	CKSQYB103K50
	C1160	CKSQYB103K50

RESISTORS

	All Resistors	RS1/10S□□□J

OTHERS

	CN1112,CN1162 2P PIN JACK	AKB7008
	JA1111,JA1161 4P PIN JACK	AKB7048
	CN1102 5P SOCKET	AKP7066
	CN1101,CN1151 9P SOCKET	AKP7068

C INPUT ASSY

SEMICONDUCTORS

	Q1001,Q1002	2SC2878
	D1051	1SS133

CAPACITORS

	C1019,C1021,C1051	CGCYX103M16

RESISTORS

	All Resistors	RD1/4PU□□□J

OTHERS

	JA1004 2P PIN JACK	AKB7046
	JA1001-JA1003 4P PIN JACK	AKB7048
	JA1051 MULTI ROOM JACK	AKN7014
	CN1001 14P SOCKET	KP200TA14L
	CN1002 6P SOCKET	KP200TA6L

D MAIN CONTROL ASSY

SEMICONDUCTORS

	IC101	M5220FP
	IC104	NJM4558MD
	IC901	PD5587A
	IC107,IC109	TC9163AF
	IC103	TC9164AF
	IC102	TC9274F-001
	IC108	TC9482F
	IC106,IC110-IC112	UPC4570G2
	Q291	2SC1740S
	Q251,Q252	2SC2412K
	Q902,Q905	DTA124EK
	Q901	DTC143EK
	D254,D255,D901-D910	1SS355
	D301,D302	RB501V-40
	D292	UDZ11B
	D256	UDZS5.1B

COILS

	L901	LCTA2R2J3225
	L991-L993 NOISE FILTER	RTF1167

CAPACITORS

	C902 (0.22F/5.5V)	ACH7132
	C947-C949,C993	CCSQCH101J50
	C115,C116	CCSQCH181J50
	C159,C160	CCSQCH560J50
	C191-C193,C941-C946,C952	CCSRCH101J50
	C963,C964	CCSRCH101J50
	C171,C172,C183	CCSRCH560J50
	C113,C114,C131,C132	CEAT100M50
	C143,C144,C155,C156	CEAT100M50
	C163,C164,C167,C168	CEAT100M50

Mark	No.	Description	Part No.
	C175,C176,C179,C180		CEAT100M50
	C187,C188,C259-C261		CEAT100M50
	C135,C136		CEAT1R0M50
	C147,C148		CEAT220M50
	C903		CEAT221M10
	C125,C126,C905		CEAT2R2M50
	C921		CEAT331M10
	C117,C118		CEAT470M25
	C965		CEAT471M10
	C291		CEJA101M16
	C127,C128		CEJQ101M25
	C992		CKSQYB102K50
	C129,C130,C141,C142		CKSQYB103K50
	C161,C162,C165,C166		CKSQYB103K50
	C173,C174,C177,C178		CKSQYB103K50
	C189,C190,C901,C904,C920		CKSQYB103K50
	C299		CKSQYB104K25
	C991		CKSQYB221K50
	C298		CKSQYB223K50
	C292		CKSQYF225Z16
	C293		CKSRYB102K50
	C133,C134,C149,C150		CKSRYB103K50
	C195,C196,C257,C258,C294		CKSRYB103K50
	C911,C966,C967		CKSRYB103K50
	C184		CKSRYB333K16
	C910,C912		CKSRYB473K16
	C297,C906		CKSRYF105Z10
	C123,C124		CQMA242J50
	C121,C122		CQMA822J50

RESISTORS

	R292		RS1/16S0R0J
	R135,R136,R907,R918,R934		RS1/16S102J
	R941-R949,R955-R957		RS1/16S102J
	R165,R166,R177,R259-R262		RS1/16S103J
	R912,R922,R924		RS1/16S103J
	R199-R202,R257,R258,R910		RS1/16S104J
	R913,R914,R932,R935		RS1/16S104J
	R992,R993		RS1/16S104J
	R159,R160,R171,R172		RS1/16S152J
	R183,R184		RS1/16S152J
	R178		RS1/16S183J
	R984		RS1/16S392J
	R133,R134		RS1/16S471J
	R167,R168,R179,R180		RS1/16S472J
	R293,R905,R906,R933		RS1/16S473J
	R131,R132		RS1/16S474J
	R903		RS1/16S512J
	R911		RS1/16S683J
	R157,R158,R169,R170		RS1/16S751J
	R182		RS1/16S821J
	Other Resistors		RS1/10S□□□J

OTHERS

	X901	CERAMIC RESONATOR (15.7MHz)	ASS7032
	CN906	4P FFC CONNECTOR	52045-0445
	CN102	5P FFC CONNECTOR	52045-0545
	CN907	10P FFC CONNECTOR	52045-1045
	CN291	13P FFC CONNECTOR	52045-1345
	CN904,CN905,CN908	20P FFC CONNECTOR	52045-2045
	CN105	22P FFC CONNECTOR	52045-2245
	CN903	32P FFC CONNECTOR	52045-3245
	J901	4P SHIELD ASSY	ADX7347
	152	6P PIN JACK	AKB7012
	CN153	4P PIN JACK	AKB7015
	CN103	9P PLUG	AKP7057
	CN107	11P PLUG	AKP7058
	CN101,CN106	15P PLUG	AKP7060
	CN901	15P SOCKET	KP200TA15L
	CN104	20P SOCKET	KP200TA20L
	CN108	4P SOCKET	KP200TA4L
	CN110	6P SOCKET	KP200TA6L
	CN902	7P SOCKET	KP200TA7L
	JA991,JA992	REMOTE CONTROL JACK	RKN1004
	101	PCB BINDER	VEF1040
	JA151	2P PIN JACK	VKB1060

E A-CONNECTION ASSY

SEMICONDUCTORS

	IC1551		M62429FP
	IC1503		NJM4558MD
	IC1501		TC9215AF
	IC1502		TC9459F
	D1551		UDZS5.1B

CAPACITORS

	C1541-C1543,C1554,C1555		CCSQCH101J50
	C1511,C1512		CCSQCH560J50
	C1507,C1508,C1515,C1516		CEAT100M50
	C1551-C1553		CEAT100M50
	C1556,C1557		CEAT1R0M50
	C1501-C1504,C1517,C1518		CKSQYB103K50

RESISTORS

	R1551		RS3LMF391J
	Other Resistors		RS1/10S□□□J

OTHERS

	CN1505	5P PLUG	AKP7055
	CN1501,CN1503	9P PLUG	AKP7057
	CN1552	9P SOCKET	AKP7068
	CN1502	11P SOCKET	AKP7069
	CN1504,CN1551	15P SOCKET	AKP7071
	CN1553	14P PLUG	KM200TA14
	CN1554	6P PLUG	KM200TA6
	1501	PCB BINDER	VEF1040

F COMPOSITE ASSY

SEMICONDUCTORS

	IC731		NJM2279M
	IC701		NJM2296M
	IC751		TC4W53FU
	Q701		2SA933S
	D701,D731		DAN202K

Mark	No.	Description	Part No.
CAPACITORS			
	C715		CCSQCH150J50
	C705-C707,C731		CCSQCH181J50
	C737		CCSQCH470J50
	C701-C704,C710-C712		CEAT101M10
	C734,C735,C781,C782		CEAT101M10
	C713		CEAT101M16
	C708,C709,C714,C732,C733		CKSQYB473K50
	C736,C785,C786,C793		CKSQYB473K50
RESISTORS			
	R715		RD1/2VM201J
	Other Resistors		RS1/10S□□□J
OTHERS			
	703	2P PIN JACK	AKB7017
	JA702,JA704	3P PIN JACK	AKB7056
	CN701	12P SOCKET	KP200TA12L

G S VIDEO ASSY

Mark	No.	Description	Part No.
SEMICONDUCTORS			
	IC831		BU4051BCF
	IC852		BU4053BCF
	IC801,IC802		NJM2296M
	Q852,Q853		2SA933S
	Q833,Q834		IMH11
	Q831		IMZ1A
	D801,D802		1SS355
CAPACITORS			
	C857		CCSQCH100D50
	C858		CCSQCH150J50
	C854		CCSQCH151J50
	C815-C818,C861,C862		CCSQCH181J50
	C809		CCSQCH330J50
	C801,C803,C805,C807		CEAT101M10
	C819-C822,C863,C881,C882		CEAT101M10
	C866,C868		CEAT101M16
	C831-C836,C855,C856		CKSQYB103K50
	C893,C894		CKSQYB103K50
	C810-C814,C859,C864,C865		CKSQYB104K25
	C802,C804,C806,C808		CKSQYB473K50
	C823-C826,C867,C869		CKSQYB473K50
RESISTORS			
	R864		RD1/2VM201J
	R859		RD1/4VM471J
	Other Resistors		RS1/10S□□□J
OTHERS			
	CN802,CN803	4P MINI DIN SOCKET	AKP7020
	CN801	4P MINI DIN SOCKET	AKP7043
	CN804	11P SOCKET	KP200TA11L

H V-CONNECTION ASSY

Mark	No.	Description	Part No.
SEMICONDUCTOR			
	Q601		KRC103M
CAPACITOR			
	C601		CKSQYB103K50
RESISTORS			
	All Resistors		RS1/10S□□□J
OTHERS			
	CN601	20P FFC CONNECTOR	52044-2045
	CN604	10P PLUG	KM200TA10
	CN603	11P PLUG	KM200TA11
	CN602	12P PLUG	KM200TA12

I V-AMP ASSY

Mark	No.	Description	Part No.
SEMICONDUCTORS			
	IC2201		BU4052BCF
	Q2003,Q2023,Q2043,Q2103,Q2123		2SA933S
	Q2004,Q2007,Q2024,Q2027,Q2044		2SA970
	Q2047,Q2104,Q2107,Q2124,Q2127		2SA970
	Q2252,Q2253		2SC1740S
	Q2005,Q2006,Q2025,Q2026		2SC2240
	Q2045,Q2046,Q2105,Q2106		2SC2240
	Q2125,Q2126,Q2251		2SC2240
	Q2008,Q2028,Q2048,Q2108,Q2128		2SC2878
	Q2001,Q2021,Q2041,Q2101,Q2121		FMS3
	Q2002,Q2022,Q2042,Q2102,Q2122		FMW4
	D2001,D2002,D2004,D2005		1SS355
	D2021,D2022,D2024,D2025		1SS355
	D2041,D2042,D2044,D2045		1SS355
	D2101,D2102,D2104,D2105		1SS355
	D2121,D2122,D2124,D2125		1SS355
	D2201-D2208		1SS355
	D2003,D2023,D2043,D2103,D2123		UDZS6.8B
	D2006,D2026,D2046,D2106,D2126		UDZS8.2B
CAPACITORS			
	C2011,C2012,C2031,C2032		CCCSL181K2H
	C2051,C2052,C2111,C2112		CCCSL181K2H
	C2131,C2132		CCCSL181K2H
	C2009,C2029,C2049,C2109,C2129		CCCSL5R0C2H
	C2004,C2024,C2044,C2104,C2124		CCSQCH101J50
	C2002,C2022,C2042,C2102,C2122		CCSQCH221J50
	C2006,C2007,C2026,C2027		CCSQCH560J50
	C2046,C2047,C2106,C2107		CCSQCH560J50
	C2126,C2127		CCSQCH560J50
	C2001,C2021,C2041,C2101,C2121		CEAT100M50
	C2005,C2008,C2025,C2028,C2045		CEAT101M16
	C2048,C2105,C2108,C2125,C2128		CEAT101M16
	C2161,C2162		CEAT221M50
	C2252		CEAT331M10
	C2010,C2030,C2050,C2110,C2130		CEAT470M16
	C2013,C2033,C2053,C2113,C2133		CEAT470M50
	C2151-C2155		CKSQYB222K50
	C2003,C2023,C2043,C2103,C2123		CKSQYB332K50
	C2251		CKSQYF223Z50
	C2201,C2202		CKSQYF225Z16

http://www.manualscenter.com

Mark	No.	Description	Part No.
RESISTORS			
	R2018,R2038,R2058,R2118,R2138		RD1/4MUF473J
⚠	R2012,R2032,R2132		RS1/10S101J
⚠	R2013,R2014,R2033,R2034		RS1/10S121J
⚠	R2053,R2054,R2113,R2114		RS1/10S121J
⚠	R2133,R2134		RS1/10S121J
	Other Resistors		RS1/10S□□□J
OTHERS			
	CN2101	13P FFC CONNECTOR	52045-1345
	CN2001	22P FFC CONNECTOR	52045-2245
	CN2002	18P SOCKET	KP200TA18L

J FRONT AMP ASSY

Mark	No.	Description	Part No.
SEMICONDUCTORS			
	Q2503,Q2523,Q2543		2SA970
	Q2502,Q2522,Q2542		2SC4137
⚠	Q2501,Q2521,Q2541		IRF540A
⚠	Q2504,Q2524,Q2544		IRF9540A
	D2501-D2505,D2521-D2525		1SS133
	D2541-D2545		1SS133
CAPACITORS			
	C2501,C2521,C2541		CEANPR22M50
	C2551,C2552		CEAT330M2A
RESISTORS			
⚠	R2512,R2532,R2552 (0.05Ω/5W×2)		ACN7097
⚠	R2506,R2510,R2526,R2530,R2546		RD1/4PUF391J
⚠	R2550		RD1/4PUF391J
⚠	R2501,R2511,R2521,R2531,R2541		RD1/4PUF680J
⚠	R2551		RD1/4PUF680J
	VR2501,VR2521,VR2541 (470Ω)		ACP1067
	Other Resistors		RD1/4PU□□□J
OTHERS			
	CN2501	18P PLUG	KM200TA18

K REAR AMP ASSY

Mark	No.	Description	Part No.
SEMICONDUCTORS			
	Q2603,Q2623		2SA970
	Q2602,Q2622		2SC4137
⚠	Q2601,Q2621		IRF540A
⚠	Q2604,Q2624		IRF9540A
	D2601-D2605,D2621-D2625		1SS133
CAPACITORS			
	C2601,C2621		CEANPR22M50
	C2651,C2652		CEAT220M2A
RESISTORS			
⚠	R2612,R2632 (0.05Ω/5W×2)		ACN7097
⚠	R2606,R2610,R2626,R2630		RD1/4PUF391J
⚠	R2601,R2611,R2621,R2631		RD1/4PUF680J
	VR2601,VR2621 (470Ω)		RCP1135
	Other Resistors		RD1/4PU□□□J
OTHERS			
	CN2601	13P FFC CONNECTOR	52045-1345
	2602	PCB BINDER	VEF1040

L SP/PS ASSY

Mark	No.	Description	Part No.
SEMICONDUCTORS			
⚠	Q3302		2SA1837
⚠	Q3301		2SC4793
	Q3304		KRA101M
	Q3005,Q3156-Q3159		KRA103M
	Q3151-Q3155,Q3303		KRC101M
	Q3305		KRC103M
	D3051,D3053,D3055,D3057,D3060		1SS133
⚠	D3001,D3002		D5SBA20
	D3309,D3310		MTZJ13C
	D3313		MTZJ16B
	D3305-D3308		MTZJ18C
⚠	D3301-D3304,D3311,D3312		S5688G
COILS			
	L3101-L3105	AF CHOKE COIL	ATH1053
	L3111,L3112	BEAD FILTER	ATX1012
RELAYS			
	RY3101-RY3105		ASR7026
CAPACITORS			
	C3001,C3002 (22000μF/56V)		ACH7147
	C3305,C3306		CEAT101M50
	C3307,C3308		CEAT221M50
	C3118		CEAT470M50
	C3303,C3304		CEAT471M63
	C3101-C3105		CFTYA104J50
	C3111-C3117		CQHA102J2A
RESISTORS			
	R3151-R3155		RD1/2PM471J
⚠	R3305,R3306		RD1/4PMF332J
	R3001,R3002		RD1/4PMF473J
⚠	R3101-R3105		RD1/4PMF4R7J
⚠	R3106-R3110		RS1LMF4R7J
⚠	R3131,R3132		RS2LMF331J
	Other Resistors		RD1/4PU□□□J
OTHERS			
	3001	6P CABLE HOLDER	51048-0600
	3004	8P CABLE HOLDER	51048-0800
	CN3003	14P FFC CONNECTOR	52045-1445
	CN3101	8P SPEAKER TERMINAL	AKE7058
	CN3102	6P SPEAKER TERMINAL	AKE7060
	3013,3014,3303,3304	SCREW	BBZ30P080FZK
	CN3005,CN3010	4P PLUG	KM200TA4

Mark	No.	Description	Part No.

M TRANS 2-1 ASSY

SEMICONDUCTORS

⚠	IC4501,IC4502 (5A)		AEK7019

CAPACITOR

	C4502		CQMA333K2E

RESISTOR

	R4502		RFA1/4PS220J

OTHERS

	4001	6P CABLE HOLDER	51048-0600
	H4501-H4504	FUSE HOLDER	AKR7001

N REGULATOR ASSY

SEMICONDUCTORS

⚠	IC5009,IC5010 (200mA)		AEK7023
⚠	IC5004,IC5008		NJM78M05FA
⚠	IC5003		NJM78M12FA
⚠	IC5001		NJM78M15FA
⚠	IC5005,IC5007		NJM78M56FA
⚠	IC5006		NJM79M05FA
⚠	IC5002		NJM79M15FA
	D5010		1SS355
⚠	D5005,D5009		D3SBA20(B)
⚠	D5012		MTZJ6.2B
⚠	D5001-D5004		S5566G(TPB2)
	D5011		UDZS5.1B

CAPACITORS

	C5015,C5017		CEAT101M10
	C5013,C5025		CEAT101M25
	C5021		CEAT221M10
	C5001,C5003,C5006		CEAT222M25
	C5002,C5004		CEAT222M35
	C5019		CEAT331M10
	C5005		CEAT332M25
	C5024		CEAT470M50
	C5023		CEAT471M10
	C5009,C5011		CEAT471M25
	C5007		CEAT472M16
	C5034		CKSQYB102K50
	C5008,C5010,C5012,C5014,C5016		CKSQYB103K50
	C5018,C5020,C5022,C5031,C5035		CKSQYB103K50
	C5030		CQMA104J50

RESISTORS

	R5005		RD1/2VM1R0J
	Other Resistors		RS1/10S□□□J

OTHERS

	5010	4P CABLE HOLDER	51048-0400
	CN5002	14P FFC CONNECTOR	52045-1445
	CN5001	8P FFC CONNECTOR	52147-0810
	CN5005	15P PLUG	KM200TA15
	CN5004,CN5009	20P PLUG	KM200TA20
	CN5007,CN5010	4P PLUG	KM200TA4
	CN5003	6P PLUG	KM200TA6
	CN5008	7P PLUG	KM200TA7
	CN5006	9P PLUG	KM200TA9
	KN5002	EARTH METAL FITTING	VNF1084

Mark	No.	Description	Part No.

O TRANS 2-2 ASSY

SEMICONDUCTOR

⚠	IC5501 (5A)		AEK7019

CAPACITORS

⚠	C5501,C5502		CQMA104J50

RESISTOR

⚠	R5501		RD1/4MUF100J

OTHERS

	5501	4P CABLE HOLDER	51048-0400

Q PRIMARY ASSY

SEMICONDUCTORS

⚠	IC6001		NJM78M56FA
	Q6001		KRC101M
	D6005-D6007		1SS355
⚠	D6001		S1WB(A)60SD
	D6008		UDZS5.1B

COILS

⚠	L6001	LINE FILTER	ATF7018
	L6003,L6004	BEAD FILTER	ATX1012

TRANSFORMER

⚠	T6001		ATT7043

RELAY

⚠	RY6001		ASR7025

CAPACITORS

⚠	C6002 (0.01μF/AC275V)		ACE7013
⚠	C6003 (10000pF/AC250V)		ACG7033
	C6005		CEAT102M25
	C6006		CEAT221M25
	C6015		CQMA104J50

RESISTORS

⚠	R6001 (2.2MΩ, 1/2W)		RCN1080
	R6003		RD1/2VM101J
	Other Resistors		RS1/10S□□□J

OTHERS

	6004	AC SOCKET	AKP7136
	H6001,H6002	FUSE CLIP	AKR7001
	CN6003,CN6004	4P SOCKET	KP200TA4L
⚠	CN6002	AC CORD SOCKET	RKP1751
	6003	SCREW TERMINAL	VNE1948

R COMPONENT ASSY

SEMICONDUCTORS

	IC551	LC74782M-9011
	IC501	TC74HC4053AF
	IC502,IC503	TK15420M
	Q551	DTC124EK
	D551,D552	1SS355

VSX-35TX, VSX-33TX

Mark	No.	Description	Part No.
COILS			
	L552,L553		LCTA100J3225
	L551		LCTA330J3225
CAPACITORS			
	C551,C559		CCSQCH101J50
	C555		CCSQCH150J50
	C556		CCSQCH180J50
	C557,C558		CCSQCH240J50
	C513-C515		CCSQCH470J50
	C501-C504,C507,C508,C552		CEAT101M10
	C562,C563		CEAT101M10
	C505,C506,C509-C512,C518		CKSQYB103K50
	C553,C554,C560,C561		CKSQYB473K50
RESISTORS			
	All Resistors		RS1/10S□□□J
OTHERS			
	X551	CRYSTAL RESONATOR (14.31818MHz)	ASS1056
	JA501-JA503	3P PIN JACK	AKB7124
	CN501	10P SOCKET	KP200TA10L

S DISPLAY ASSY

Mark	No.	Description	Part No.
SEMICONDUCTORS			
	IC7001		PD5588A
	IC7051		TC7W53FU
	Q7051		2SA1037K
	Q7001,Q7052,Q7054		DTC124EK
	Q7053		FMA1A
	D7051-D7057		1SS355
	D7009,D7010		DAN202K
COIL			
	L7001		LFA2R2J
SWITCHES			
	S7001-S7003,S7007-S7023		ASG7013
	S7025-S7027,S7031-S7035		ASG7013
CAPACITORS			
	C7010 (0.22μF/5.5V)		ACH7132
	C7007,C7092,C7093		CCSQCH101J50
	C7701,C7702		CEAT100M50
	C7008,C7013,C7052		CEJA101M6R3
	C7001-C7006,C7091		CKSQYB102K50
	C7051		CKSQYB103K50
	C7053		CKSQYB153K50
	C7009		CKSQYB473K50
RESISTORS			
	R7044		RA15T104J
	Other Resistors		RS1/10S□□□J
OTHERS			
	X7001	CERAMIC RESONATOR (7.2MHz)	ASS7018
	7006	3P CABLE HOLDER	51048-0300
	7003	4P CABLE HOLDER	51048-0400
	CN7007	4P FFC CONNECTOR	52045-0445
	CN7005	5P FFC CONNECTOR	52045-0545
	CN7002	7P FFC CONNECTOR	52045-0745
	CN7004	8P FFC CONNECTOR	52045-0845
	CN7001	32P FFC CONNECTOR	52045-3245
	V7001	FL TUBE	AAV7076
	7010	FL HOLDER	VNF1085

T VOLUME-CONT ASSY

Mark	No.	Description	Part No.
SWITCHES			
	S7103,S7104		ASG7013
	S7101		ASX7004
	S7102		ASX7036
CAPACITORS			
	C7101-C7104		CKSQYB103K50
RESISTORS			
	All Resistors		RS1/10S□□□J
OTHERS			
	CN7101	7P FFC CONNECTOR	52045-0745
	KN7101	EARTH METAL FITTING	VNF1084

U HEADPHONE ASSY

Mark	No.	Description	Part No.
CAPACITORS			
	C7304		CKSQYB103K50
	C7301,C7302		CKSQYB392K50
RESISTORS			
	All Resistors		RS1/10S□□□J
OTHERS			
	7301	4P CABLE HOLDER	51048-0400
	JA7301	HEADPHONE JACK	RKB1014
	KN7301	EARTH METAL FITTING	VNF1084

V FRONT AV ASSY

Mark	No.	Description	Part No.
SEMICONDUCTORS			
	Q7201,Q7202		2SC2412K
CAPACITORS			
	C7203,C7204		CCSQCH101J50
	C7201,C7202,C7215,C7216		CCSQCH271J50
	C7208,C7209		CEJA101M10
	C7207		CEJA1R0M50
	C7220		CKSQYB102K50
	C7210,C7217-C7219		CKSQYB103K50
	C7211		CKSQYB104K25
	C7213,C7214		CKSQYB105K10
RESISTORS			
	All Resistors		RS1/10S□□□J
OTHERS			
	CN7201	8P FFC CONNECTOR	52044-0845
	JA7202	FRONT PIN JACK 4P	AKX7014

Mark	No.	Description	Part No.
W	**STAND BY ASSY**		
	SEMICONDUCTOR		
	D7501		SLR-343VR(MNP)
	SWITCH		
	S7501		ASG7013
	OTHERS		
	7501	3P CABLE HOLDER	51048-0300
X	**FRONT DIGIN ASSY**		
	CAPACITOR		
	C7601		CKSQYF104Z50
	RESISTORS		
	All Resistors		RS1/10S□□□J
	OTHERS		
	JA7601	OPTICAL LINK IN	GP1FA551RZ
	CN7601	KR CONNECTOR	S5B-PH-K-S
	KN7601	EARTH METAL FITTING	VNF1084
Y	**DSP ASSY**		
	SEMICONDUCTORS		
	IC9101		AK4112AVF
	IC9102		AK4527VQ
	IC9551		AK7706VT
	IC9103		CS4391
	IC9501		CS493292
	IC9201,IC9202		NJM2100M
	IC9504		PDN030A
	IC9811		PQ20WZ51
	IC9812		PQ7VZ5
	IC9552		TC551001CFT-70L
	IC9151		TC74ACT151F
	IC9152		TC74HCU04AF
	IC9505		TC74LVX244FT
	IC9502,IC9503		TC74VHC574F
	IC9506		TC74VHCT244AFT
	IC9507		TC7WU04FU
	IC9601		TC9164AF
	IC9602-IC9604,IC9701-IC9707		UPC4570G2
	Q9201,Q9202,Q9601-Q9606		2SC3326
	Q9611,Q9612		2SC3326
	Q9102,Q9104,Q9203,Q9607		DTA124EK
	Q9609,Q9610		DTA124EK
	Q9101,Q9103,Q9204,Q9608		DTC124EK
	D9601,D9602		1SS181

Mark	No.	Description	Part No.
	COILS AND FILTERS		
	L9501,L9551,L9801,L9802,L9807	CHIP FERRITE BEAD	ATL7002
	L9809,L9811,L9812	CHIP FERRITE BEAD	ATL7002
	F9151-F9153	CHIP BEAD	DTF1064
	L9101-L9107,L9502,L9503	CHIP SOLID INDUCTOR	QTL1013
	L9506,L9507,L9552	CHIP SOLID INDUCTOR	QTL1013
	CAPACITORS		
	C9135		CCSQCH101J50
	C9809		CCSQCH221J50
	C9159,C9161		CCSQCH470J50
	C9154,C9156,C9518,C9564		CCSQCH471J50
	C9510,C9511		CCSRCH100D50
	C9609,C9610,C9721,C9722,C9735		CCSRCH101J50
	C9107		CCSRCH150J50
	C9106		CCSRCH180J50
	C9621,C9622,C9749-C9752		CCSRCH221J50
	C9509,C9629,C9757,C9758		CCSRCH271J50
	C9101,C9104,C9112,C9115,C9119		CCSRCH471J50
	C9122,C9503,C9505,C9507,C9513		CCSRCH471J50
	C9515,C9520,C9522,C9525,C9528		CCSRCH471J50
	C9553,C9555,C9557,C9559,C9561		CCSRCH471J50
	C9617,C9618,C9639		CCSRCH471J50
	C9201,C9202		CCSRCH560J50
	C9707,C9708		CCSRCH820J50
	C9611,C9612,C9736		CCSRCH821J50
	C9113		CEAT221M10
	C9523,C9526,C9643,C9644,C9770		CEJA100M25
	C9501,C9516,C9551,C9740		CEJA101M10
	C9801,C9802,C9812,C9814		CEJA101M10
	C9123,C9125		CEJA1R0M50
	C9127,C9529		CEJA2R2M50
	C9713,C9714,C9727,C9728,C9739		CEJA330M10
	C9753,C9754,C9765-C9769		CEJA330M10
	C9102,C9108,C9117,C9120		CEJA470M16
	C9151,C9152,C9162,C9562		CEJA470M16
	C9803,C9805		CEJA470M25
	C9203,C9204,C9206,C9207		CEJA4R7M50
	C9603,C9604,C9615,C9616		CEJA4R7M50
	C9627,C9628,C9761,C9762,C9811		CEJA4R7M50
	C9813		CEJA4R7M50
	C9110		CEJAR47M50
	C9815		CKSQYB102K50
	C9134,C9153,C9155,C9157,C9160		CKSQYB103K50
	C9517,C9563,C9816		CKSQYB103K50
	C9607,C9608,C9619,C9620		CKSQYF104Z25
	C9631,C9632,C9705,C9706		CKSQYF104Z25
	C9709-C9712,C9723-C9726		CKSQYF104Z25
	C9737,C9738,C9759,C9760,C9810		CKSQYF104Z25
	C9163-C9167		CKSQYF104Z50
	C9745,C9746,C9781,C9782		CKSRYB102K50
	C9103,C9105,C9118,C9121,C9124		CKSRYB103K50
	C9133,C9158,C9502,C9504,C9506		CKSRYB103K50
	C9508,C9512,C9514,C9519,C9521		CKSRYB103K50
	C9524,C9527,C9531,C9552,C9554		CKSRYB103K50
	C9556,C9558,C9560,C9572		CKSRYB103K50
	C9636,C9637		CKSRYB103K50
	C9109,C9114,C9116,C9126,C9626		CKSRYB104K16

http://www.manualscenter.com

VSX-35TX, VSX-33TX

Mark	No.	Description	Part No.
	C9605,C9606,C9633,C9755,C9756		CKSRYB122K50
	C9211,C9212		CKSRYB152K50
	C9703,C9704,C9715,C9716,C9729		CKSRYB182K50
	C9601,C9602,C9613,C9614,C9625		CKSRYB222K50
	C9763,C9764		CKSRYB222K50
	C9701,C9702		CKSRYB272K50
	C9732		CKSRYB333K16
	C9645		CKSRYB472K50
	C9111		CKSRYB682K50
	C9717,C9718,C9731		CKSRYB821K50
	C9205,C9208-C9210		CKSRYF104Z25
	C9730		CKSRYF104Z50

RESISTORS

	R9153,R9172,R9173,R9175,R9812		RS1/10S0R0J
	R9815		RS1/10S0R0J
	R9159,R9162,R9169-R9171		RS1/10S101J
	R9165-R9167		RS1/10S102J
	R9561,R9563-R9570,R9584		RS1/10S103J
	R9151,R9152,R9154-R9156		RS1/10S104J
	R9814,R9816		RS1/10S122J
	R9123		RS1/10S182J
	R9101		RS1/10S183J
	R9813		RS1/10S202J
	R9161,R9168		RS1/10S222J
	R9588,R9589		RS1/10S331J
	R9552,R9553,R9562		RS1/10S472J
	R9160,R9164		RS1/10S473J
	R9811		RS1/10S511J
	R9121		RS1/10S562J
	R9120,R9122		RS1/10S681J
	R9158,R9163		RS1/10S750J
	Other Resistors		RS1/16S□□□J

OTHERS

	X9101	CRYSTAL RESONATOR (24MHz)	ASS7025
	X9501	CHIP CRYSTAL (27MHz)	VSS1086
	CN9805,CN9806	20P FFC CONNECTOR	52044-2045
	JA9151	2P PIN JACK	AKB7131
	JA9153,JA9154	OPTICAL LINK IN	GP1FA551RZ
	JA9155,JA9156	OPTICAL LINK OUT	GP1FA551TZ
	CN9801	20P SOCKET	KP200TA20L
	CN9803	4P SOCKET	KP200TA4L
	CN9802	9P SOCKET	KP200TA9L
	CN9804	KR CONNECTOR	S5B-PH-K-S

6. ADJUSTMENT

■ IDLE CURRENT ADJUSTMENT

• **CAUTION** : Do not turn arround the adjustment Varriable resistors (VRs) fast !
If you go over the adjustment specification value too much. MOS-FET may be broken.

Steps

1. Decrease the level of the Adjustment Variable resistors (VR) for the channel to be adjusted. (Turn counterclockwise.)
2. Set the power switch to ON.
3. First adjustment : Adjust VRs in following the step in table 1 and table 2.
4. Second adjustment : Adjust VRs in following the step in table 1 and table 2 that depends on aging time.

Table 1

Step No.	Adjustment Channel	Adjustment Point	Measurement Point
①	SL ch	VR2601	Between W441 and W443
②	SR ch	VR2621	Between W432 and W433
③	FL ch	VR2501	Between two terminal of 2511
④	C ch	VR2541	Between two terminal of 2551
⑤	FR ch	VR2521	Between two terminal of 2531

Table 2

	Adjustment Time	Adjustment Value
First adjustment	00 : 00 - 01 : 30	16.6mV ± 10% (16.6mV ± 1.6mV)
Second adjustment	07 : 00 - 08 : 59	8.2mV ± 10% (8.2mV ± 0.8mV)
	09 : 00 - 11 : 59	7.5mV ± 0.5mV
	12 : 00 - 14 : 59	7.0mV ± 0.5mV
	15 : 00 -	7.0mV ± 0.5mV

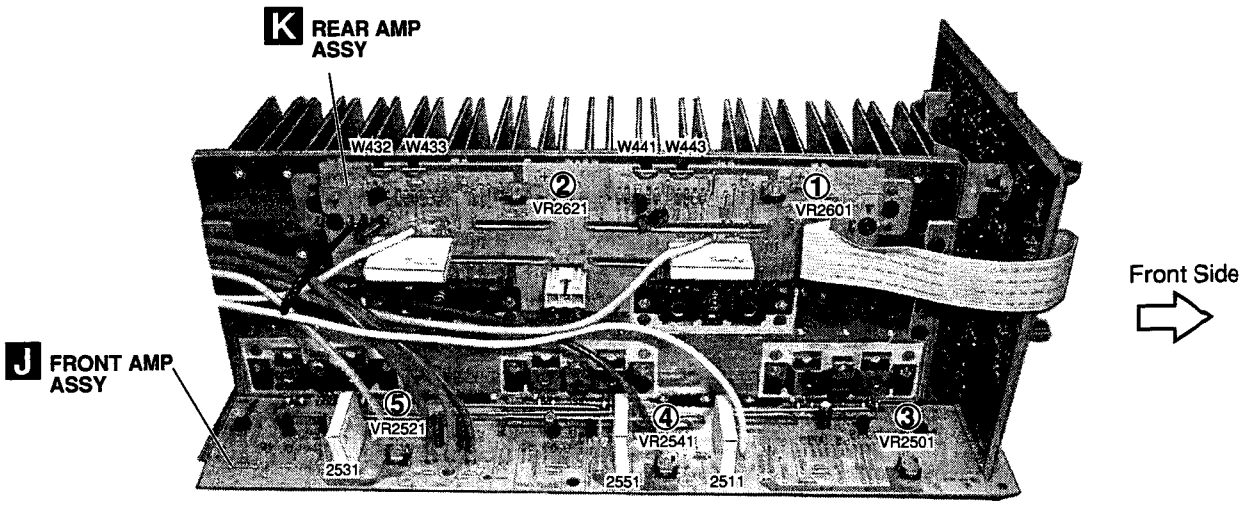

Fig.1 Adjustment Points

http://www.manualscenter.com

7. GENERAL INFORMATION

7.1 DISASSEMBLY

■Bonnet

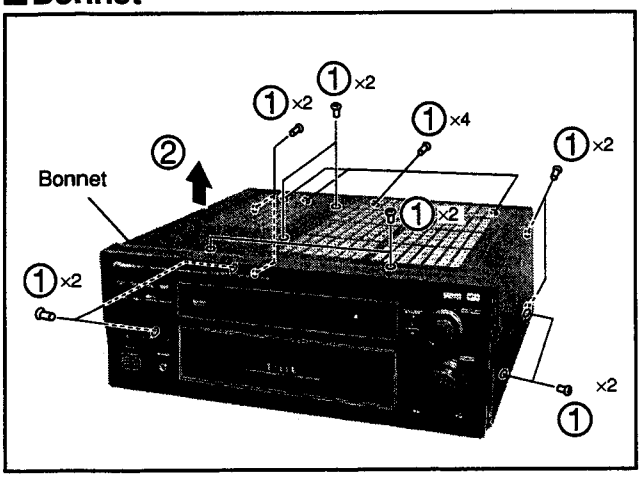

■Front Panel Section

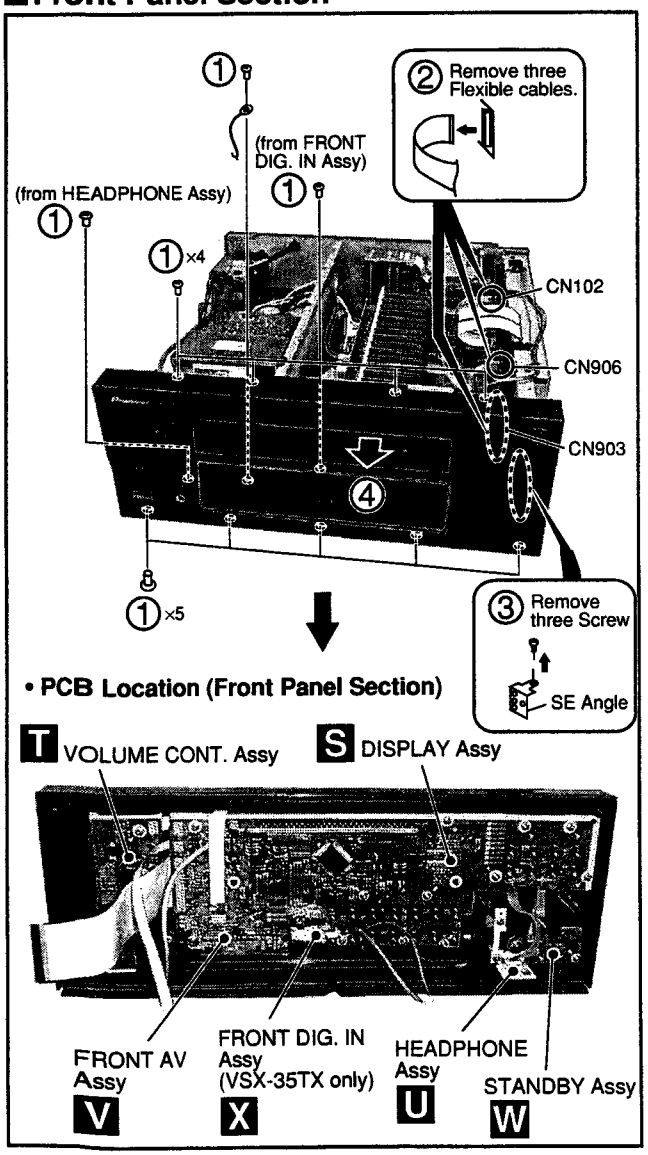

■Heat Sink Section

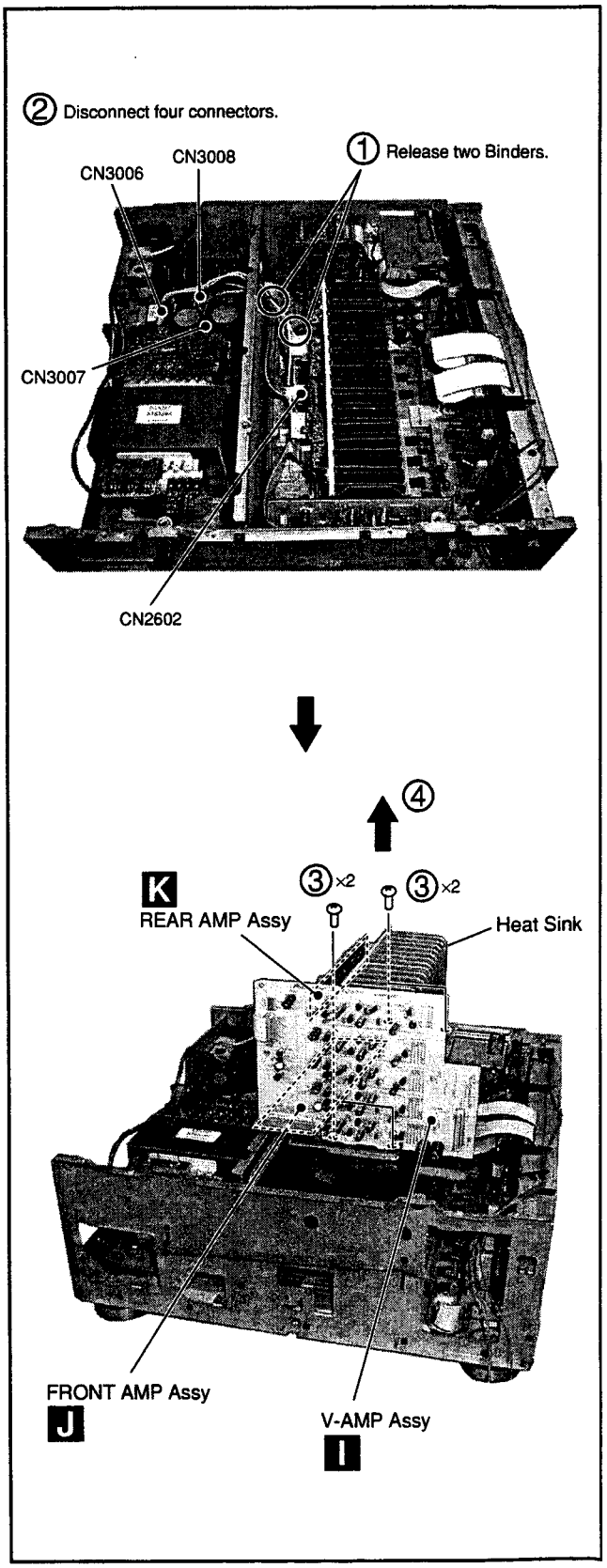

■ PCB Location

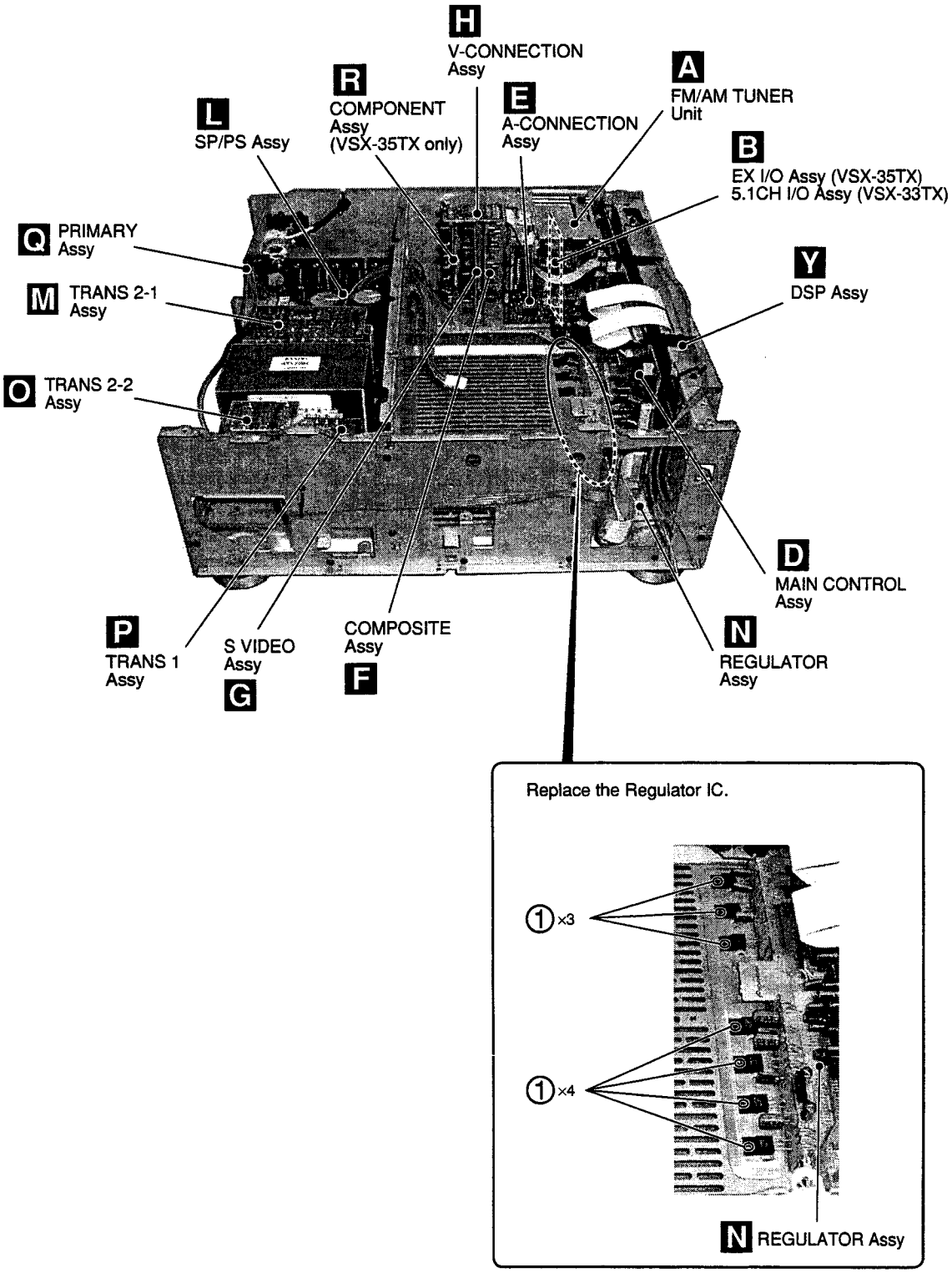

http://www.manualscenter.com

7.2 PARTS

7.2.1 IC

• The information shown in the list is basic information and may not correspond exactly to that shown in the schematic diagrams.

•List of IC

PD5588A, PD5587A

■ PD5588A (DISPLAY ASSY : IC7001)

• Display Control IC

• Pin Assignment (Top View)

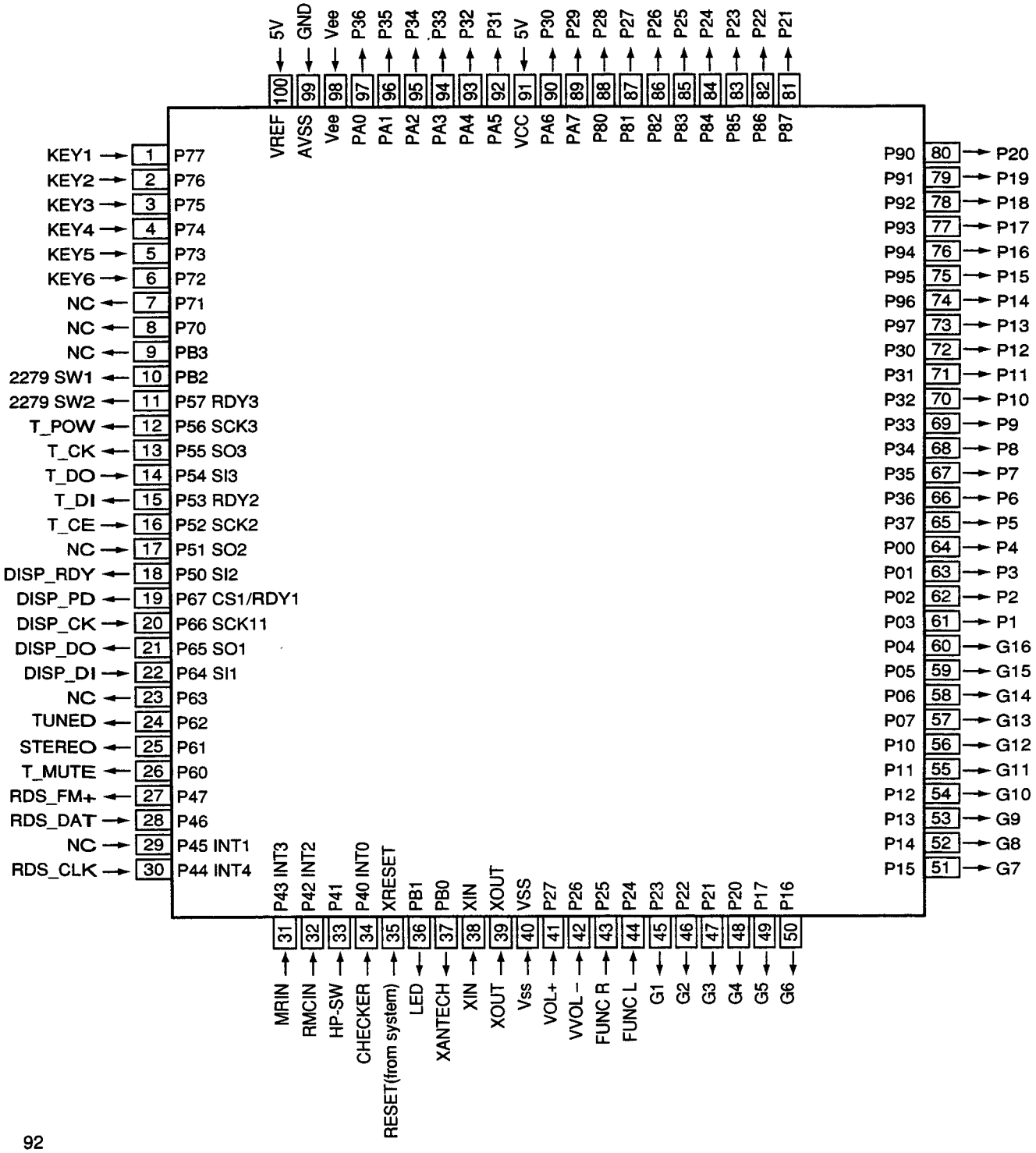

• Pin Function

No.	Pin Name	I/O	Function	No.	Pin Name	I/O	Function
1	KEY 1	I	Key scan input 1	51	G7	O	Grid output 7
2	KEY 2	I	Key scan input 2	52	G8	O	Grid output 8
3	KEY 3	I	Key scan input 3	53	G9	O	Grid output 9
4	KEY 4	I	Key scan input 4	54	G10	O	Grid output 10
5	KEY 5	I	Key scan input 5	55	G11	O	Grid output 11
6	KEY 6	I	Key scan input 6	56	G12	O	Grid output 12
7	NC	O	Open	57	G13	O	Grid output 13
8	NC	O	Open	58	G14	O	Grid output 14
9	NC	O	Open	59	G15	O	Grid output 15
10	2279 SW1	O	Control for NJM2279	60	G16	O	Grid output 16
11	2279 SW2	O	Control for NJM2279	61	S1	O	Segment output 1
12	T-POW	O	Tuner power down	62	S2	O	Segment output 2
13	T-CK	O	Clock for tuner module	63	S3	O	Segment output 3
14	T-DO	I	Data from tuner module	64	S4	O	Segment output 4
15	T-DI	O	Data for tuner module	65	S5	O	Segment output 5
16	T-CE	O	Chip enable for tuner module	66	S6	O	Segment output 6
17	NC	I	Open	67	S7	O	Segment output 7
18	DISP RDY	O	Data request for IC901 MAIN U-COM	68	S8	O	Segment output 8
19	DISP PD	O	Display u-com power dowen	69	S9	O	Segment output 9
20	DISP CK	I	Clock from IC901 MAIN U-COM	70	S10	O	Segment output 10
21	DISP DO	O	Data for IC901 MAIN U-COM	71	S11	O	Segment output 11
22	DISP DI	I	Data from IC901 MAIN U-COM	72	S12	O	Segment output 12
23	NC	O	Open	73	S13	O	Segment output 13
24	TUNED	I	Tuned data from tuner module	74	S14	O	Segment output 14
25	STEREO	I	Stereo tuned data from tuner module	75	S15	O	Segment output 15
26	T-MUTE	O	Tuner mute ON/OFF	76	S16	O	Segment output 16
27	RDS FM+	–	VDD for IC7401 BU1923 (RDS model only)	77	S17	O	Segment output 17
28	RDS DAT	O	Data for IC7401 BU1923 (RDS model only)	78	S18	O	Segment output 18
29	NC	I	(pull-up)	79	S19	O	Segment output 19
30	RDS CLK	I	Clock for IC7401 BU1923 (RDS model only)	80	S20	O	Segment output 20
31	MR IN	I	Sub room remote control (MR&S, MR model only)	81	S21	O	Segment output 21
32	RMC IN	I	Remote control	82	S22	O	Segment output 22
33	HP-SW	I	Headphone connect detect	83	S23	O	Segment output 23
34	CHECKER	I	For unit check test mode detection	84	S24	O	Segment output 24
35	COM-RESET	I	Reset	85	S25	O	Segment output 25
36	LED	O	Standby LED	86	S26	O	Segment output 26
37	XANTECH	O	XANTECH ON/OFF	87	S27	O	Segment output 27
38	XIN	–	Connect a 7.2MHz oscillator	88	S28	O	Segment output 28
39	XOUT	–		89	S29	O	Segment output 29
40	VSS	–	GND	90	S30	O	Segment output 30
41	VOL+	I	Rotary encoder signal +	91	VDD	–	Power supply +5V
42	VOL-	I	Rotary encoder signal -	92	S31	O	Segment output 31
43	FUNC/R	I	Rotary encoder signal R	93	S32	O	Segment output 32
44	FUNC/L	I	Rotary encoder signal L	94	S33	O	Segment output 33
45	G1	O	Grid output 1	95	S34	O	Segment output 34
46	G2	O	Grid output 2	96	S35	O	Segment output 35
47	G3	O	Grid output 3	97	S36	O	Segment output 36
48	G4	O	Grid output 4	98	VEE	–	Power supply 5V
49	G5	O	Grid output 5	99	AVSS	–	GND
50	G6	O	Grid output 6	100	VREF	–	Reference voltage 5V

http://www.manualscenter.com

■ PD5587A (MAIN CONTROL ASSY : IC901)

- **Main Control IC**

- **Pin Assignment (Top View)**

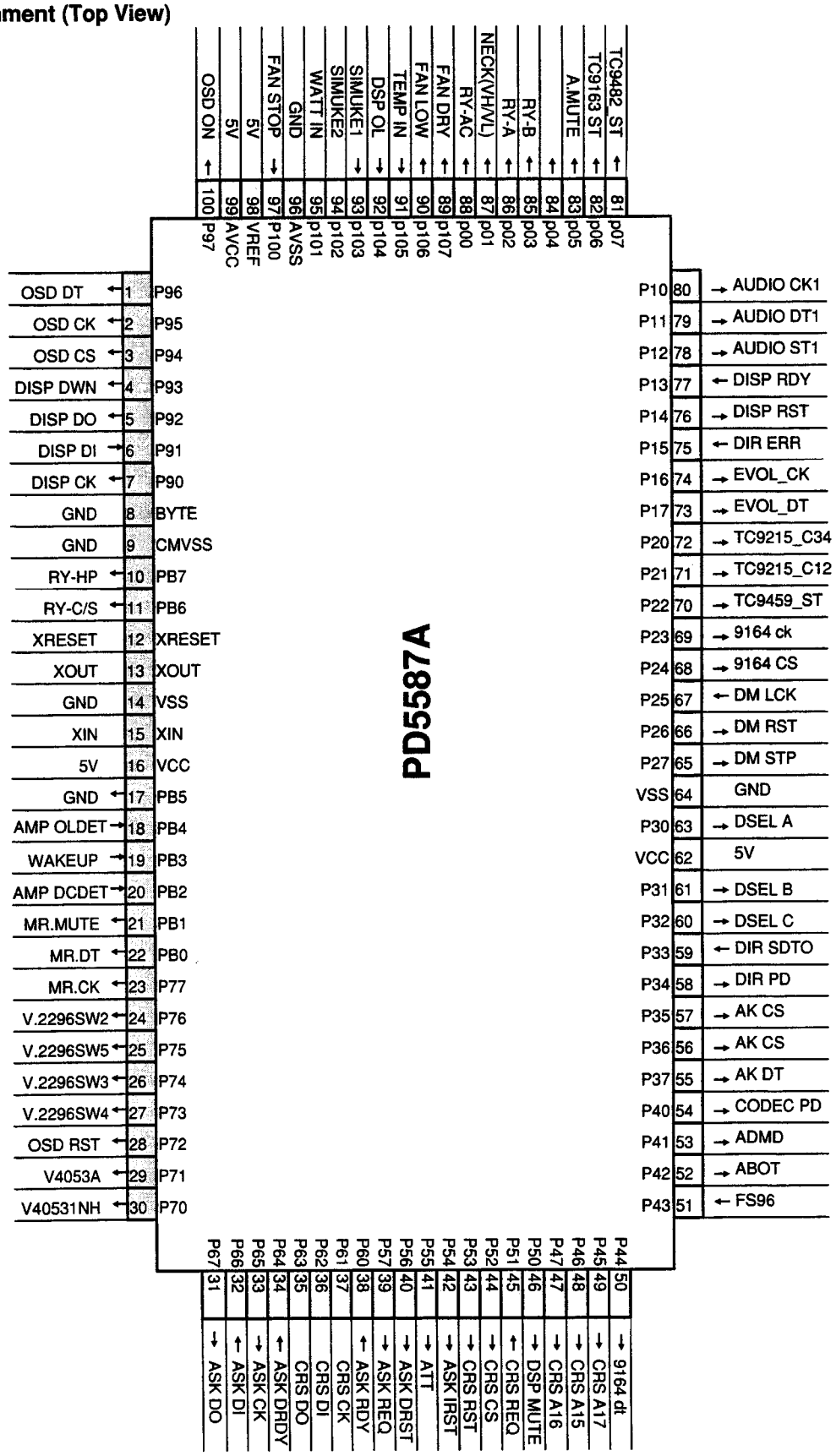

• Pin Function

No.	Pin Name	I/O	Function	No.	Pin Name	I/O	Function
1	OSD DT	O	Data for IC752 LC74782M-9011	41	ATT	O	Audio attenuator
2	OSD CK	O	Clock for IC752 LC74782M-9011	42	ASK IRST	O	for AK7706 Hard reset
3	OSD CS	O	Chip select for IC752 LC74782M-9011	43	CRS RST	O	Reset for CS49329
4	DISP DWN	O	Reset for IC9501 DSP U-COM	44	CRS CS	O	Chip select for CS49329
5	DISP DO	I	Data from IC7001 DISP U-COM	45	CRS REQ	I	Data for CS49329
6	DISP DI	O	Data for IC7001 DISP U-COM	46	DSP MUTE	O	Mute request from DSP U-COM
7	DISP CK	O	Clock for IC7001 DISP U-COM	47	CRS A16	O	Control for PDN030A
8	GND	–	GND	48	CRS A15	O	Control for PDN030A
9	GND	–	GND	49	CRS A17	O	Control for PDN030A
10	RY-HP	O	Headphone relay ON/OFF	50	9164DT	O	Data from TC9164
11	RY-C/S	O	SP C/S relay ON/OFF	51	FS96	I	96k Hz detect
12	XRESET	I	Reset	52	ABOT	O	Boot signal
13	XOUT	O	Connect a 4.19MHz oscillator	53	ADMD	O	Audio preout mute ON/OFF
14	GND	–		54	CODEC PD	O	CODEC Power down
15	XIN	I		55	AK DT	O	Data from CODEC
16	VDD	–	Power supply +5V	56	AK CK	O	Control for CODEC
17	GND	–	GND	57	AK CS	O	Chip select for CODEC
18	AMP OLDET	O	Amp Overload detect	58	DIR PD	O	DIR Power down
19	WAKEUP	I	AC pulse input	59	DIR SDTO	O	DIR data for output
20	AMP DCDET	O	Amp D.C. detect	60	DSEL C	O	Control for TC74ACT151F
21	MR MUTE	O	Audio mute ON/OFF for sub room (MR&S, MR model only)	61	DSEL B	O	Control for TC74ACT151F
22	MR-V DT	O	Data for IC110 M62429FP control (MR&S model only)	62	Vdd	–	Power supply +5V
23	MR-V CK	O	Clock for IC110 M62429FP control (MR&S model only)	63	DSEL A	O	Control for TC74ACT151F
24	V.2296SW2	O	Control for IC701, 801, 802 NJM2296M	64	GND	–	GND
25	V.2296SW5	O	Control for IC701, 801, 802 NJM2296M	65	DM STP	O	Data for Demodureter
26	V.2296SW3	O	Control for IC701, 801, 802 NJM2296M	66	DM RST	O	Reset for Demodureter
27	V.2296SW4	O	Control for IC701, 801, 802 NJM2296M	67	DM LCK	O	Clock for Demodureter
28	OSD RST	O	Reset for IC752 LC74782M-9011	68	9164 CS	O	Chip select for TC9164
29	V4053A	O	Control for TC74HC4053 (Nch Open Drain)	69	9164 CK	O	Clock for TC9164
30	V4053INH	O	Inhibit for TC74HC4053 (Nch Open Drain)	70	TC4959_ST	O	Strobe for TC4959
31	ASK DO	I	Data from AK7706	71	TC9215_C-12	O	Control for TC9215
32	ASK DI	O	Data for AK7706 Input signal	72	TC9215_C-34	O	Control for TC9215
33	ASK CK	O	Clock for AK7706	73	EVOL_DT	O	Data for Electr Volume
34	ASK DRDY	O	Data ready from AK7706	74	EVOL_CK	O	Clock for Electr Volume
35	CRS DO	I	Data from CS49329	75	DIR ERR	I	DIR Error detect
36	CRS DI	O	Data for CS49329 Input signal	76	DISP RST	O	Reset for IC7001 DISP U-COM
37	CRS CK	O	Clock for CS49329	77	DISP RDY	I	Data request from IC7001 DISP U-COM
38	ASK RDY	I	Data request from AK7706	78	AUDIO ST1	O	Strobe for TC9274F,TC9164,TC9163
39	ASK REQ	O	Chip select for AK7706	79	AUDIO DT1	O	Data for TC9274F,TC9164,TC9163
40	ASK DRST	O	for AK7706 Soft reset	80	AUDIO CK1	O	Clock for TC9274F,TC9164,TC9163

http://www.manualscenter.com

• Pin Function

No.	Pin Name	I/O	Function	No.	Pin Name	I/O	Function
81	TC9482ST	O	Strobe for IC108 TC9482N control	91	TEMP IN	O	O/open (KU,J,SD), I/Fan temperature A/D input (other)
82	TC9163ST	O	Strobe for IC107 TC9163F control	92	DSP OL	I	DSP overload detect, A/D input
83	A MUTE	O	Audio mute ON/OFF	93	SIMUKE 1	I	SIMUKE (pull-up or down)
84	NC	O	Open	94	SIMUKE 2	I	SIMUKE (pull-up or down)
85	RY-B	O	SP B relay ON/OFF	95	WATT IN	I/O	O/Open (KU,J,SD), I/Fan wattage input, A/D input (other)
86	RY-A	O	SP A relay ON/OFF	96	GND	–	GND
87	NECK(VH/-VL)	O	Neck ON/OFF (24,26,908,938 only)	97	FAN STOP	I/O	O/Open (KU,J,SD), I/Fan stop detecter (other)
88	RY-AC	O	AC relay ON/OFF	98	5V	–	Power supply +5V
89	FAN DRIVE	O	Open (KU,J,SD), Fan drive (other)	99	5V	–	Power supply +5V
90	FAN LOW	O	Open (KU,J,SD), Fan low (other)	100	OSD ON	O	Control for IC102 BU4053BCF, TC4W53FU (MR&S model only)

7.2.2 DISPLAY

■ AAV7076 (DISPLAY ASSY :V7001)

- **FL Indicator Tube**

- **Pin Assignment**

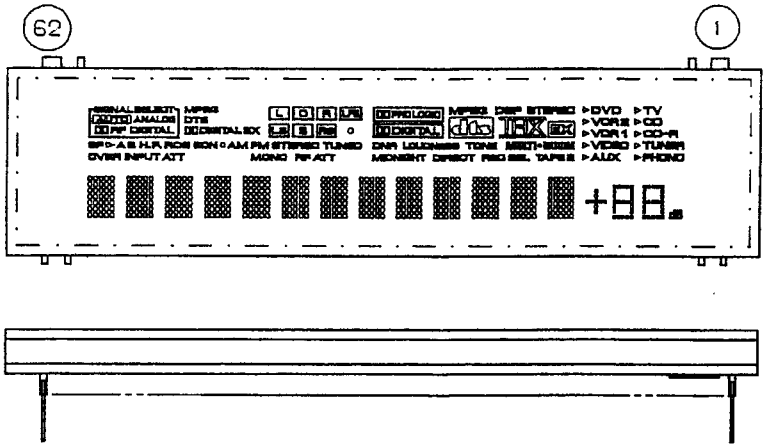

- **Grid Assignment**

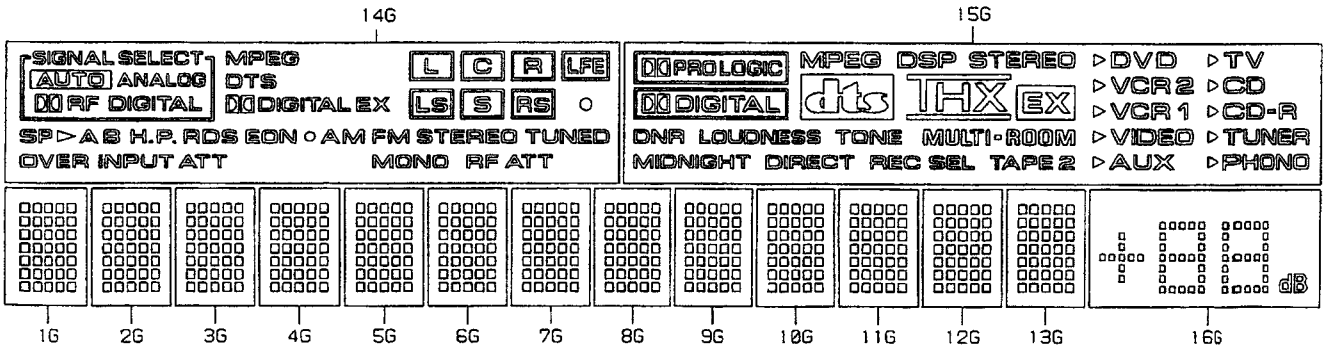

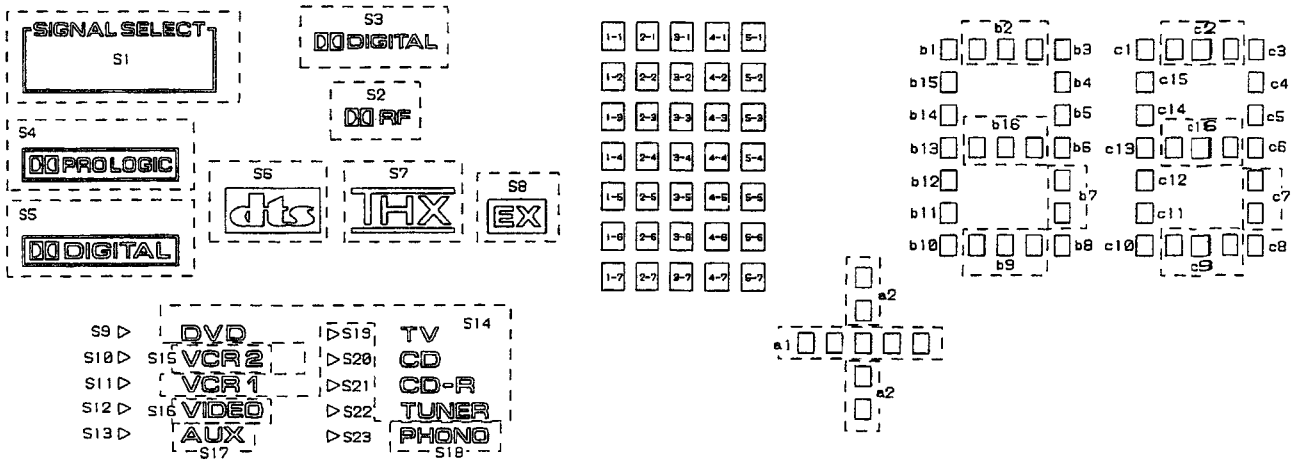

http://www.manualscenter.com

• Anode Connection

	1G-13G	14G	15G	16G
P1	1-1	AM	MIDNIGHT	a1
P2	2-1	FM	DIRECT	a2
P3	3-1	L	REC	b1
P4	4-1	C	SEL	b2
P5	5-1	R	TAPE 2	b3
P6	1-2	LR	DNR	b15
P7	2-2	LS	LOUDNESS	b4
P8	3-2	S	TONE	b14
P9	4-2	RS	MULTI•ROOM	b5
P10	5-2	MONO	S5	b13
P11	1-3	STEREO	S6	b16
P12	2-3	RF ATT	S7	b6
P13	3-3	TUNED	S8	b12
P14	4-3	○	S4	b7
P15	5-3	OVER	MPEG	b11
P16	1-4	INPUT	DSP	b10
P17	2-4	ATT	STEREO	b9
P18	3-4	(EON)○	S13	b8
P19	4-4	EON	S12	c1
P20	5-4	RDS	S11	c2
P21	1-5	SP▷	S10	c3
P22	2-5	A	S9	c15
P23	3-5	B	S17	c4
P24	4-5	H.P.	S16	c14
P25	5-5	EX	S15	c5
P26	1-6	S3	S14	c13
P27	2-6	DTS	S23	c16
P28	3-6	MPEG	S22	c6
P29	4-6	S1	S21	c12
P30	5-6	S2	S20	c7
P31	1-7	DIGITAL	S19	c11
P32	2-7	AUTO	S18	c10
P33	3-7	ANALOG	-	c9
P34	4-7	-	-	c8
P35	5-7	-	-	dB

PIN CONNECTION

PIN NO.	50	49	48	47	46	45	44	43	42	41	40	39	38	37	36	35	34	33	32	31	30	29	28	27	26	25	24	23	22	21	20	19	18	17	16	15	14	13	12	11	10	9	8	7	6	5	4	3	2	1
CONNECTION	9G	10G	11G	12G	13G	14G	15G	16G	NC	P1	P2	P3	P4	P5	P6	P7	P8	P9	P10	P11	P12	P13	P14	P15	P16	P17	P18	P19	P20	P21	P22	P23	P24	P25	P26	P27	P28	P29	P30	P31	P32	P33	P34	P35	NC	NC	NP	NP	F1	F1

PIN NO.	62	61	60	59	58	57	56	55	54	53	52	51
CONNECTION	F2	F2	NP	NP	1G	2G	3G	4G	5G	6G	7G	8G

NOTE : F1, F2 : Filament G1 to G15 : Grid NC : No Connection NP: No Pin DL : Datum Line

http://www.manualscenter.com

7.3 REMOTE CONTROL UNIT

7.3.1 AXD7266 (Remote Control 35)

7.3.1.1 EXPLODED VIEWS AND PARTS LIST

NOTES:
- *Parts marked by "NSP" are generally unavailable because they are not in our Master Spare Parts List.*
- *The ⚠ mark found on some component parts indicates the importance of the safety factor of the part. Therefore, when replacing, be sure to use parts of identical designation.*
- *Screws adjacent to ▼ mark on the product are used for disassembly.*

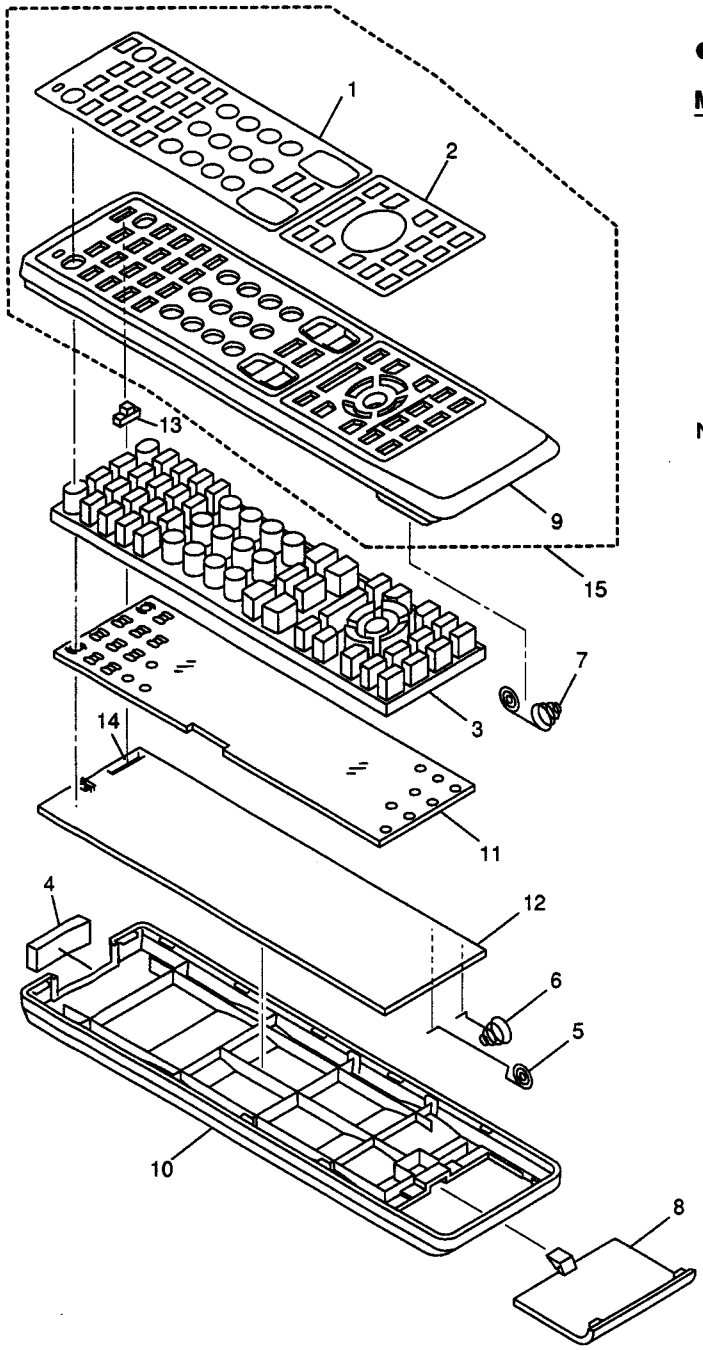

● PARTS LIST

Mark	No.	Description	Part No.
	1	Name Plate A	AZA7380
	2	Name Plate B (AXD7266)	AZA7396
	3	Rubber Sheet (AXD7266)	AZA7397
	4	Filter	AZA7340
	5	Terminal A (+)	AZB7141
	6	Terminal B (-)	AZB7142
	7	Spring	AZB7143
	8	Battery Cover	AZN7841
	9	Case (A)	AZN7832
	10	Case (B)	AZN7781
NSP	11	Illumi Plate	AZN7782
	12	PCB	AZW7260
	13	Knob	AZA7398
	14	Slide Switch	AZS7036
	15	Case A assy : 7266	AZN7864

7.3.2.2 PCB DIAGRAM

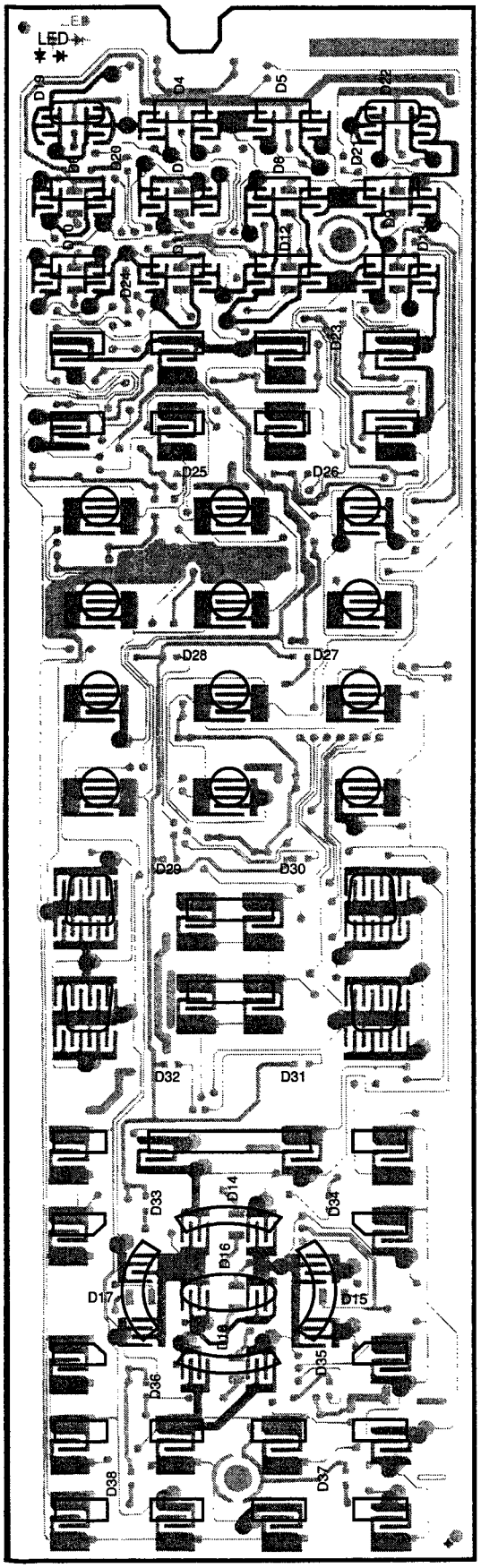

SIDE A

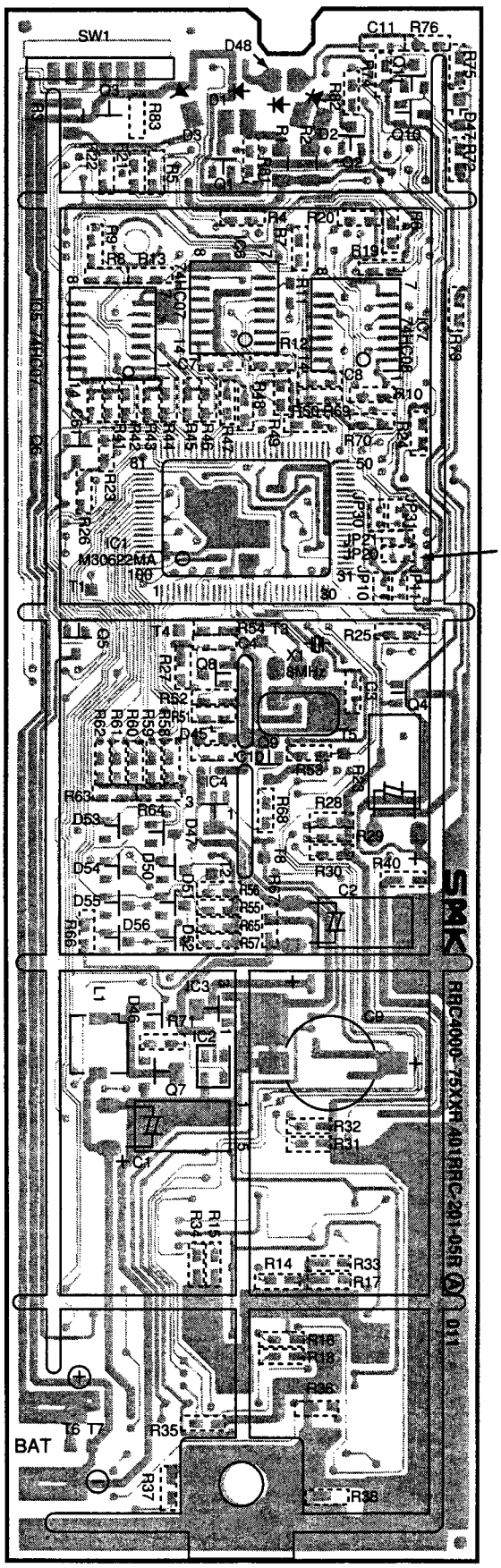

SIDE B

http://www.manualscenter.com

7.3.2.3 SCHEMATIC DIAGRAM

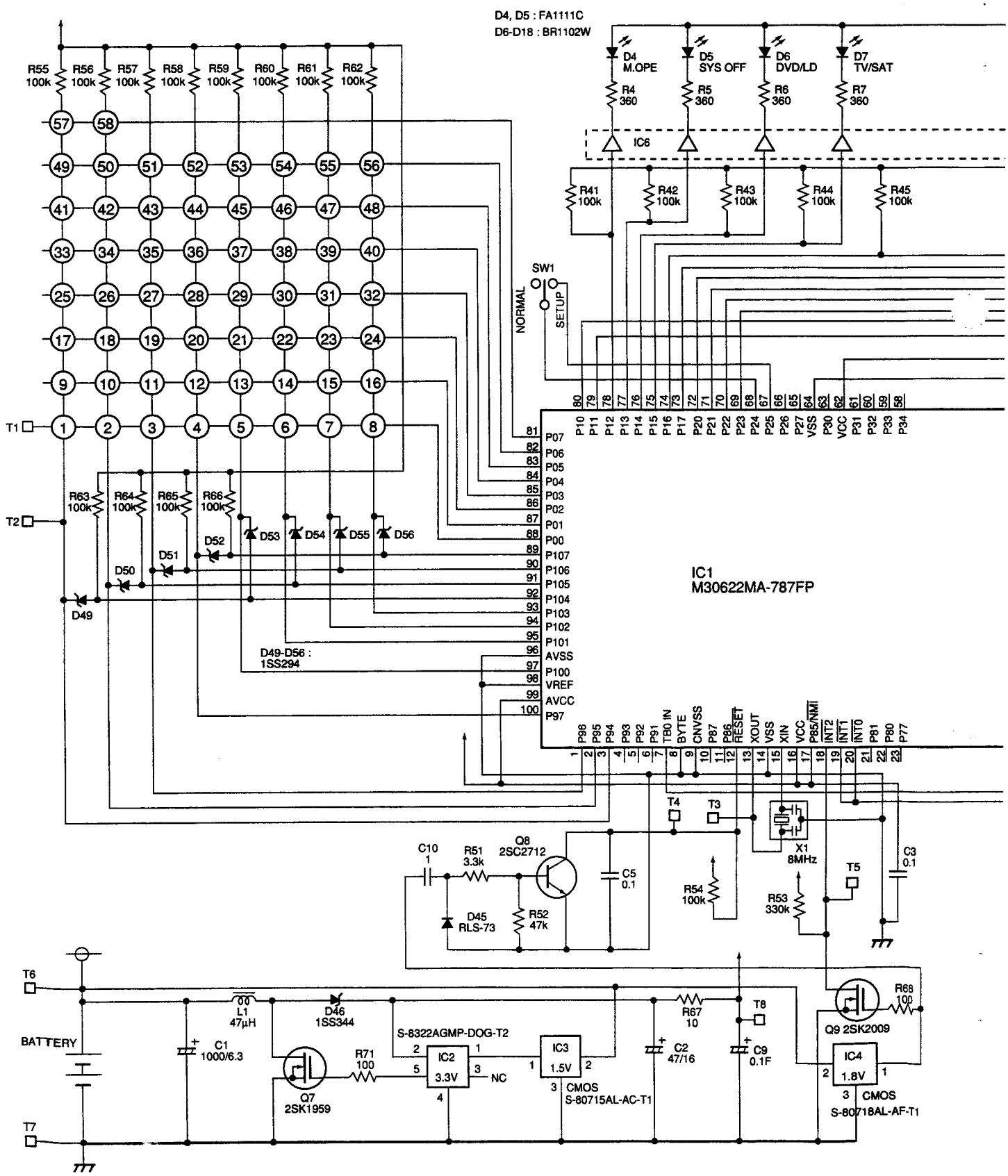

http://www.manualscenter.com

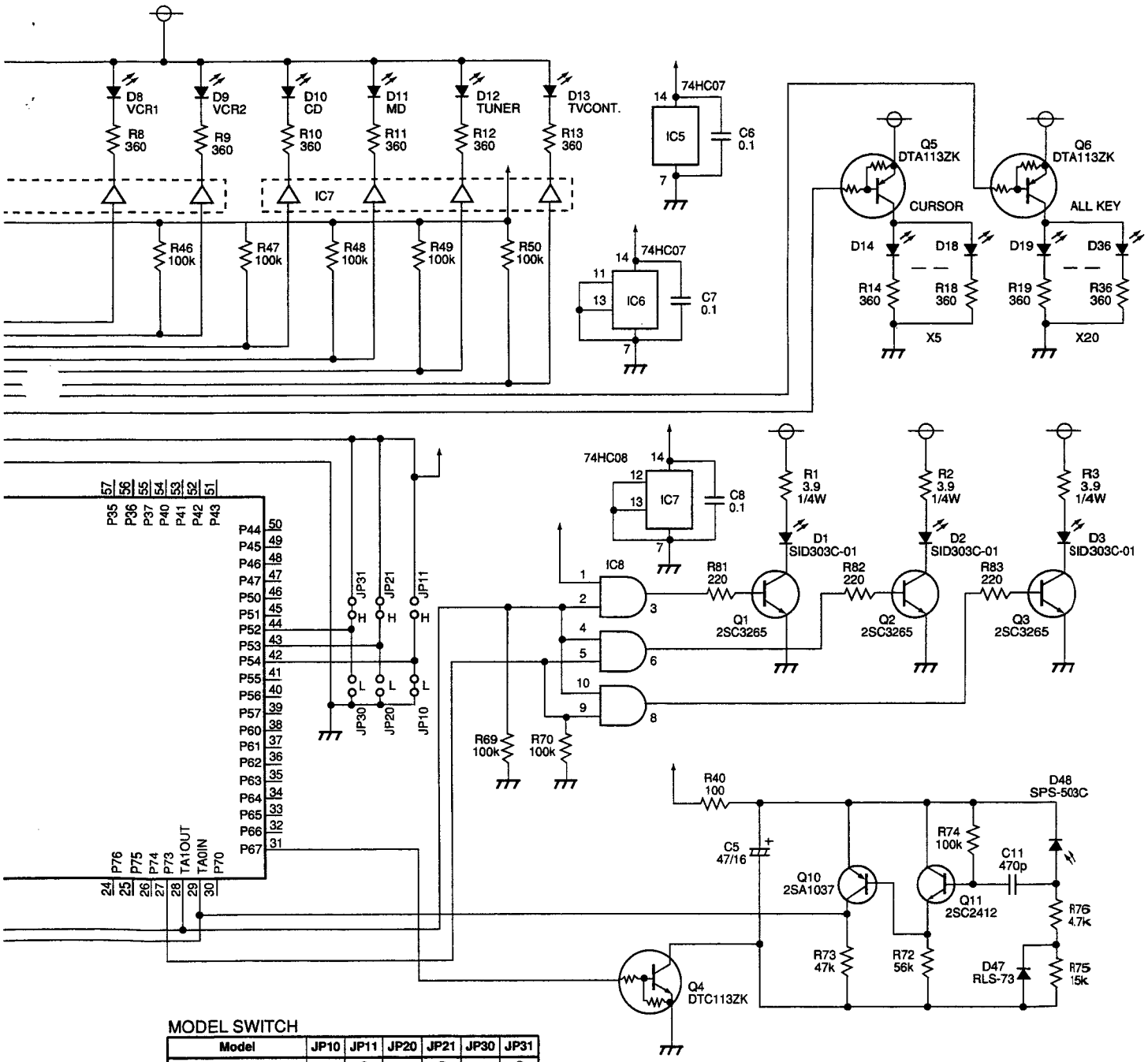

MODEL SWITCH

Model	JP10	JP11	JP20	JP21	JP30	JP31
AXD7257, AXD7278	–	O	–	O	–	O
AXD7258, AXD7279	–	O	–	O	O	–
AXD7259	–	O	O	–	–	O
AXD7266	–	O	O	–	O	–
AXD7273	O	–	–	O	–	O
AXD7275	O	–	–	O	O	–

7.3.2.4 PCB PARTS LIST

NOTES: ●*The ⚠ mark found on some component parts indicates the importance of the safety factor of the part. Therefore, when replacing, be sure to use parts of identical designation.*

●*When ordering resistors, first convert resistance values into code form as shown in the following examples.*

Ex.1 When there are 2 effective digits (any digit apart from 0), such as 560 ohm and 47k ohm (tolerance is shown by J=5%, and K=10%).

560 Ω → 56 × 10¹ → 561 ..... RD1/4PU [5][6][1] J
47k Ω → 47 × 10³ → 473 ..... RD1/4PU [4][7][3] J
0.5 Ω → R50 ..... RN2H [R][5][0] K
1 Ω → 1R0 ..... RS1P [1][R][0] K

Ex.2 When there are 3 effective digits (such as in high precision metal film resistors).

5.62k Ω → 562 × 10¹ → 5621 ..... RN1/4PC [5][6][2][1] F

Mark	No.	Description	Part No.
	IC1		M30622MA-787FP
	IC2		S-8322AGMP-DOG-T2
	IC3		S-80715AL-AC-T1
	IC4		S-80718AL-AF-T1
	IC5,IC6		74HC07
	IC7		74HC08
	Q1-Q3		2SC3265
	Q4		DTC113ZK
	Q5,Q6		DTA113ZK
	Q7		2SK1959
	Q8		2SC2712
	Q9		2SK2009
	Q10		2SA1037
	Q11		2SC2412
	D1-D3		SID303C-01
	D6-D18		BR1102W
	D23-D36		CL190TD-CD
	D45,D47		RLS-73
	D46		1SS344
	D48		SPS-503C
	D49-D56		1SS294

8. PANEL FACILITIES AND SPECIFICATIONS

8.1 PANEL FACILITIES

■ Front Section (VSX-35TX,VSX-33TX)

All the controls on the front panel are explained and/or referenced here. To open the front panel push gently on the lower third of the panel.

VSX-35TX

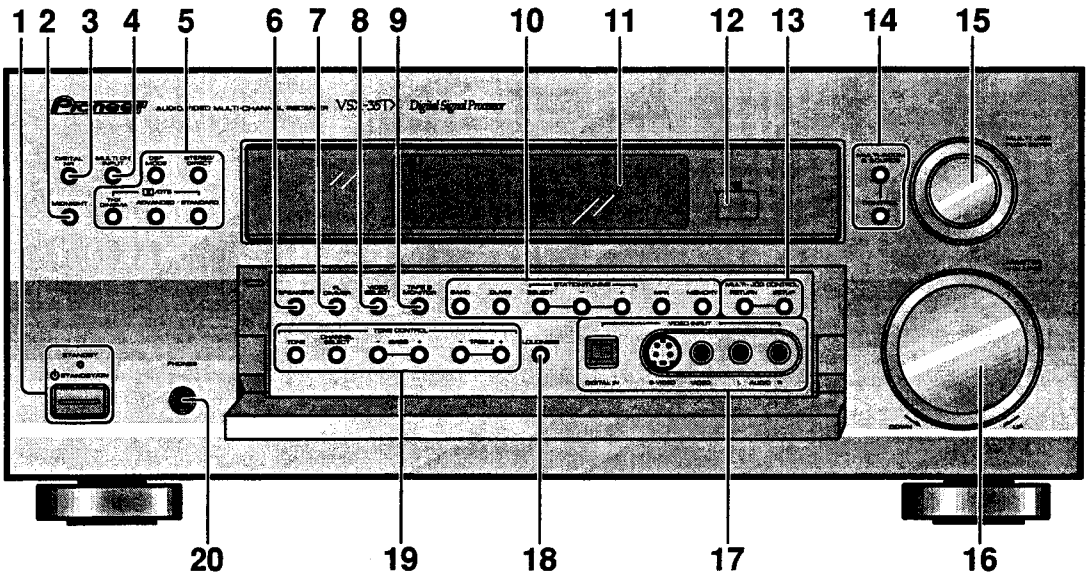

VSX-33TX

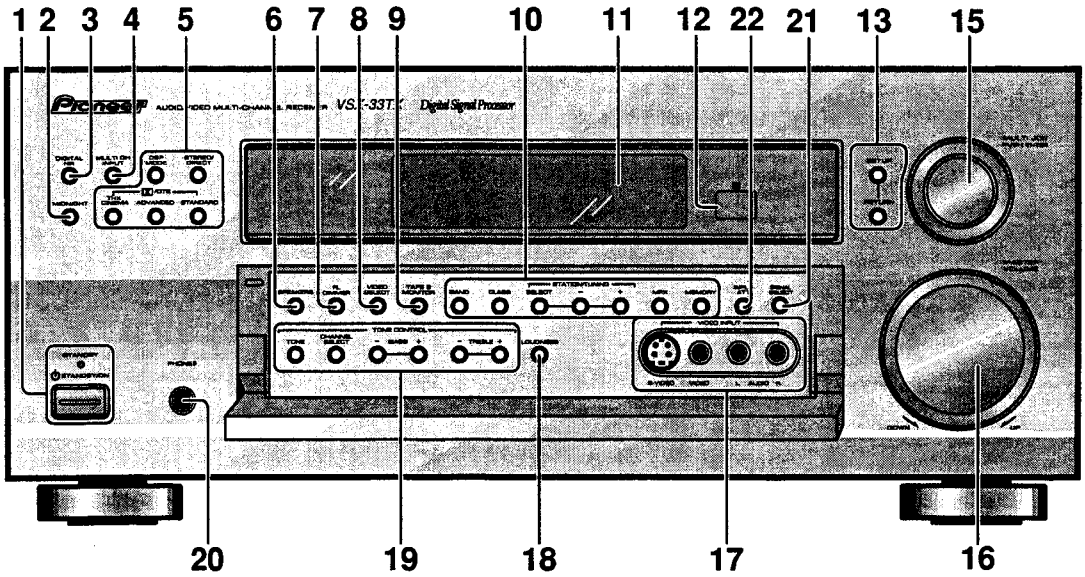

VSX-35TX, VSX-33TX

■ Front Section (for VSX-35TX and VSX-33TX)

1 ⏻ STANDBY/ON button
Press to switch the receiver ON or into STANDBY mode.

STANDBY indicator
Lights when the receiver is in STANDBY mode. (Please note that this receiver consumes a small amount of power [1.0 W] in the standby mode.)

2 MIDNIGHT button
Switches the MIDNIGHT mode on or off (cannot be used in THX mode).

3 DIGITAL NR button
Switches the DIGITAL Noise Reduction on or off (cannot be used in THX mode).

4 MULTI CH INPUT
Use to hook up an external component that can decode other types of signals and input them into the VSX-35TX.

5 DSP MODE button
Press repeatedly to select a DSP sound mode. (HALL 1, HALL 2, JAZZ, DANCE, THEATER 1, or THEATER 2, 5/7 CH STEREO). Use these modes to produce surround sound from standard (two channel) stereo sources and create different listening environments.

STEREO/DIRECT button
Switches the receiver into STEREO mode if it was in a different sound mode (like ADVANCED THEATER) or toggles between DIRECT and STEREO mode. For more on STEREO mode.

DIRECT playback bypasses the tone controls and channel level for the most accurate reproduction of a program source.

DD / DTS buttons
THX CINEMA – Cycles through the THX CINEMA, THX SURROUND EX or THX AUTO sound modes. Use when listening THX-certified sources if you have THX-certified speaker setup or want to re-create a THX-style sound environment. It is also appropriate for Dolby Digital, Dolby Pro Logic or DTS sources.Those with surround back speakers can use all three THX modes, those without should use the THX CINEMA mode.

ADVANCED THEATER – Use to select one of the four Advanced Theater modes. Use to create certain types of sound environments when listening to Dolby Digital, Dolby Pro Logic or DTS sources.

STANDARD – Use for pure decoding of multi channel sources, especially Dolby Digital, Dolby Pro Logic or DTS software.

6 SPEAKERS (A/B) button
Use to select the speaker system. A is the primary setting. It plays all speakers hooked up to the A system. A & B setting only plays the front speakers of both the A & B systems and the sub-woofer. Multi channel sources will be down-mixed to these speakers so no sound will be lost. B setting only plays the front speakers connected to the B system and multi channel sources will be down-mixed to these two speakers. The button cycles through the speaker systems as follows: A⇨B⇨A&B⇨off

7 FL DIMMER button
Use to adjust the brightness of the fluorescent display (FL = fluorescent display).
Four levels of the brightness ranging from very dim to very bright can be selected. Each press changes the brightness of the display.

8 VIDEO SELECT button
Switches the receiver between the various types of video input while keeping the audio input the same.

9 TAPE 2 MONITOR button
Selects the tape deck (MD recorder, etc.) connected to the TAPE 2 MONITOR inputs/outputs. Allows monitoring of a recording as it's being made.

10 TUNER CONTROL buttons
BAND – Press to select the AM or FM band.

CLASS – Press repeatedly to switch the preset station classes.

TUNING SELECT – Switches the STATION/TUNING button between station memory and frequency select modes.

STATION –/+ – Selects station memories when using the tuner.

TUNING –/+ – Selects the frequency when using the tuner.

MPX – Press to switch between auto stereo and MONO reception of FM broadcasts. When the broadcast signal is weak, selecting MONO will improve the sound quality.

MEMORY – Press to start the memorization of a preset station.

11 Display

12 Remote sensor
Point the remote control toward the remote sensor to operate the receiver.

13 MULTI-JOG CONTROL buttons
SETUP – Press to switch the setup mode.

RETURN – Press to move back one step in the SETUP process.

14 MULTI-ROOM & SOURCE button (VSX-33TX Only)
Press to use the multi room feature (it's best to have an optional PIONEER Multi-Room Remote Sensor Unit MR-100 or another IR receiver for this feature).

CONTROL button Used together with the INPUT SELECTOR to select the function to select the volume of the MULTI ROOM system.

15 MULTI JOG dial
You can use this dial for three purposes. In normal mode turn it to select a source component or press it to switch the display between function mode and sound mode. When you press the SETUP button (13), you can use it to perform SETUP operations (turn to select, push to enter).

The source indicators show the current component:

DVD/LD – DVD player or LaserDisc player.

TV/SAT– TV or satellite tuner.

CD – Compact Disc player.

CD-R/TAPE1/MD – CD recorder, tape deck or Mini Disc recorder connected to CD-R/TAPE 1/MD inputs/outputs.

TUNER – The built-in tuner.

PHONO – Turntable.

VIDEO – Video camera (etc.) connected to the VIDEO INPUT on the front panel.

VCR1/DVR – Video cassette recorder connected to VCR1/DVR inputs.

VCR 2 – Video cassette recorder or other component connected to VCR 2 inputs.

16 MASTER VOLUME
Adjusts the overall receiver volume.

17 VIDEO INPUT jacks
DIGITAL IN: (VSX-35TX Only)
Optical video input for connecting a video camera (or video game, portable DVD, etc.), that has an optical out.

S-VIDEO : Video input for connecting a video camera (etc.), that has an S-Video out.

VIDEO / AUDIO (L/R) : Video input for connecting a video camera, etc. that has standard video/audio outputs.

18 LOUDNESS button
Switches the LOUDNESS mode on or off (cannot be used in THX mode).

19 TONE button
This button has two functions. Firstly, it switches between TONE on and TONE BYPASS, which bypasses the tone circuitry. Secondly, you need to press the button before using the CHANNEL SELECT buttons to adjust the BASS & TREBLE (cannot be used in THX mode).

CHANNEL SELECT button
Switches the tone adjust controls between the FRONT, CENTER, SURROUND and SURROUND BACK speakers. You can then use the BASS and TREBLE controls to adjust the sound.

BASS (–/+) button
Use to adjust low frequencies.

TREBLE (–/+) button
Use to adjust the high frequencies.

20 PHONES jack
Connect headphones for private listening (no sound will be heard through the speakers).

21 SIGNAL SELECT button (VSX-33TX Only)
Press SIGNAL SELECT repeatedly to select one of the following:

ANALOG – Analog signal.

DIGITAL – Digital signal (DVD/LD, TV/SAT, CD, CD-R/TAPE 1/MD, VCR 1/DVR, VCR 2).

AUTO –This is the default. If there are both analog, digital, the receiver automatically selects the best possible signal.

22 INPUT ATT button (VSX-33TX Only)
Use to lower the input level of an analog signal that is too powerful, thus causing the sound to distort (the OVER indicator will light when this is the case).

■ Display (for VSX-35TX)

All the display information is explained and /or referenced here.

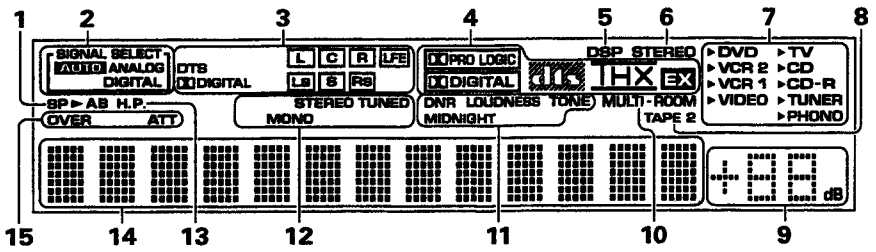

1 Speaker indicators
Light to indicate the current speaker system, A and/or B.

2 SIGNAL SELECT indicators
Light to indicate the input signal you selected.

ANALOG – Lights when analog signals are assigned.
DIGITAL – Lights when digital audio signals are selected.
AUTO – Lights when the receiver is set to select the input signal automatically.

3 Program Format indicator
DIGITAL – Lights when a source with Dolby Digital signals is played.

DTS – Lights when a source with DTS audio signals is played.

For Dolby Digital or DTS sources: These indicators change according to which channels are active in the source. When all three LS (left surround), S (surround) and RS (right surround) light at the same time it means a SURROUND EX source or a DTS ES source with surround back channels is being used.

L – Left front channel.
C – Center channel.
R – Right front channel.
LS – Left surround channel.
S – Surround channel (mono).
RS – Right surround channel.
LFE – Low Frequency Effects channel.

4 /dts mode indicators
DIGITAL – Indicates multi channel playback of a Dolby Digital source.

PRO LOGIC – Lights when Dolby Pro Logic decoding is switched on.

dts – When the /dts mode on the receiver is on, this indicator lights to indicate playback of a DTS signal.

THX – Lights when the HOME THX CINEMA mode is selected.

EX – Lights when decoding a Surround EX source.

5 DSP indicator
Light when a DSP or Advanced Theater mode is selected.

6 STEREO indicator
Lights when a STEREO mode is selected.

7 Source indicators
► indicator lights at the selecting source.

8 TAPE 2 indicator
Lights when the TAPE 2 monitor is on.

9 MASTER VOLUME indicator
Displays current volume level.

10 MULTI-ROOM indicator
Lights when the Multi-room system is on.

11 Sound control indicators
DNR – Lights when the digital NR is on.
LOUDNESS – Lights when the Loudness is on.
TONE – Lights when the Tone control is on.
MIDNIGHT – Lights when the Midnight mode is on.

12 Tuner indicators
STEREO – Lights when a FM stereo broadcast is received in the auto stereo mode.
TUNED – Lights when a broadcast is received.
MONO – Lights when the tuner is set to receive FM broadcasts with the mono mode selected.

13 H.P. (headphones)
Lights when headphones are connected to the PHONES jack (speakers systems A and B both turn off automatically).

14 Character display
Shows current mode, status, etc.

15 Analog level indicators
OVER – When the source signal is analog, this lights if the signal is in danger of distorting. Press INPUT ATT on the remote control to lower the signal level.

ATT – Lights when INPUT ATT is used to reduce the level of the analog source signal.

■ Remote Control Unit (VSX-35TX)

These pages describe the buttons on the remote control used to operate the receiver.

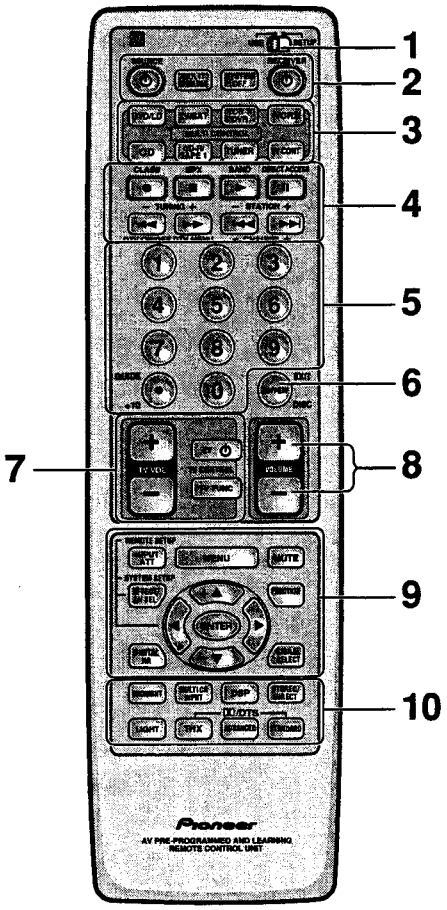

1 USE/SETUP slide switch
Use to put the remote into receiver SETUP, or receiver USE mode.

2 ⏻ SOURCE button
Use to turn on the power of your other components after you have recalled or taught the signals to this remote control.

MULTI OPERATION button
Use this button to start the MULTI OPERATION mode. for how to program and use the MULTI OPERATION mode.

SYSTEM OFF button
This button turns off components in two ways. First, when pressed it will turn off all PIONEER components. Secondly, any component that has programmed into the MULTI OPERATIONS settings will also be turned off

For example : If you programmed power on for your TV and VCR, pressing the SYSTEM OFF button will turn off these components even if they are not PIONEER products.

⏻ RECEIVER button
Press to turn power of the receiver on or to STANDBY (off).

3 MULTI CONTROL buttons
Use these to select a source and the corresponding remote operation mode.

For example, pressing TUNER selects the built in tuner and sets the remote operation to the tuner functions.

4 Component Control buttons
Use to control specific components, like a CD player or DVD player, after you have programmed the remote control to do these operations and the remote is put in that operation mode.

[Tuner control]

CLASS – Press repeatedly to switch the preset station classes.
MPX – Press to switch between auto stereo and MONO reception of FM broadcasts.
BAND – Press to select AM or FM band.
DIRECT ACCESS – Press to activate the direct access tuning mode.
TUNING +/– – Use to manually tune in to radio stations.
STATION +/– – Use to choose programmed radio stations.

5 Number buttons
These buttons can perform a variety of different functions depending on the remote operation mode. They are most useful for CD and tuner operations.

6 ENTER button
Use for controlling other components only.

7 TV CONTROL buttons
The following buttons are used to control the TV only and can be used no matter what function the remote control is set to.

TV ⏻ button – Press to turn the power of the TV on/off.

TV FUNC button – Press TV FUNC to select the TV for remote control operation.

TV VOL +/– button – Use to adjust the TV volume.

http://www.manualscenter.com

8 MASTER VOLUME buttons
Use to raise or lower the volume of the receiver.

9 INPUT ATT button (when USE mode is selected)
Use to lower the input level of an analog signal that is too powerful, thus causing the sound to distort (the OVERLOAD indicactor will light).

REMOTE SETUP button (when SETUP mode is selected)
Use to customize the remote control functions and the remote control itself. (See "Setting Up the Remote Control to Control Other Components" , "Multi Operations"

MENU button
Use to get the various menus for your DVD, TV or DTV.

MUTE button
Press to mute or restore the volume.

EFFECT/CH SEL (when USE mode is selected) button .
EFFECT – Use these buttons to increase or decrease the amount of effect applied in a DSP or Advanced Theater mode. When the amount of effect is increased in a DSP/Advanced Theater mode the characteristics of that mode become stronger and more noticeable. The scale ranges from 10-90 with 70 as the default setting. First turn on the DSP/Advanced Theater you want (by pressing the DSP/ Advanced Theater button until you get the mode) and then increase or decrease the amount of effect.

CH SEL – You may want to adjust the channels when listening to some sound sources. Use this button to select the channel you want to adjust.

SYSTEM SET UP button (when SETUP mode is selected)
Use to set up the speaker and sound systems. For more information see "Setting up for Surround Sound" .

FUNCTION button
Press to select a source. The button will cycle through all the possible sources.

▲(+)/▼(–)/◄/►/ENTER buttons
Use to operate the on-screen menu on your TV screen and enter commands when setting up surround sound, speakers levels & settings, and other set up features .

They also can be used to operate DVD players, DTVs and other components after you have input the components preset codes. Specific use of these buttons is described in conjunction with the operations they perform. For more information see each individual section.

DIGITAL NR button
Press to switch Digital NR on or off.

SIGNAL SELECT button
Press SIGNAL SELECT repeatedly to select one of the following:

ANALOG – Analog signal.

DIGITAL – Digital signal (DVD/LD, TV/SAT, CD, CD-R/TAPE 1, VCR 1/DVR, VCR 2, VIDEO).

AUTO – This is the default. If there are analog, or digital signals input the receiver automatically selects the best possible signal.

10 MIDNIGHT button
Switches the MIDNIGHT mode on or off.

MULTI CH INPUT button .
Press to switch to multi channel input mode.

DSP button
Press to select a DSP sound mode. Repeated presses cycle through the diffferent possible DSP modes.

STEREO/DIRECT button
Switches the receiver into STEREO mode if it was in a different sound mode (like ADVANCED THEATER) or or toggles between DIRECT and STEREO mode. For more on STEREO mode .

DIRECT playback bypasses the tone controls and channel level for the most accurate reproduction of a program source.

LIGHT button
Press to light the remote control buttons.

DD /DTS buttons
Press these buttons to put the receiver in the selected sound mode. For more information on these specific sound modes .

8.2 SPECIFICATIONS

Amplifier Section

VSX-35TX :

Continuous average power output of 90 watts* per channel, min., at 8 ohms, from 20 Hz to 20,000 Hz with no more than 0.09 % total harmonic distortion (front).**

Continuous Power Output
- Front ..... 90 W + 90 W (20 Hz – 20 kHz, 0.09 %, 8 Ω)
- Center ..... 90 W (20 Hz – 20 kHz, 0.09 %, 8 Ω)
- Rear ..... 90 W + 90 W (20 Hz – 20 kHz, 0.09 %, 8 Ω)

Input (Sensitivity/Impedance)
- PHONO MM ..... 4.7 mV/47 kΩ
- VCR 1/DVR, VCR 2, DVD/LD, TV/SAT, VIDEO, CD, CD-R/TAPE 1/MD, TAPE 2 ..... 335 mV/47 kΩ

Phono Overload level (T.H.D.0.1 %, 1kHz)
- PHONO MM ..... 120 mV

Frequency Response
- PHONO MM ..... 20 Hz to 20,000 Hz ± 0.3 dB
- VCR 1/DVR, VCR 2, DVD/LD, TV/SAT, VIDEO, CD, CD-R/TAPE 1/MD, TAPE 2 ..... 5 Hz to 100,000 Hz dB

Output (Level/Impedance)
- VCR 1/DVR REC, VCR 2 REC, CD-R/TAPE 1/MD REC, TAPE 2 REC ..... 335 mV/2.2 kΩ

Tone Control
- BASS ..... ± 6 dB (100 Hz)
- TREBLE ..... ± 6 dB (10 kHz)
- LOUDNESS ..... +10 dB (100 Hz/10 kHz)

Signal-to-Noise Ratio (IHF, short circuited, A network)
- PHONO MM ..... 80 dB
- VCR 1/DVR, VCR 2, DVD/LD, TV/SAT, VIDEO, CD, CD-R/TAPE 1/MD, TAPE 2, MULTI CH IN ..... 101 dB

Signal-to-Noise Ratio [EIA, at 1 W (1 kHz)]
- PHONO MM ..... 80 dB
- VCR 1/DVR, VCR 2, DVD/LD, TV/SAT, VIDEO, CD, CD-R/TAPE 1/MD, TAPE 2 ..... 83 dB

* *Measured pursuant to the Federal Trade Commission's Trade Regulation rule on Power Output Claims for Amplifiers.*

** *Measured by Audio Spectrum Analyzer.*

VIDEO Section (S jack)

Input (Sensitivity/Impedance)
- VCR 1/DVR, VCR 2, VIDEO, DVD/LD, TV/SAT
  - Luminance signal (Y) ..... 1 Vp-p/75 Ω
  - Chrominance signal (C) ..... 0.286 Vp-p/75 Ω

Output (Level/Impedance)
- VCR 1/DVR, VCR 2, MONITOR OUT
  - Luminance signal (Y) ..... 1 Vp-p/75 Ω
  - Chrominance signal (C) ..... 0.286 Vp-p/75 Ω

Frequency Response
- VCR 1/DVR, VCR 2, VIDEO, DVD/LD, TV/SAT
  - Luminance signal (Y) ..... 5 Hz to 10 MHz dB

Signal-to-Noise Ratio
- Luminance signal (Y) ..... 65 dB

Component Video Section

Input (Sensitivity)
- Y ..... 1 Vp-p/75 Ω
- PB/PR ..... 0.7 V

Output (Level/Impedance)
- Y ..... 1 Vp-p/75 Ω
- PB/PR ..... 0.7 V

Frequency Response
- Y ..... 5 Hz to 20 MHz dB
- PB/PR ..... 5 Hz to 13 MHz dB

VIDEO Section (Composite)

Input (Sensitivity/Impedance)
- VCR 1/DVR, VCR 2, VIDEO, DVD/LD, TV/SAT ..... 1 Vp-p/75 Ω

Output (Level/Impedance)
- VCR 1/DVR, VCR 2, MONITOR OUT, MONITOR OUT2 ..... 1 Vp-p/75 Ω

Frequency Response
- VCR 1/DVR, VCR 2, TV/SAT, DVD/LD VIDEO→MONITOR OUT, ... 5 Hz to 10 MHz dB

Signal-to-Noise Ratio ..... 65 dB

FM Tuner Section

Frequency Range ..... 87.5 MHz to 108 MHz
Usable Sensitivity ..... Mono: 13.2 dBf, IHF (1.3 μV/75 Ω)
50 dB Quieting Sensitivity ..... Mono: 20.2 dBf
Stereo: 38.6 dBf
Signal-to-Noise Ratio ..... Mono: 73 dB (at 85 dBf)
Stereo: 70 dB (at 85 dBf)
Distortion ..... Stereo: 0.5 % (1 kHz)
Alternate Channel Selectivity ..... 60 dB (400 kHz)
Stereo Separation ..... 40 dB (1 kHz)
Frequency Response ..... 30 Hz to 15 kHz (± 1) dB
Antenna Input ..... 75 Ω unbalanced

AM Tuner Section

Frequency Range ..... 530 kHz to 1,700 kHz
Sensitivity (IHF, Loop antenna) ..... 350 μV/m
Selectivity ..... 25 dB
Signal-to-Noise Ratio ..... 50 dB
Antenna ..... Loop antenna

Miscellaneous

Power Requirements ..... AC 120 V, 60 Hz
Power Consumption ..... 400 W, 550 VA
Power Consumption in Standby mode ..... 1.0 W
AC Outlet SWITCHED (×2) ..... Total 100 W (0.8 A) MAX
Dimensions ..... 420 (W) × 173 (H) × 463 (D) mm
(16-9/16 (W) × 6-13/16 (H) × 18-1/4 (D) in.)
Weight (without package) ..... 15.0 kg (33 lb 1 oz)

Furnished Parts

FM wire Antenna 1
AM loop Antenna 1
"AA" IEC LR6 batteries 2
Remote Control Unit 1
Operating Instructions 1

NOTE:
Specifications and the design are subject to possible modifications without notice, due to improvements.

http://www.manualscenter.com

VSX-35TX, VSX-33TX

Amplifier Section
VSX-33TX :

Continuous average power output of 80 watts* per channel, min., at 8 ohms, from 20 Hz to 20,000 Hz with no more than 0.09 % total harmonic distortion (front).**

Continuous Power Output
- Front ..... 80 W + 80 W (20Hz-20 kHz, 0.09 %, 8 Ω)
- Center ..... 80 W (20Hz-20 kHz, 0.09 %, 8 Ω)
- Rear ..... 80 W + 80 W (20Hz-20 kHz, 0.09 %, 8 Ω)

Input (Sensitivity/Impedance)
- VCR 1/DVR, VCR 2, DVD/LD, TV/SAT, VIDEO, CD, CD-R/TAPE 1/MD, TAPE 2 ..... 335 mV/47 kΩ

Frequency Response
- VCR 1/DVR, VCR 2, DVD/LD, TV/SAT, VIDEO, CD, CD-R/TAPE 1/MD, TAPE 2 ..... 5 Hz to 100,000 Hz dB
- VCR 1/DVR REC, VCR 2 REC, CD-R/TAPE 1/MD REC, TAPE 2 REC ..... 335 mV/2.2 kΩ

Tone Control
- BASS ..... ± 6 dB (100 Hz)
- TREBLE ..... ± 6 dB (10 kHz)
- LOUDNESS ..... +10 dB (100 Hz/10 kHz)

Signal-to-Noise Ratio (IHF, short circuited, A network)
- VCR 1/DVR, VCR 2, DVD/LD, TV/SAT, VIDEO, CD, CD-R/TAPE 1/MD, TAPE 2 ..... 101 dB
- MULTI CH IN ..... 101 dB

Signal-to-Noise Ratio [EIA, at 1 W (1 kHz)]
- VCR 1/DVR, VCR 2, DVD/LD, TV/SAT, VIDEO, CD, CD-R/TAPE 1/MD, TAPE 2 ..... 83 dB

* *Measured pursuant to the Federal Trade Commission's Trade Regulation rule on Power Output Claims for Amplifiers.*

** *Measured by Audio Spectrum Analyzer.*

VIDEO Section (S jack)
Input (Sensitivity/Impedance)
- VCR 1/DVR, VCR 2, VIDEO, DVD/LD, TV/SAT
  - Luminance signal (Y) ..... 1 Vp-p/75 Ω
  - Chrominance signal (C) ..... 0.286 Vp-p/75 Ω

Output (Level/Impedance)
- VCR 1/DVR, VCR 2, MONITOR OUT
  - Luminance signal (Y) ..... 1 Vp-p/75 Ω
  - Chrominance signal (C) ..... 0.286 Vp-p/75 Ω

Frequency Response
- VCR 1/DVR, VCR 2, VIDEO, DVD/LD, TV/SAT
  - Luminance signal (Y) ..... 5 Hz to 10 MHz dB

Signal-to-Noise Ratio
- Luminance signal (Y) ..... 65 dB

VIDEO Section (Composite)
Input (Sensitivity/Impedance)
- VCR 1/DVR, VCR 2, VIDEO, DVD/LD, TV/SAT ..... 1 Vp-p/75 Ω

Output (Level/Impedance)
- VCR 1/DVR, VCR 2, MONITOR OUT ..... 1 Vp-p/75 Ω

Frequency Response
- VCR 1/DVR, VCR 2, TV/SAT, DVD/LD VIDEO→MONITOR OUT, ... 5 Hz to 10 MHz dB

Signal-to-Noise Ratio ..... 65 dB

FM Tuner Section
Frequency Range ..... 87.5 MHz to 108 MHz
Usable Sensitivity ..... Mono: 13.2 dBf, IHF (1.3 μV/75 Ω)
50 dB Quieting Sensitivity ..... Mono: 20.2 dBf
Stereo: 38.6 dBf
Signal-to-Noise Ratio ..... Mono: 73 dB (at 85 dBf)
Stereo: 70 dB (at 85 dBf)
Distortion ..... Stereo: 0.5 % (1 kHz)
Alternate Channel Selectivity ..... 60 dB (400 kHz)
Stereo Separation ..... 40 dB (1 kHz)
Frequency Response ..... 30 Hz to 15 kHz (± 1) dB
Antenna Input ..... 75 Ω unbalanced

AM Tuner Section
Frequency Range ..... 530 kHz to 1,700 kHz
Sensitivity (IHF, Loop antenna) ..... 350 μV/m
Selectivity ..... 25 dB
Signal-to-Noise Ratio ..... 50 dB
Antenna ..... Loop antenna

Miscellaneous
Power Requirements ..... AC 120 V, 60 Hz
Power Consumption ..... 400 W, 550 VA
Power Consumption in Standby mode ..... 1.0 W
AC Outlet SWITCHED (x2) ..... Total 100 W (0.8 A) MAX
Dimensions ..... 420 (W) × 173 (H) × 463 (D) mm
(16-9/16 (W) × 6-13/16 (H) × 18-1/4 (D) in.)
Weight (without package) ..... 14.6 kg (32 lb 3 oz)

■ Accessories (VSX-35TX / VSX-33TX)

FM wire antenna (ADH7004)

AM loop antenna (ATB7009)

"AA" IEC LR6 batteries x 2

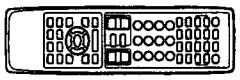

Remote control unit (Remocon35 : AXD7266) VSX-35TX (Remocon33 : AXD7267) VSX-33TX

Printed by: Schaltungsdienst Lange, Berlin (GERMANY)