SONY-04779

TA-H5600/H6600

SERVICE MANUAL

AEP Model
UK Model

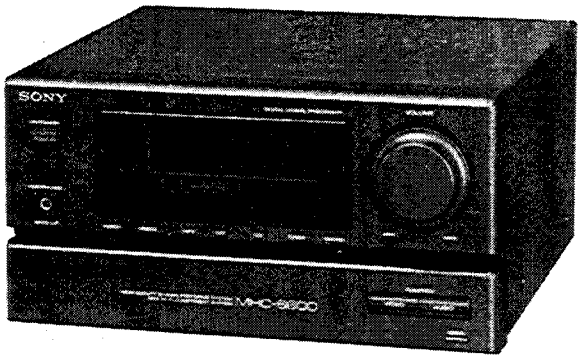

This unit is the Amplifier for the MHC-5600/6600 component system.

Photo is TA-H6600

SPECIFICATIONS

Continuous RMS power output
For satellite speaker:
28 + 28 W (8 chms at 1 kHz, DIN)
33 + 33 W (8 ohms at 1 kHz, 5% THD)
For bass speaker:
32 + 32 W (6 ohms at 110 Hz, DIN)
37 + 37 W (6 ohms at 110 Hz, 5% THD)

Music power output (for AEP and U.K.model)
For satellite speaker:
44 + 44 W (8 ohms at 1 kHz, 10% THD)
For bass speaker:
48 + 48 W (6 ohm at 110 Hz, 10% THD)

Peak music power output (EXCEPT AEP, UK)
550 W

Inputs
ADAPTOR (pin jacks):
sensitivity 260 mV
impedance 47 kilohms

Outputs
HEADPHONES (stereo minijack):
accepts headphones of 8 ohms or more.
ADAPTOR (pin jacks)
output level 260 mV
impedance 1 kilohms
SPEAKER (SATELLITE):
accepts speakers of 8 to 16 ohms.
SPEAKER (BASS):
accepts speakers of 6 to 16 ohms

STEREO AMPLIFIER

SONY®

TABLE OF CONTENTS

SAFETY-RELATED COMPONENT WARNING!!

COMPONENTS IDENTIFIED BY MARK ⚠ OR DOTTED LINE WITH MARK ⚠ ON THE SCHEMATIC DIAGRAMS AND IN THE PARTS LIST ARE CRITICAL TO SAFE OPERATION. REPLACE THESE COMPONENTS WITH SONY PARTS WHOSE PART NUMBERS APPEAR AS SHOWN IN THIS MANUAL OR IN SUPPLEMENTS PUBLISHED BY SONY.

Notes on chip component replacement

- Never reuse a disconnected chip component.
- Notice that the minus side of a tantalum capacitor may be damaged by heat.

Flexible Circuit Board Repairing

- Keep the temperature of the soldering iron around 270°C during repairing.
- Do not touch the soldering iron on the same conductor of the circuit board (within 3 times).
- Be careful not to apply force on the conductor when soldering or unsoldering.

MODEL IDENTIFICATION

– Specification Label –

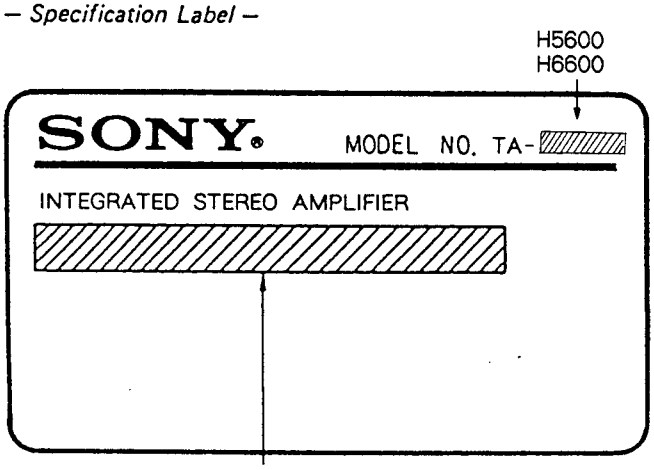

AEP, Germany Model : AC 220V~50/60Hz
Italian Model : AC 220V~50/60Hz
UK Model : AC 240V~50/60Hz

SECTION 1
GENERAL

This section is extracted from instruction manual.

LOCATION AND FUNCTION CONTROLS

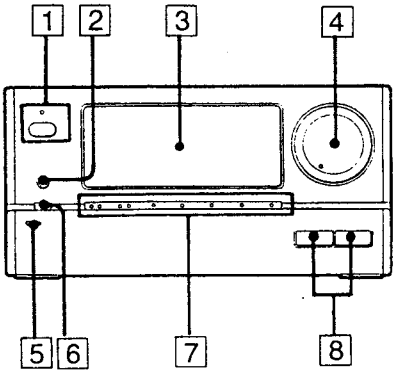

1 SYSTEM POWER switch and STANDBY indicator
The indicator remains lit as long as the AC power cord is connected to a wall outlet.
2 HEADPHONES jack (stereo minijack) 00
3 Display window
4 VOLUME control 28
5 OPEN tab
6 WAKE UP indicator 84
7 Function indicators X: 20 88
8 VIDEO and AUDIO FUNCTION selectors 20 88

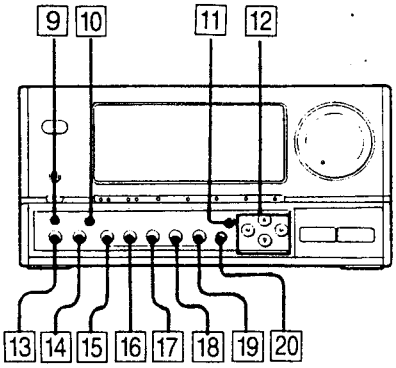

9 WAKE UP button 84
10 DISPLAY button 78
11 MEMORY button 56
12 CURSOR CONTROL button
13 DBFB (Dynamic Bass Feedback) button 26
14 BALANCE button 29
15 DSP button 72
16 PRESET buttons 74
17 DYNAMIC SOUND button 84
18 PARAMETRIC EQUALIZER button 80
19 PRESENCE SURROUND button 82
20 ON/OFF button 28 60 62 84

Audio Adjustment

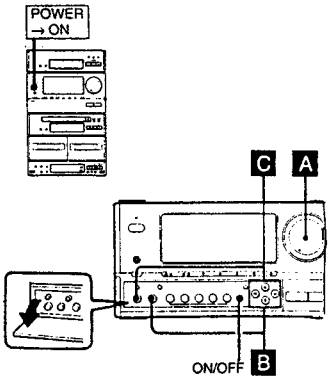

Volume Adjustment A

Turn VOLUME clockwise to increase the sound level, or counterclockwise to decrease it.
(Or press + or – on the remote commander.)

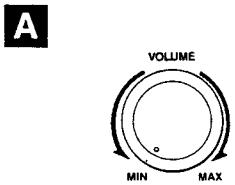

Balance Adjustment B

Adjust the balance of the speakers to correct the stereo imaging when the speaker position is not symmetrical.

1 Press BALANCE.

2 Adjust with CURSOR CONTROL ◄ or ►.

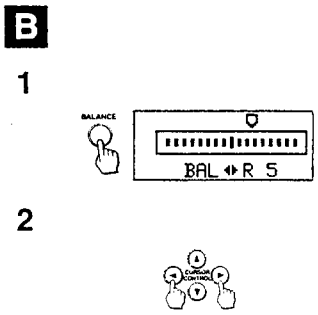

Reinforcing Bass – DBFB* C

1 Press DBFB.

2 Adjust with CURSOR CONTROL ▲ or ▼.
The more you press ▲, the more the bass is emphasized.

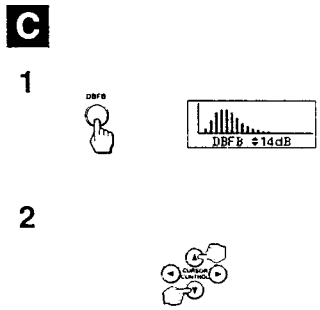

When you do not want to apply the DBFB effect
Press ON/OFF.

*DBFB = Dynamic bass feedback

For personal listening
Connect headphones to HEADPHONES.
No sound comes from the speakers.

Using the Digital Sound Effects

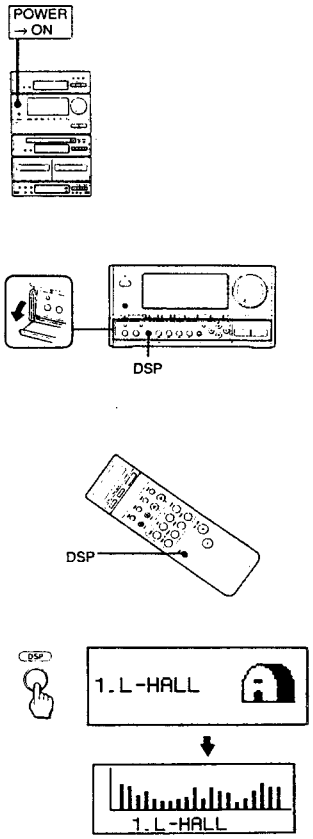

This unit incorporates a Digital Signal Processing (DSP) system which consists of a Digital Parametric Equalizer, a Digital Presence Surround Processor, and a Digital Dynamic Sound Controller. Using this DSP system, you can get the optimum sound for the kind of music you want to listen to.

Twelve recommended sound field programs (Digital Sound Menu) are preset at the factory for easy use. You can enjoy the digital sound effects by just choosing from the Digital Sound Menu according to the program source.

You can also create a variety of different sounds and effects by adjusting the Digital Sound Menu settings using three different sound manipulation functions.

Making full use of the DSP system allows you to maximize your music listening enjoyment.
You can also store up to six settings you have created in the memory (Personal File).

How to get the Digital Sound Effect

To adjust each of the Digital Sound Effect, you must activate the DSP system first.

Press DSP.

When the DSP is working, one of the 12 Digital Sound Menus (page 74) or one of the six Personal Files (page 86) displays in the display window.

To cancel the DSP effect
Press DSP again.
The Digital Sound Menu or the Personal File disappears and the display shows "EFFECT OFF."

Using the Digital Sound Effects

Enjoying the Digital Sound Menu

When the system is shipped from the factory, 12 specially recommended combinations of settings for the Parametric Equalizer, Presence Surround and Dynamic Sound (Digital Sound Menu) are stored. Since these programs are appropriate for most types of music and listening situations, you can enjoy the digital sound effects by just choosing from the Digital Sound Menu according to the program source.

Before you start
If "EFFECT OFF" is displayed, press DSP to activate the DSP system.

1 **Press PRESET.**
The display shows a "menu display" (choices) of the Digital Sound Menu.

2 **Select the Digital Sound Menu using CURSOR CONTROL and by referring to the table on page 76.**
The selected Digital Sound Menu displays and the sound effect starts two seconds after releasing the CURSOR CONTROL buttons. Then, the display goes back to its normal state (see page 78).

To display the next or previous menu a
Press ▲ or ▼.

To move the cursor b
Press ◄ or ►.

To select the Digital Sound Menu directly
(Possible with the remote commander only)

1 Press DSP on the remote commander so that "DSP" appears on the display on the remote commander.
2 Press the numeric button A for the desired Digital Sound Menu

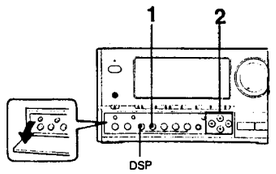

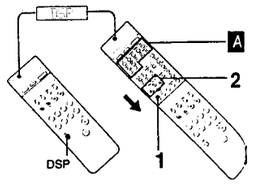

1
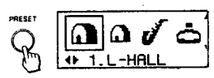

2
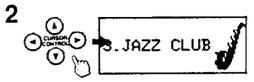

a
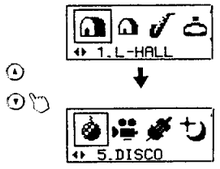

b
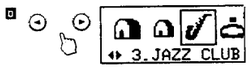

Using the Digital Sound Effects

	Display	Applications
1	L-HALL	1
2	S-HALL	2
3	JAZZ CLUB	3
4	STADIUM	4
5	DISCO	5
6	MOVIE	6
7	SYMPHONY	7
8	NIGHT	8
9	BGM	9
10	SIMULATED	10
11	WM	11
12	CAR	12

1 Gives the atmosphere of a large hall which seats more than 2000 people.
2 For chamber music or an instrumental solo.
3 For jazz.
4 For a live concert in an open-air stadium.
5 Gives a sound similar to a disco which has hard floors and walls.
6 For DOLBY surround encoded video programs.
7 For orchestral music.
8 For enjoyment of sound at low listening levels.
9 For background music.
10 Gives width to a monaural program source.
11 For recording a tape to be listened to with stereo headphones.
12 For recording a tape to be listened to in a car.

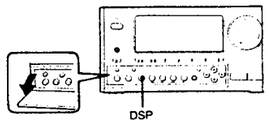

Using the Digital Sound Effects

Changing the Display

(Not possible with the remote commander)

Each time you press DISPLAY, the display changes in the following order:

a Spectrum analyzer 1
b Spectrum analyzer 2
c Digital Sound Menu Display

Note:
When the DSP system is not on, the display shows "EFFECT OFF" instead of the selected Digital Sound Menu.

To make the display move with the music A
(Not possible with the remote commander)

You can make the picture in the display move to the rhythm of the music as an animation. The picture moves quickly when the music is fast, slowly when the music is slow, and stops when the music stops. You can enjoy this effect along with any sound effect available with this unit.

Press BALANCE and DISPLAY at the same time.

The picture that represents the selected Digital Sound Menu starts moving. Each Digital Sound Menu has a different picture for this effect.
The illustration A shows an example of this effect when the Digital Sound Menu "CAR" is selected. There is also a picture for when the DSP system is not active.

To exit this mode
Press DISPLAY.

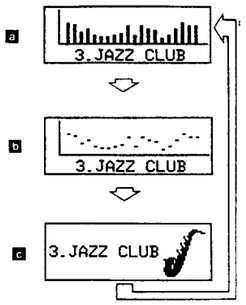

A

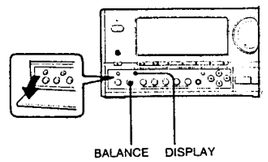

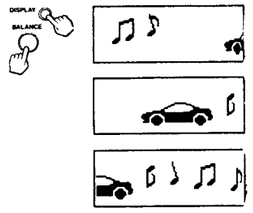

Using the Digital Sound Effects

Using the Digital Parametric Equalizer

This function allows you to adjust the sound by raising and lowering the levels of specific frequency ranges.

Before you start
If "EFFECT OFF" is displayed, press DSP to activate the DSP system.

1 **Select the Digital Sound Menu (See page 74.)**

2 **Select the frequency range you wish to adjust by pressing PARAMETRIC EQUALIZER. (P.EQ on the remote commander)**
Each time you press it, the frequency range in the Equalizer display changes as follows:
PEQ 1 → PEQ 2 → PEQ 3

Display	Frequencyr ange
PEQ 1	Low range
PEQ 2	Middle range
PEQ 3	High range

When the unit is shipped from the factory, each of the three frequency positions is defined for a specific frequency range as shown in the above table.
The adjustable frequency range can be freely moved from left to right (low → high) along the frequency scale as explained in the next step. This allows each of the frequencies (PEQ 1 – 3) to be used for any frequency range. For example, PEQ 1 does not have to be used to adjust a low-frequency range, but can be used instead to adjust a mid- or high-frequency range by moving it to the right along the scale.

3 **Adjust the sound using CURSOR CONTROL.**
a ◄ or ►: Shifts the frequency range to be adjusted to the left or to the right.
b ▲ or ▼: Raises or lowers the level of the frequency range centering around the flashing dot

4 **If you wish to adjust the level of another frequency range, repeat steps 2 and 3.**
The "Equalizer display" disappears about 10 seconds after you adjust the sound.

Confirming the effect of the adjustment
Display the "Equalizer display" by pressing PARAMETRIC EQUALIZER and then press ON/OFF.
"±0 dB" displays and the equalizer curve becomes flat.
Each time you press ON/OFF, the sound switches back and forth between the adjusted settings and a flat curve, allowing you to hear and compare the difference.

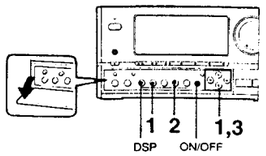

1
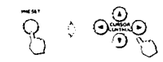

2
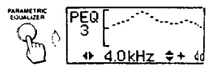

3

a
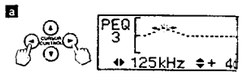

b
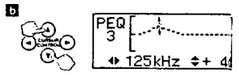

SONY-04779 / Druck 1

Using the Digital Sound Effects

Using the Digital Presence Surround Effects

The surround function allows you to adjust the length of the reverberation time and the level of the reverberated sound, putting you in control of a wide range of effects and sounds.
The surround effect adjustments should usually be set to match the size of the envisaged concert hall.
When you want to create the atmosphere of a small hall such as a live house or club, shorten the reverberation time.
When you want to create the atmosphere of a large hall such as a concert hall, lengthen the reverberation time.
If you want to add the feeling of being in a "live" hall where there is a lot of echo, increase the level (strength) of the reverberated sound. If you want to add the feeling of being in a "dead" hall where there is little echo, decrease the level of the reverberated sound.

Before you start
If "EFFECT OFF" is displayed, press DSP to activate the DSP system.

1 **Select the Digital Sound Menu. (See page 74.)**

2 **Press PRESENCE SURROUND. (SURROUND on the remote commander)**
The "Surround display" appears.

3 **Adjust the sound using CURSOR CONTROL.**
A To change the reverberation time (a)
To shorten the reverberation time, press ◄.
To lengthen the reverberation time, press ►.
B To change the level of the reverberated sound (b)
To increase the level, press ▲.
To decrease the level, press ▼.

The "Surround display" disappears about 10 seconds after you adjust the sound.

Confirming the effect of the adjustment
Display the "Surround display" by pressing PRESENCE SURROUND and then press ON/OFF. "---- dB" displays. Each time you press ON/OFF, the sound switches back and forth between the adjusted settings and no surround effect, allowing you to hear and compare the difference.

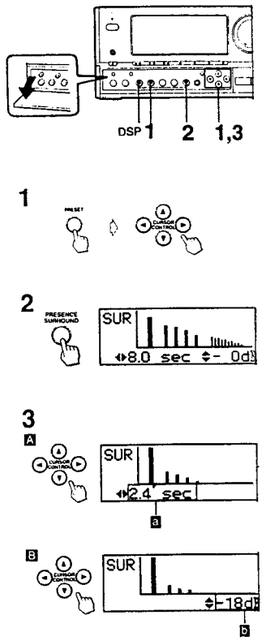

Using the Digital Sound Effects

Adjusting the Digital Dynamic Sound Controller

This unit allows you to select either of the two Dynamic Controls, Compressor (CP) or Noise Gate (NG).
The compressor compresses the dynamic range of the output signal to increase the average output level without distortion. This function is useful for obtaining dynamic sound at a small output level or when recording,a program source with a wide dynamic range, such as a compact disc or a cassette tape.
On the other hand, the Noise Gate limits the dynamic range of the input signal to eliminate undesired noise between tunes, etc.
You can set the Compressor or Noise Gate effect in seven increments: "CP.1" to "CP.4", "NG.1" to "NG.3".
The higher the number selected, the stronger the effect.
When the dynamic sound controller is set to "NORM," there is no special effect.

Before you start
If "EFFECT OFF" is displayed, press DSP to activate the DSP system.

1 **Select the Digital Sound Menu. (See page 74.)**

2 **Press DYNAMIC SOUND. (DDS on the remote commander)**
The "Dynamic Sound display" appears.

3 **Select the Compressor or Noise Gate using CURSOR CONTROL.**

The "Dynamic Sound display" disappears about 10 seconds after adjusting the sound.

Confirming the effect of the adjustment
Display the "Dynamic Sound display" by pressing DYNAMIC SOUND and then press ON/OFF. "NORM" displays. Each time you press ON/OFF, the sound switches back and forth between the adjusted settings and no Dynamic Sound effect, allowing you to hear and compare the difference.

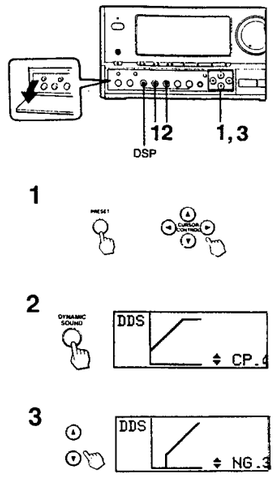

Using the Digital Sound Effects

Storing Your Individual Sound Effect Settings – Personal File

By storing your individual sound effect settings in the Personal File, you can easily call up the settings at any desired time. You can store up to six combinations of settings.

Before you start
If "EFFECT OFF" is displayed, press DSP to activate the DSP system.

1 **Obtain the desired sound effect. (See page 80, 82, 84)**

2 **Press MEMORY.**
"MEMORY menu display" (MEMORY and the letters A to F) appear on the display.

3 **Select a letter (A through F) using CURSOR CONTROL.**

4 **Press MEMORY while the "MEMORY menu display" is displayed.**

The Equalizer Curve, Presence Surround and Dynamic Sound settings are saved under the selected letter. The selected Personal File name appears on the display. The settings previously stored at this memory location are erased and replaced by the new settings.

If you do not press MEMORY in step 4
The "MEMORY menu display" disappears after about 10 seconds. The adjusted sound effect settings is not saved.

If you do not save the sound effect that you obtained
When you press PRESET, the sound effect settings are canceled and the sound goes back to the factory-set effect Store your individual settings before operating other buttons.

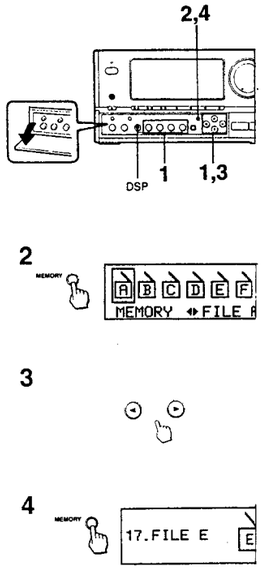

Using the Digital Sound Effects

Calling up settings from Personal File

Before you start
If "EFFECT OFF" is displayed, press DSP to activate the DSP system.

1 **Press PRESET.**
The "menu display" of the Digital Sound Menu appears.

2 **Select the Personal File with CURSOR CONTROL.**

To display the Personal File menu
Press ▲ or ▼.

To select the desired Personal File
Press ◄ or ►.

The selected Personal File displays and the sound effect starts two seconds after releasing the CURSOR CONTROL buttons. Then, the display goes back to its normal state (see page 78.)

To select the Personal File directly (Possible with the remote commander only)

1 Press DSP on the remote commander so that "DSP" appears on the display on the remote commander.
2 Press >12 and the numeric buttons.

Personal File A: >12 and 1
Personal File B: >12 and 2
Personal File C: >12 and 3
Personal File D: >12 and 4
Personal File E: >12 and 5
Personal File F: >12 and 6

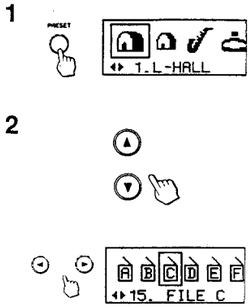

Storing the Volume Setting for Timer-Activated Operation Wake Up Volume

The volume setting is called up automatically when the power is turned on for timer-activated operation (page 128). This is convenient for when you want to wake up to music, etc. You can also use the Sleep Timer function (page 136) together with this function to listen to music in a low volume when you go to sleep, and in a high volume when you wake up.

1 **Adjust the VOLUME.**

2 **Keep WAKE UP depressed until "WAKE UP MEMORY" appears on the display.**
The WAKE UP indicator lights up.

When you do not want to use the Wake Up Volume
Press WAKE UP so that the WAKE UP indicator goes off.

To activate the Wake Up Volume again
Press WAKE UP again.

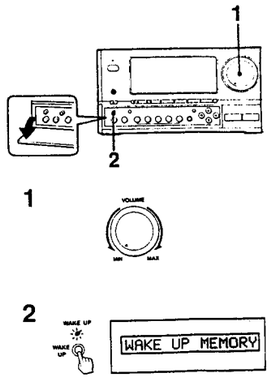

Sleep Timer Operation

By setting the sleep timer, the system power can be turned off after the preset duration (up to 90 minutes).
This operation is possible only with the remote commander.

1 **Play the desired program source.**

2 **Press SLEEP to select the desired duration in minute.**
As you press SLEEP, the indication changes as follows:
90 → 80 → .... → 10 → ...

To turn off the system before the system is turned off by the sleep timer
Press SYSTEM POWER.

To check the remaining time before the sleep timer turns off the system
Press SLEEP once, and the remaining time appears. The display returns to the previous indication automatically after several seconds.

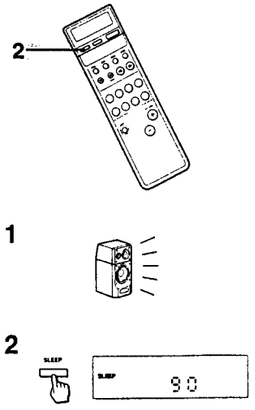

Editing the Sound with a Video Equipment

When you connect a video equipment with this system, you can edit the sound of the audio equipment with the picture of the video equipment.

1 **Press FUNCTION VIDEO (VIDEO 1 or VIDEO 2 on the remote commander) to select the video source.**
The green and red lamps of the program function indicators light up.

2 **Press FUNCTION AUDIO (TUNER, CD, TAPE or TAPE A/B, DAT or PHONO on the remote commander) to select the audio source.**
The green lamp of the video source (a) stays on and the red lamp goes off. The red lamp of the audio source (b) lights up.

The sound of selected the audio source is mixed with the picture of the selected video source.

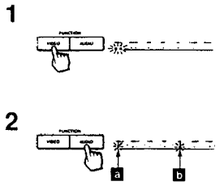

SONY-04779 / Druck 2

SECTION 2
DIAGRAMS

2-1. IC PIN DESCRIPTION

• IC101 Dual VCA IC for HiFi Electronic Volume (M5283P)

Pin No.	Name	Mark	Description
1	CH1 side (+) power supply	(+) Vcc	CH1 side power supply terminal
2	CH1 control terminal	Vc1	Controls the signal for ch1 side. Controls the signal by giving 0~5v of the voltage to this terminal. Requires approx. 30nA (standard) as bias current.
3	CH1 output terminal	OUT1	CH1 side output terminal
4 5	(-) power supply terminal	(−) Vcc	Terminals 4, 5, 12, 13 are connected internally.
6	CH1 grounding terminal	GND1	CH1 side grounding terminal (GND)
7	Not connected	NC	Condition is OPEN.
8	CH1 input terminal	IN1	CH1 side input terminal approx. 47K of resistance is inserted for DC bias between GND and this terminal (terminal 8).
9	CH2 input terminal	IN2	CH2 side input terminal approx. 47K of resistance is inserted for DC bias between GND and this terminal (terminal 9).
10	Not connected	NC	Condition is OPEN.
11	Grounding terminal	GND2	CH2 side grounding terminal (GND)
12 13	(-) power supply terminal	(−) Vcc	Terminals 4, 5, 12, 13 are connected internally.
14	CH2 input terminal	OUT2	CH2 side output terminal
15	CH2 control terminal	Vc2	Controls the signal for ch2 side. Controls the signal by giving 0~5v of the voltage to this terminal. Requires approx. 30nA (standard) as bias current.
16	CH2 side (+) power supply	(+) Vcc	CH2 side power supply terminal

• IC111 Digital Signal Operation for Audio (CXD2701Q)

Digital signal operation for 2 channel audio "LSI" which excutes reverberation function and equalizer function in 1 chip.

Pin No.	Pin Name	I/O	Description
1	IMODE	I	Input data format setting terminal Data position changes with "H", "L".
2	IDIR	I	Input data format setting terminal MSB first with "H", LSB first with "L".
3	DATAI	I	Serial data input terminal with 1 sampling, 2 channels. Data format is the complement of 2.
4	BCKI	I	Serial bit clock input terminal for serial input data.
5	LRCKI	I	Serial I/O sampling frequency clock input terminal. L-ch data is transferred with level "H", R-ch data is transferred with level "L".
6	Vss 1	—	GND terminal
7	DATAO	O	Serial data output terminal. Data format is the complement of 2.
8	BCKO	O	Bit clock output terminal. 64 slots.
9	LRCKO	O	Serial data sampling frequency clock output terminal
10	BS1	I	Output data, bit numbers setting terminal BS2 = H, BS1 = H 24bit BS2 = H, BS1 = L 20bit BS2 = L, BS1 = H 18bit BS2 = L, BS1 = L 16bit
11	BS2		
12	ODIR	I	Output data format setting terminal MSB first with "H", LSB first with "L".

Pin No.	Name	I/O	Description
13	V_{ss} 3	—	GND terminal
14	SCK	O	System clock output terminal. fsck = fxt = 512fs
15	XOUT	O	Quartz oscillation circuit output terminal
16	XIN	I	Quartz oscillation circuit input terminal
17	V_{DD} 1	—	+5V Power supply terminal
18	I/O4	I/O	Data input and output I/O4 for outside DRAM
19	I/O3	I/O	Data input and output I/O3 for outside DRAM
20	CAS	O	Outside DRAM column address strobe output terminal.
21	I/O2	I/O	Data input and output I/O2 for outside DRAM
22	I/O1	I/O	Data input and output I/O1 for outside DRAM
23	WE	O	Outside DRAM write enable output terminal. Valid with "L" level
24	A0	O	Outside DRAM address output A0
25	RAS	O	Outside DRAM row address strobe output terminal
26	A1	O	Outside DRAM address output A1
27	A2	O	Outside DRAM address output A2
28	Vss 2	—	GND terminal
29	A3	O	Outside DRAM address A3
30	A4	O	Outside DRAM address A4
31	A5	O	Outside DRAM address A5
32	A6	O	Outside DRAM address A6
33	A7	O	Outside DRAM address A7
34	A8	O	Outside DRAM address A8
35	TEST1	I	Test terminal. Normally fixed to GND.
36	TEST2	I	Test terminal. Normally fixed to GND.
37	TEST3	I	Test terminal. Normally fixed to GND.
38	TEST0	O	Tesr terminal
39	V_{DD} 2	—	+5V power supply terminal
40	PRGD	I	Serial data input terminal which receives the transmission of order, coefficient and control from the micro computer.
41	PRGCK	I	PRGD serial clock input terminal which receives data at positive edge.
42	PRGL	I	Latch input terminal to latch the serial data in IC from the microcomputer. Active "L".
43	INIT	I	Initialize terminal. Valid with "L". Re-synchronize at positive edge.
44	OVF	O	Output the over flow flag of DSP, L-ch MIX, R-ch MIX, L-ch EQ and R-ch EQ.

- IC109 Device Controller (M37450)
- The following items are conducted with the IC109 device controller.
- AU BUS is received and converted for transmission to feature controller (IC508).
- Devices such as DSP (IC111), DIO (IC123) and DPAC (IC112) are controlled in accordance with commands from feature controller (IC508).
- Tuner, deck and CD player are controlled by command transmissions to AU BUS.
- Power ON/OFF of CD players and cassette decks

Pin No.	Name	I/O	Description
1		—	Not used.
2	EV2	I	AU-BUS input
3	EV1	I	AU-BUS input
4	P57	O	AU-BUS output
5	P56	I	AU-BUS input
6	DBDATA	O	LC7822 (DBFB) control (serial data)
7	DBCE	O	LC7822 (DBFB) control (chip enable)
8	DBCLK	O	LC7822 (DBFB) control (clock)
9	DBRES	O	LC7822 (DBFB) control (reset)
10		—	Not used (OPEN).
11	MUTE	O	After VCA Mute. Low : Mute
12, 16	AMUTE	O	Analog Mute. Low : Mute
13	2DB	O	EQ Gain Switch + 2dB * 1
14	4DB	O	EQ Gain Switch + 4dB * 1
15	8DB	O	EQ Gain Switch + 8dB * 1
17		—	Not used.
18	DINERR	I	CDX2905Q (DIO) status input. High : Unlock
19	INT1	I	Not used (GND).
20-24		—	Not used (OPEN).
25	CNV_{ss}	—	Power supply terminal (GND)
26	RESET	I	System reset input
27		—	Not used (OPEN).
28	XIN	I	Clock input (8MHz)
29	XOUT	O	Clock output
30, 31		—	Not used (OPEN).
32	V_{ss}	—	Power supply terminal (GND)
33		—	Not used (OPEN).
34	CDOFF	O	Power control for CDP-H6600, TC-H5600/H6600. Low : POWER ON
35		—	Not used (OPEN).
36	FRES	I	Function request from analog function controller in TC-H5600/H6600.
37	FS48	I	Receives the sampling frequency information from CXD2905Q (DIO). H : fs = 48KHz
38	2701LT	O	Latch to CXD2701Q (DPS + EQ).
39	DEVCLK	O	Data and shift clock to CXD2905Q, CXD1160AX, CXD2701Q.
40	DEVDATA	O	Data and shift clock to CXD2905Q, CXD1160AX, CXD2701Q.
41		—	Not used (OPEN).
42	FS32	I	Receives the sampling frequency information from CXD2905Q (DIO). H : FS = 32KHz
43	DIORDY	I	Handshake with CXD2905Q (DIO). Ready with High.
44		—	Not used (OPEN).
45	DIOIFST	O	CPU I/F for CXD2905Q
46	VCO/XTA	O	VCO/X'tal select. Low for Analog input.
47	AD/DIN	O	AD/DIN select. High for Analot input.
48	EMPH	I	Receives the emphasis information from CXD2905Q (DIO). H : Emphasis On

Pin No.	Name	I/O	Description
49	CD/DAT	O	CD/DAT DIN select. L : CD, H : DAT
50	DIOIFINI	O	Initializes CPU I/F in CXD2905Q (DIO).
51	INITDA	—	Not used (OPEN).
52	INITDIO	O	CXD2905Q (DIO) reset
53	DOENA	O	Enable and Disable for digital Out
54	NENA	O	Enable output for noise generator of CXD8245M.
55	INIT EQ/D	O	Reset for CXD2701Q and CXD2560M
56	DPAC LT	O	Latch to CXD1160AQ (DPAC)
57	INIT AD	O	Initialization and calibration for CS5339 (A/D). Normal with Low.
58-62	P47-P43	—	Not used (OPEN).
63	NOSIGR	I	Low with no-digital signal
64	NOSIGL	I	Low with no-digital signal
65	AN	—	Not used (OPEN).
66	D-A2	O	D/A output to VCA
67	D-A1	O	D/A output to VCA
68	DAVref	—	Power supply terminal (+5V)
69	ADVref	—	Power supply terminal (+5V)
70	AV_{SS}	—	Power supply terminal (GND)
71	AS_{CC}	—	Power supply terminal (+5V)
72	V_{CC}	—	Power supply terminal (+5V)
73	V_{SS}	—	Power supply terminal (GND)
74, 75		—	Not used (OPEN).
76	TXD	O	Transmission output to MC68HC11 (feature controller). 4800 bps
77	RXD	I	Transmission input to MC68HC11 (feature controller). 4800 bps
78 – 80		—	Not used (OPEN).

※1 Equalizer gain switch

EQ gain [dB]	– 12~0	2	4	6	8	10	12
⑬ pin + 2dB	H	L	H	L	H	L	H
⑭ pin + 4dB	H	H	L	L	H	H	L
⑮ pin + 8dB	H	H	H	H	L	L	L

● IC506 Display Controller (TMP91C640F – 2302)

The FL tube display is controlled with the display command from feature controller (IC506).

Pin No.	Pin Name	I/O	Description
1~11	——	I	Not used. (GND)
12	STB B	I	DATA send LATCH input from IC508
13,14	——	I	Not used. (GND)
15	$\overline{NMI}$	I	AC power supply interrupt detect input. (Normally set to "H".) Once "L" is received, the operation is terminated until the Pin No. 16 RESET is cancelled.
16	$\overline{RESET}$	I	Reset input. Resets when "L".
17	CLK		Not used. (GND)
18~25	PO0~PO7	I/O	Display command input from IC508
26	Vss	—	Power supply terminal (GND)
27	X1	I	Clock input (15 MHz)
28	X2	O	Clock output (15 MHz)
29,30	——	—	Not used. (Open)
31	STB A	O	DATA receive LATCH output to IC508
32	REQUEST	O	Normally set to "L". The Pin No. ⑱~㉕ ports are output when "H".
33~36	——	—	Not used. (Open)

Pin No.	Pin Name	I/O	Description
37~44	——	I	Not used. (GND)
45	——	—	Not used. (Open)
46	DCLR	O	Normally set to "H". Grid is not displayed when "L". DCLR is used for AC outlet ON/OFF only.
47	SCLR	O	Normally set to "L". Segment is not displayed when "H". SCLR is used for AC outlet ON/OFF only.
48	LATCH	O	Data LATCH output to IC501~IC505
49	$\overline{EA}$	I	Not used. (Pull-up)
50,51	——	I	Not used. (GND)
52	SCLK	O	Segment display clock output to IC502, IC503 and IC505 (segment drivers)
53	SDATA	O	Serial data output to IC502, IC503 and IC505 (segment drivers)
54	——	—	Not used. (GND)
55	DCLK	O	Grid display clock output to IC501 and IC504 (grid drivers)
56	DATA	O	Serial data output (approx. 10 msec sync pulse) to IC501 and IC504 (grid drivers)
57	——	—	Not used. (GND)
58	Vcc	—	Power supply terminal (+5 V)
59	Vref	—	Power supply terminal (+5 V)
60	A GND		Power supply terminal (GND)
61~64	——	—	Not used. (GND)

• IC508 Feature Controller (MC68H011E9-FU)

General controls such as FL display (IC506), IC109 control, spectrum analyzer input, and ON/OFF of mute, relay and LED, are conducted with the AU BUS data and key input from device controller (IC109).

Pin No.	Pin Name	I/O	Description
1	PA0	I	Specification select input (H5600 : L) (H6600 : H)
2~4	NC	—	Not used. (GND)
5	——	O	Not used. (Open)
6~12	LED A~G	O	LED output. Lights up when "H". Conducts dynamic light up at Pin No. ⑲ (LED SW).
13~16	Spectrum analyzerA~D	I	Spectrum analyzer data input (Analog)
17	VOL DATA	I	Volume (RV601) position detect input (Analog)
18	PE 6	I	Specification select input
19	KEY A	I	} Key input (Analog)
20	KEY B	I	} Key input (Analog)
21	VRL	—	A/D converter (internal) power supply (GND)
22	VRH	—	A/D converter (internal) power supply (+5.6 V)
23, 24	Vss	—	Power supply terminal (GND)
25	MODE B	I	Mode select input (Pull-up fixed)
26	NC	—	Not used. (GND)
27	MODE A	I	Mode select input (GND fixed)
28	STR A	I	DATA receive LATCH input from IC506
29	E	O	Not used. (Open)
30	STR B	O	Data send LATCH input to IC506
31	EXTAL	I	Clock input (8 MHz)
32	NC	—	Not used. (Open)
33	XTAL	O	Clock output
34	PCO	I/O	Display command output to IC506
35	NC	—	Not used. (Open)
36~42	PC1~PC7	I/O	Display command output to IC506
43	$\overline{RESET}$	I	Reset input. Resets when "L".
44	NC	—	Not used. (GND)
45	$\overline{IRQ}$	I	Not used. (+5.6 V)

Pin No.	Pin Name	I/O	Description
46	$\overline{XIRQ}$	I	AC power supply interrupt detect input. (Normally set to "H".)
47	RX	I	Serial data input from IC109
48	NC	—	Not Used. (Open)
49	Vss	—	Power supply terminal (GND)
50	TX	O	Serial data output to IC109
51	POWER	O	Power relay (RY901) ON/OFF output. Active when "H".
52	SPEAKER	O	Speaker relay (RY801, 802) ON/OFF output. Active when "H".
53	MUTE	O	Muting output. Mutes when "L".
54	HP	I	Headphones switch input. "L" when headphones are connected.
55	V_{DD}	—	Power supply terminal (+5.6 V)
56	VOL UP	O	UP signal output to volume motor (RV601)
57	VOL DOWN	O	DOWN signal output to volume motor (RV601)
58	——	—	Not used (Open)
59	SPASW A	O	LED dynamic display/spectrum analyzer select output (3.5 msec square wave)
60, 61	NC	—	Not used. (GND)
62	SPASW B	O	Spectrum analyzer select output (2 msec square wave)
63	REQUEST	I	Normally set to "L". The Pin No. ㉞, and ㊱~㊷ ports are input when "H".
64	——	I	Not used. (GND)

• Test Mode

A test mode is provided to conduct FL tube (FL501) lighting test without disassembling the unit.

Press and release the POWER button while pressing the DISP button during the power ON condition. Release the DISP button to enter the Test Mode.
The following three types of patterns will be displayed each time the DISP button is pressed during this condition.

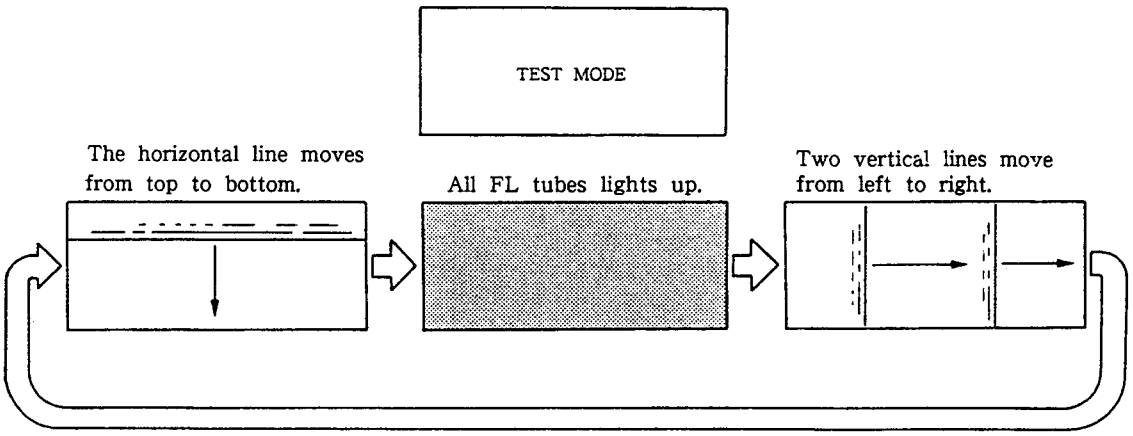

Other amplifier operations are identical to those during normal conditions (i.e. non-test mode condition). To exit the Test Mode, switch the power ON again.

• IC331 Pulse D/A Converter (CXD2561M)
The converter is a small, high-performance 1 bit pulse D/A converter that provides 4 asymmetrical PWM wave outputs in each ch of L/R.

Pin No.	Pin Name	I/O	Description
1	DV_{DD}	—	Digital power supply
2	TEST	I	Test terminal. Normally fixed at "L".
3	INIT	I	Again synchronized at the buildup edge of the signal.
4	LRCKI	I	LRCK input
5	DRI	I	Rch data input
6	DLI	I	Lch data input
7	BCKI	I	BCK input
8	DVss	—	Digital GND
9	512Fs	O	512Fs output
10	XVss	—	Clock GND
11	XIN	I	X'tal oscillator input terminal (512Fs)
12	XOUT	O	X'tal oscillator output terminal
13	XV_{DD}	—	Clock power supply
14	VSUB	—	Substrate. Connected to GND.
15	$AV_{DD}R$	—	Analog power supply
16	R1 (+)	O	Rch PLM output 1 (normal phase)
17	AVssR	—	Analog GND
18	R1 (−)	O	Rch PLM output 1 (reverse phase)
19	R2 (+)	O	Rch PLM output 2 (normal phase)
20	R2 (−)	O	Rch PLM output 2 (reverse phase)
21	AV_{DD}	—	Analog power supply
22	AVss	—	Analog GND
23	L2 (−)	O	Lch PLM output 2 (reverse phase)
24	L2 (+)	O	Lch PLM output 2 (normal phase)
25	L1 (−)	O	Lch PLM output 1 (reverse phase)
26	AVssL	—	Analog GND
27	L1 (+)	O	Lch PLM output 1 (normal phase)
28	$AV_{DD}L$	—	Analog power supply

• IC332 Digital Filter (CXD2560M)
The filter is a digital audio 8x oversampling digital filter with built-in L/R 2ch filter, noise shaping attenuator, softmuting deemphasis, etc.

Pin No.	Pin Name	I/O	Description
1	Vss	—	Power terminal (GND)
2	SYSM	I	System mute input. Effective upon "H"
3	ATT	I	ATT data input in CTL "L." EMP input upon CTL "H."
4	SHIFT	I	Shift clock input upon CTL "L." FS32 input upon CTL "H."
5	LATCH	I	Latch clock input upon CTL "L." FS48 input upon CTL "H."
6	CTL	I	Pull-down in the IC. Direct input mode upon "H." Serial transfer mode upon "L."
7	INIT	I	Synchronized again at the buildup edge of the signal.
8	BCKI	I	BCK input
9	DATAI	I	Data input
10	LACKI	I	LRCK input
11	TEST	I	Test terminal. Fixed at "L" during normal use.
12	Vss	—	Power terminal (GND)
13	128Fs	O	128Fs clock output
14	INVI	I	Inverter input
15	INVO	O	Inverter output
16	INVO2	O	Inverter output
17	MCLK	I	Master clock input (f=512Fs)
18	V_{DD}	—	Power terminal (+5 V)
19	BCKO	O	BCK output
20	DL	O	Lch data output.
21	DR	O	Rch data output
22	LRCKO	O	LRCK output
23	FLGL	O	Lch ϕ mute flag output
24	FLGR	O	Rch ϕ mute flag output

2-2. CIRCUIT BOARDS LOCATION

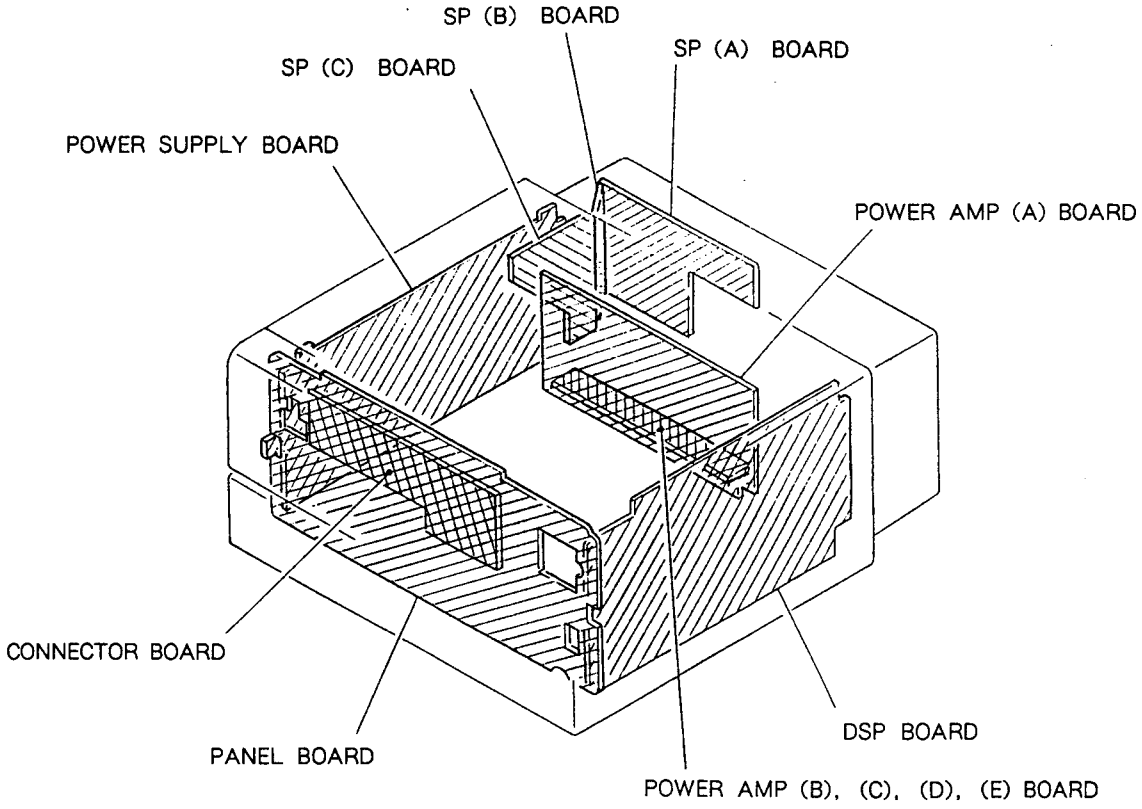

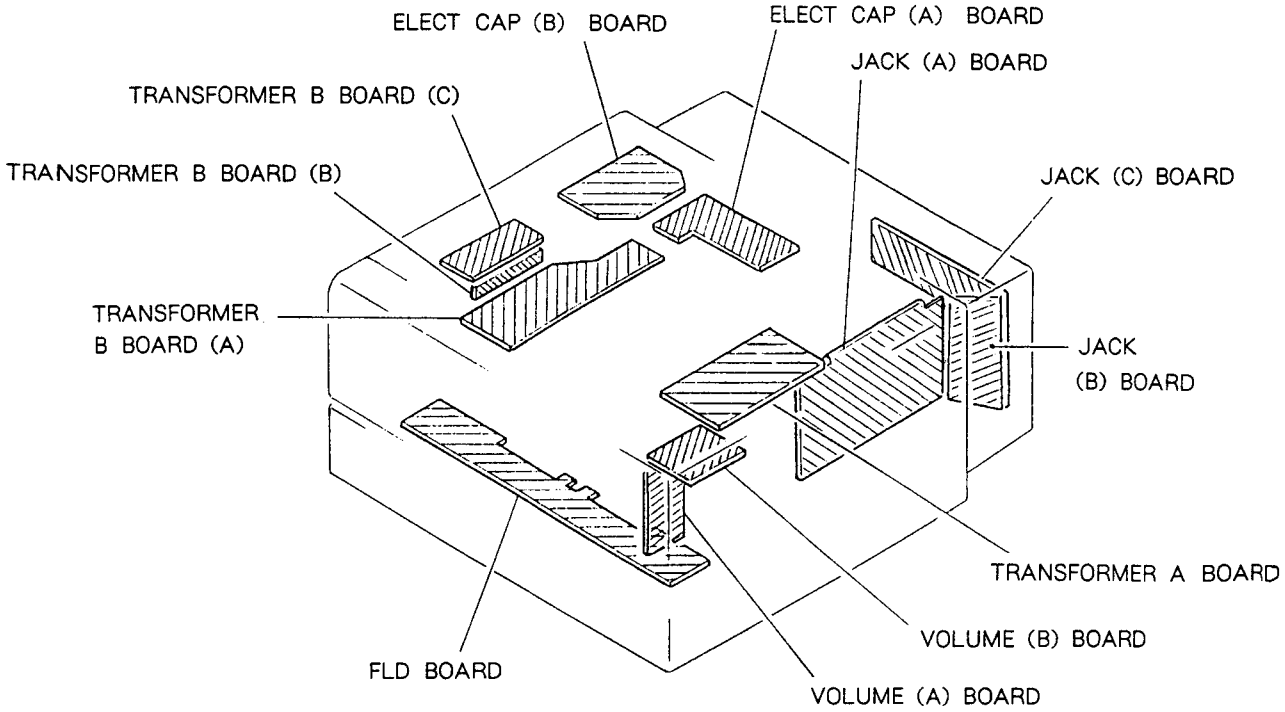

2-3. SEMICONDUCTOR LEAD LAYOUTS

LM393P

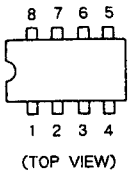

LM3875-2

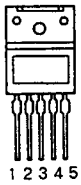

1 +IN
2 −IN
3 −VEE
4 OUT
5 VCC

DTC114ES
2SA1134
2SC2603-EF

RBV-602-01

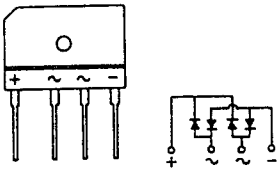

LC7822

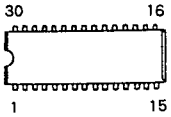

MSC7162

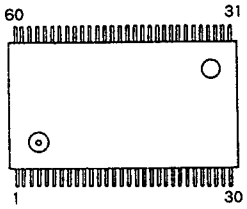

2SB1094-L

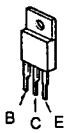

HZS30-2L
HZ12B2L
1SS120
1S1585

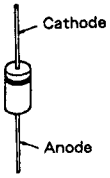

M51953BL

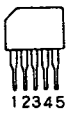

μPC1237HA
M5218AL
M5230L-A

SN75521
SN75531

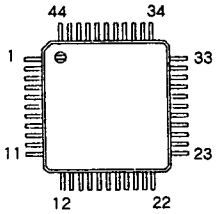

2SC3398
2SC3624A-15

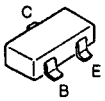

1SS226

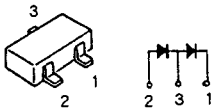

CXD1160AQ

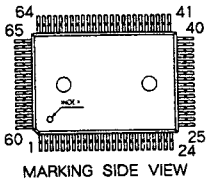

2SC1841-PAFAEA

2SA1175-HFE

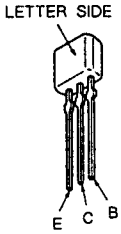

SEL2410E-D

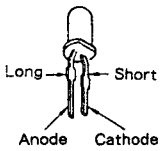

GP1F34R
GP1F34T

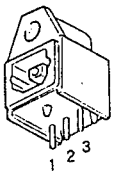

	34R	34T
1	VCC	IN
2	GND	VCC
3	OUT	GND

2SB1013-4
2SD1387-3
2SD1616A-K

HZS6B1L
HZS7B2L
HZS11B3L
1SS120
11ES2

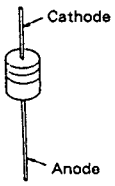

2-4. IC BLOCK DIAGRAMS

IC331 CXD2561

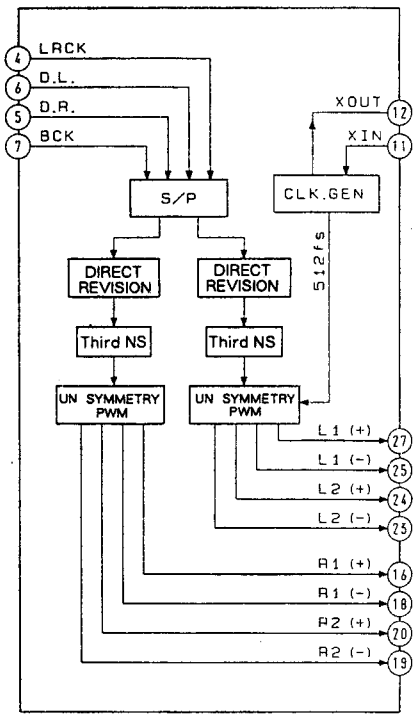

IC332 CXD2560M

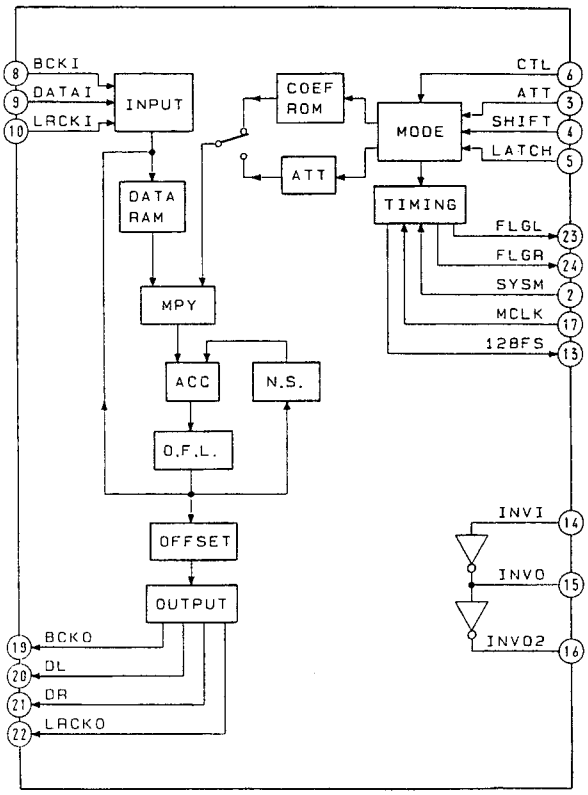

IC3, IC121 TL082M
IC113-120 M5218AFP

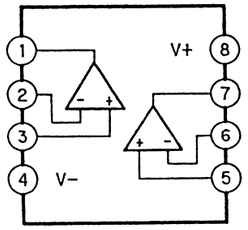

IC392 TC5081AP

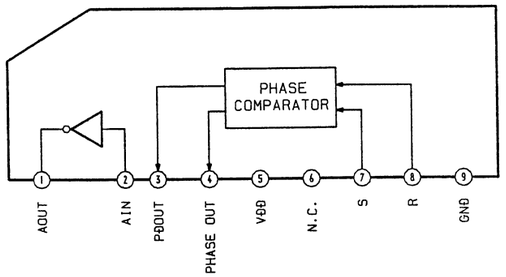

IC101 M5283P

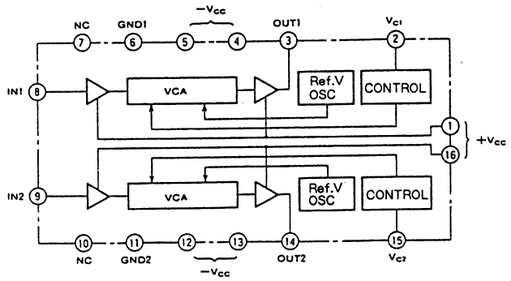

IC108 CXD2557M

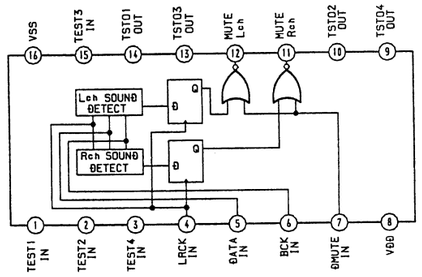

IC112 CXD1160AQ

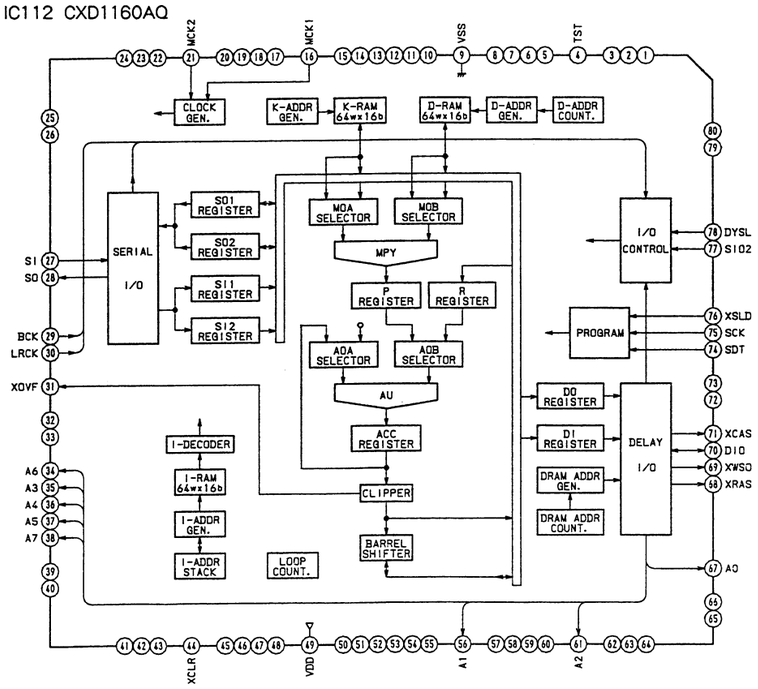

IC501, 504 MSC7162

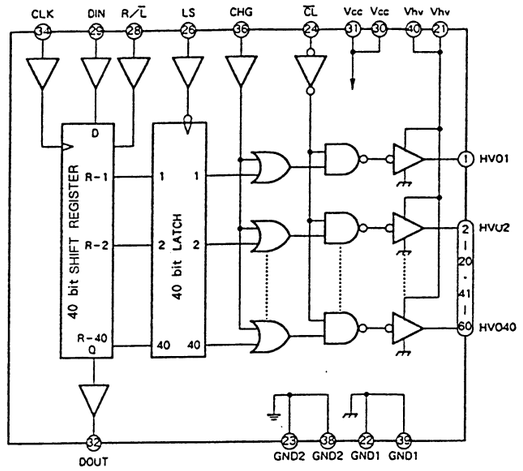

IC701 μ PC1237HA

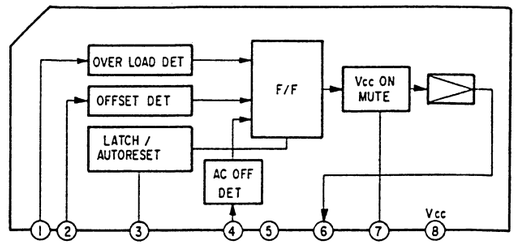

IC901 M5230L

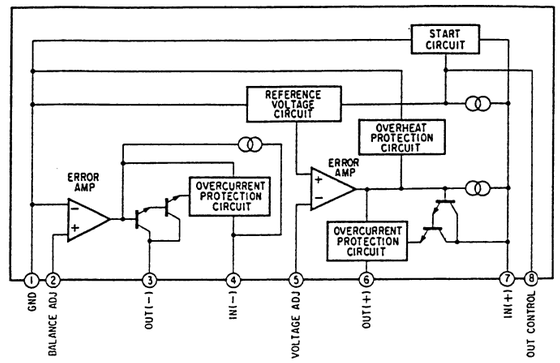

IC507 M51953BL

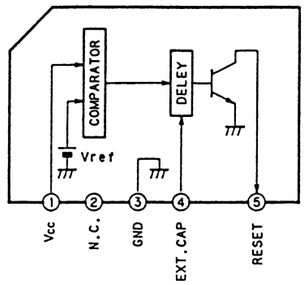

IC106 CXD8245M

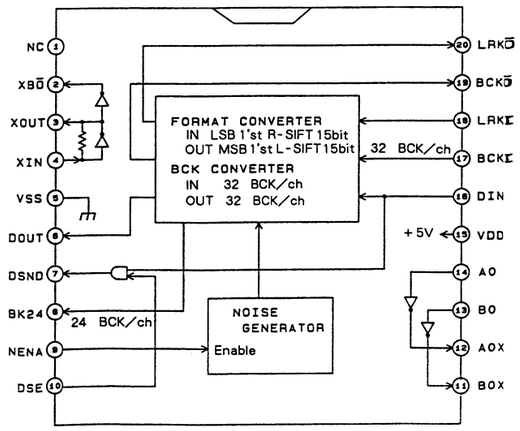

IC651 M5218AL

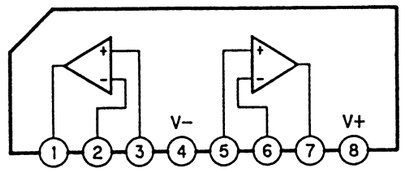

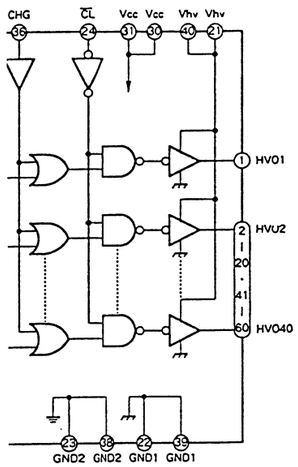

IC701 μ PC1237HA

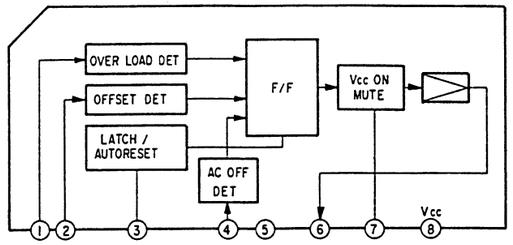

IC901 M5230L

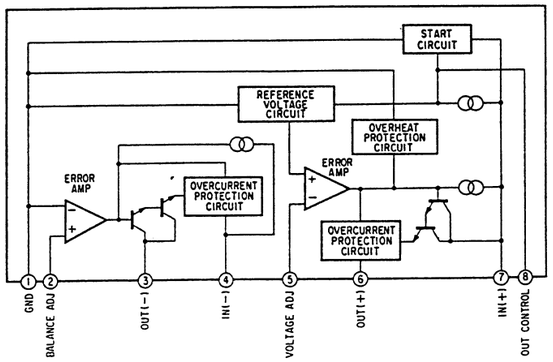

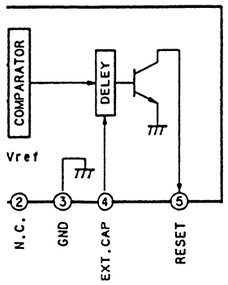

IC106 CXD8245M

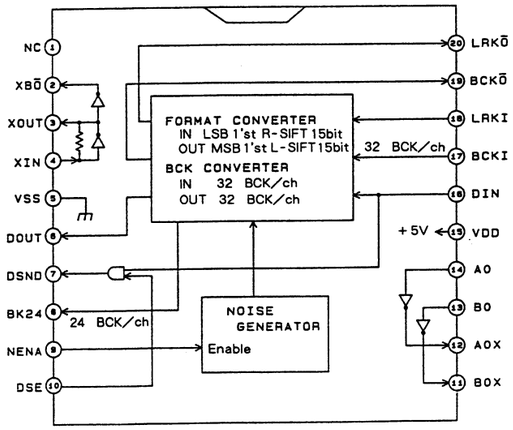

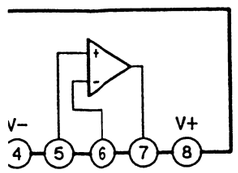

2-5. BLOCK DIAGRAM

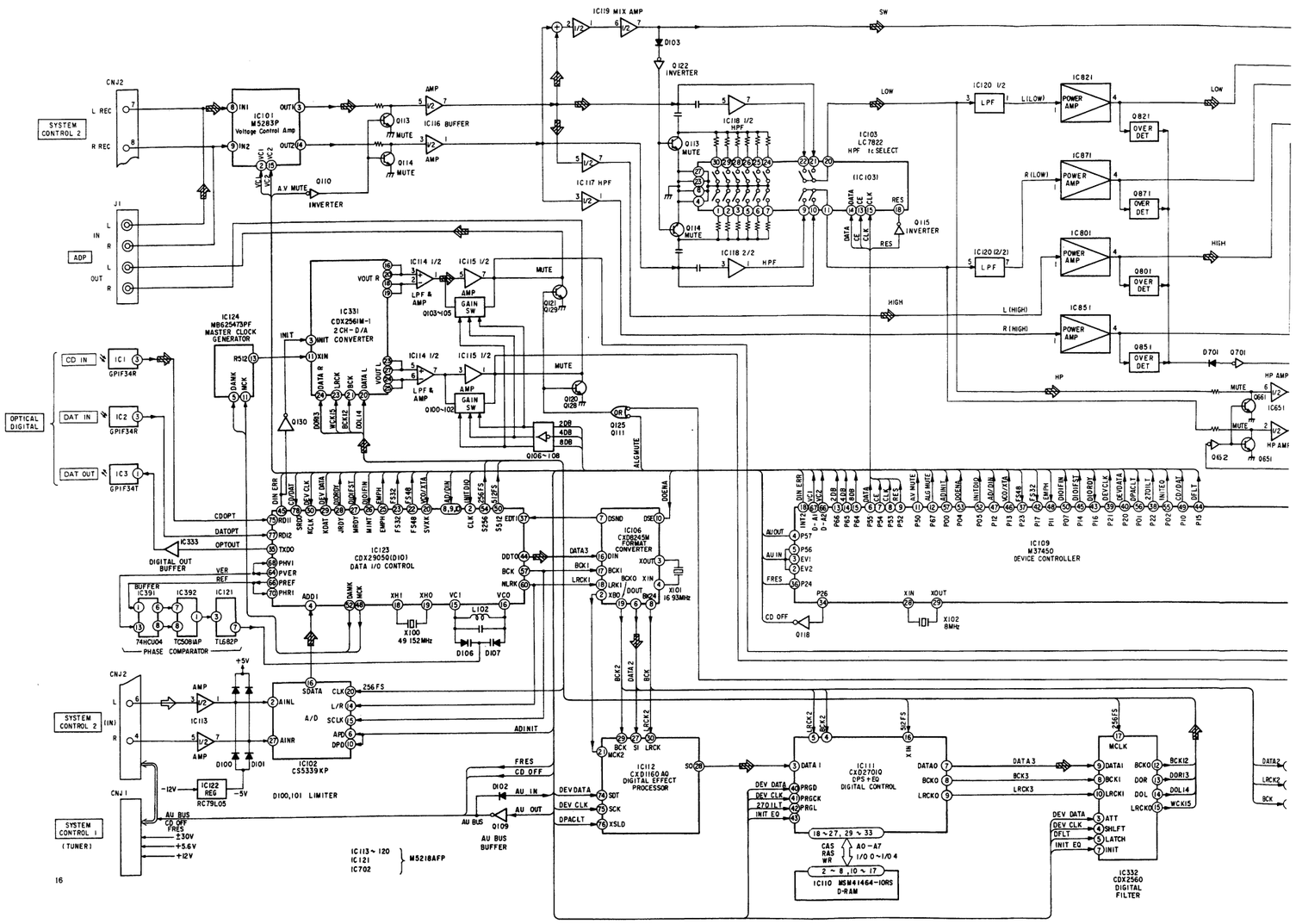

SONY-04779 / Druck 4

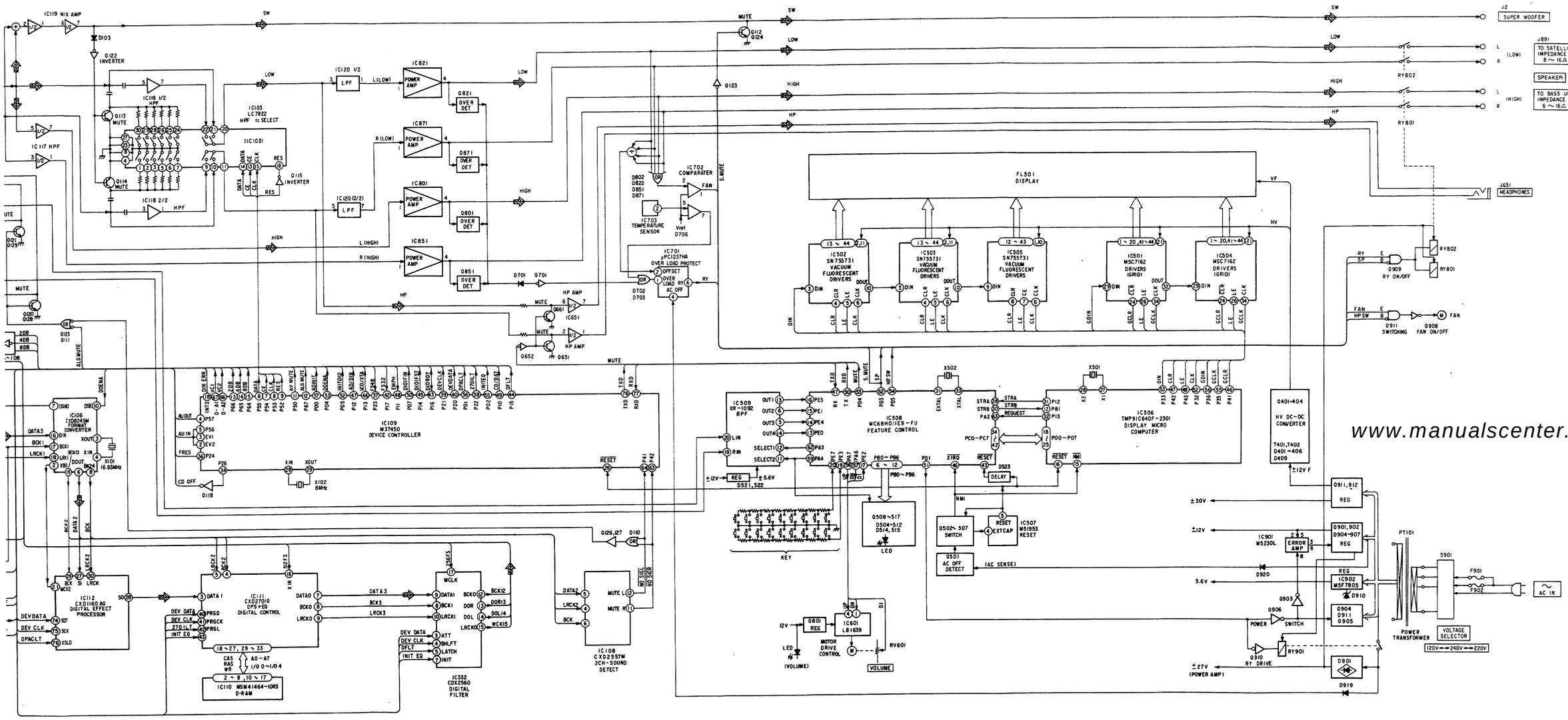

SONY-04779 / Druck 5

2-6. PRINTED WIRING BOARDS — JACK, POWER SUPPLY SECTION —

• See page 16 to 17 for Circuit Boards Location and Semiconductor Lead Layouts.

• Semiconductor Location

Ref. No.	Location	Ref. No.	Location
D401	J-3	Q403	J-4
D402	J-3	Q404	J-4
D403	J-3	Q651	D-31
D404	J-4	Q652	D-31
D405	J-4	Q661	D-31
D406	J-6	Q701	H-22
D409	J-7	Q801	I-20
D701	H-22	Q821	J-19
D702	H-22	Q851	I-23
D703	H-23	Q871	J-24
D704	I-21	Q901	E-30
D705	I-22	Q902	E-29
D706	I-22	Q903	D-30
D801	J-21	Q904	B-30
D802	I-21	Q905	B-31
D821	J-20	Q906	C-31
D822	I-20	Q907	G-7
D851	J-22	Q908	B-27
D852	I-21	Q909	C-25
D871	J-23	Q910	C-28
D872	I-20	Q911	H-20
D891	D-24	Q911	B-26
D892	C-24	Q912	G-10
D901	C-26		
D902	C-28		
D903			
D904	B-29		
D905			
D906	C-28		
D907	C-28		
D908	B-29		
D909	B-29		
D910	B-31		
D911	B-31		
D912	G-8		
D913	G-8		
D914	G-8		
D915	H-8		
D916	H-8		
D917	H-7		
D918	H-7		
D919	B-25		
D920	B-31		
D921	H-11		
D922	H-11		
D923	G-11		
D924	G-11		
IC1	C-2		
IC2	E-2		
IC3	D-2		
IC651	C-31		
IC701	H-22		
IC702	J-22		
IC703	I-22		
IC801	K-21		
IC821	K-19		
IC851	K-22		
IC871	K-24		
IC901	D-29		
IC902	B-31		
Q401	J-9		
Q402	J-10		

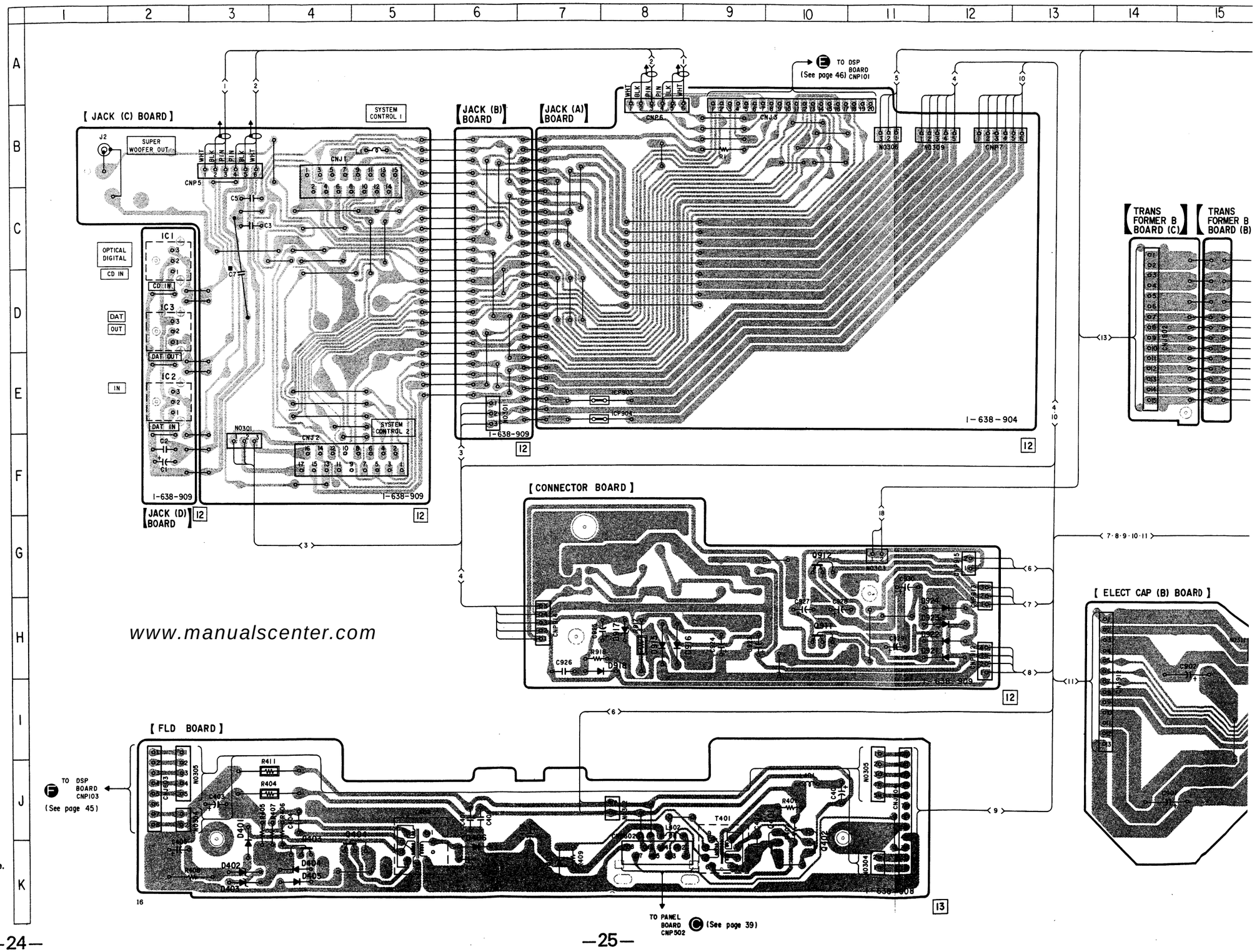

Note on Mounting Diagram :

● o—— : Parts extracted from the component side.

SONY-04779 / Druck 6

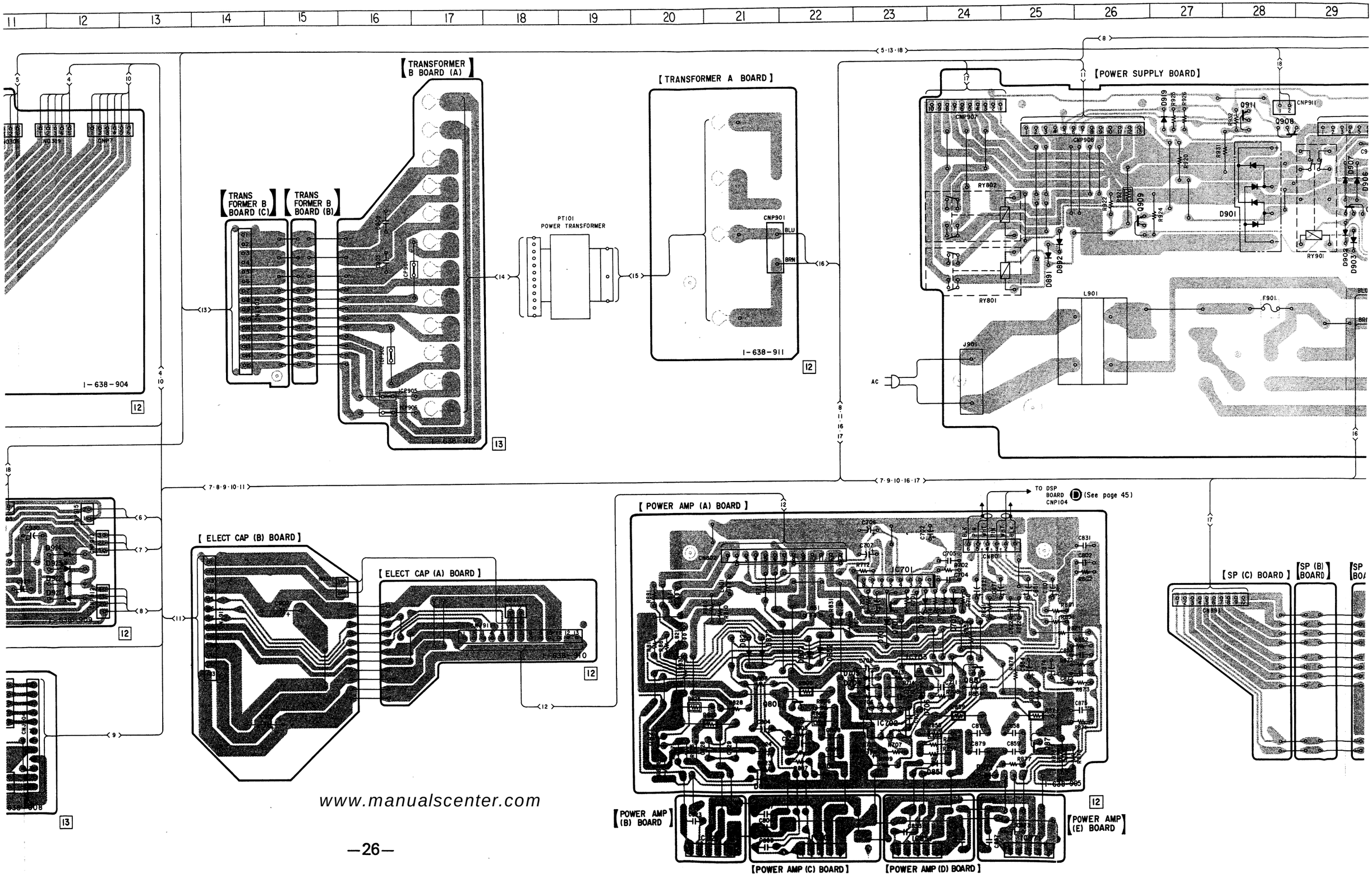

SONY-04779 / Druck 7

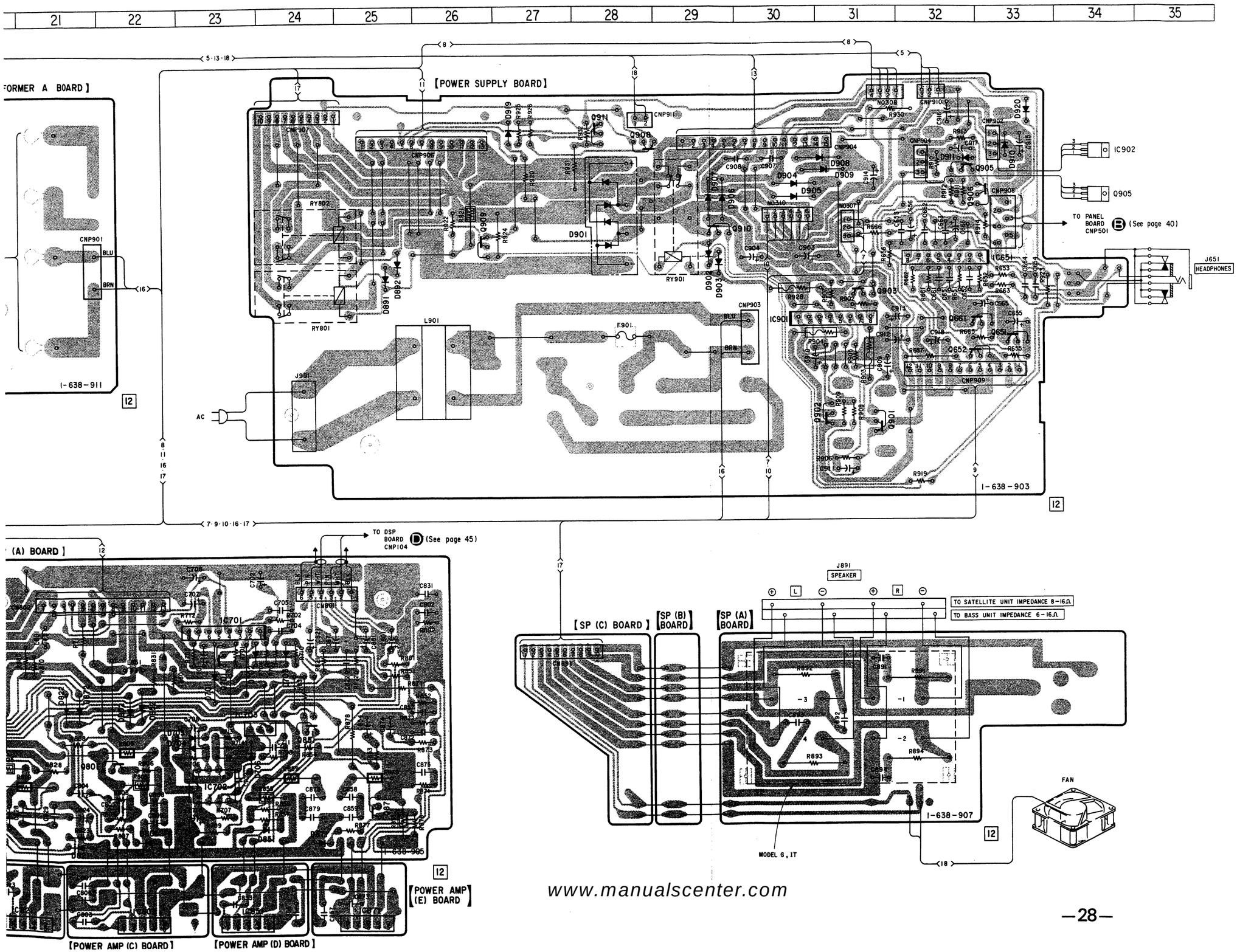

SONY-04779 / Druck 8

2-7. SCHEMATIC DIAGRAM — JACK, POWER SUPPLY SECTION —

• See page 9 to 15 for

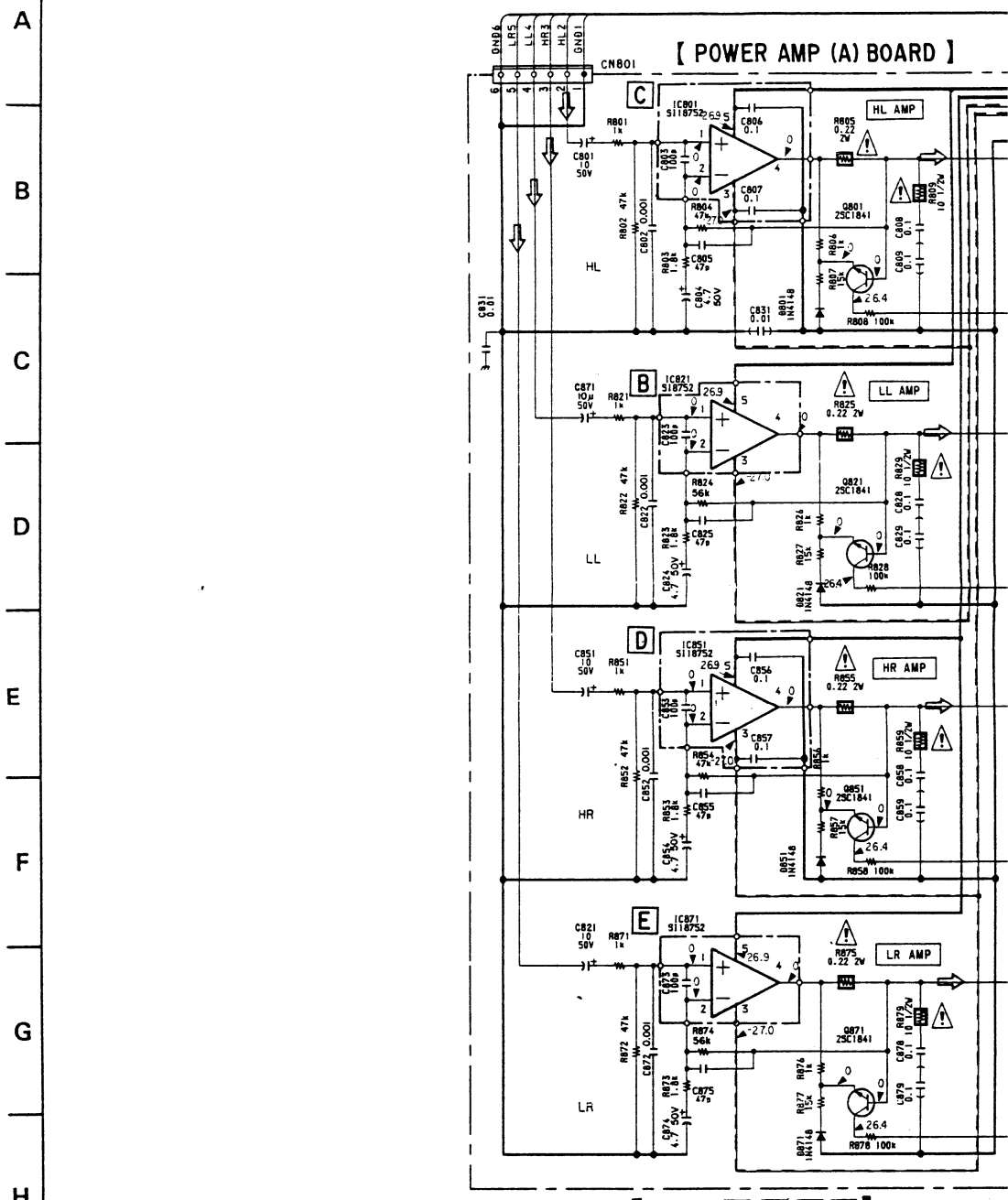

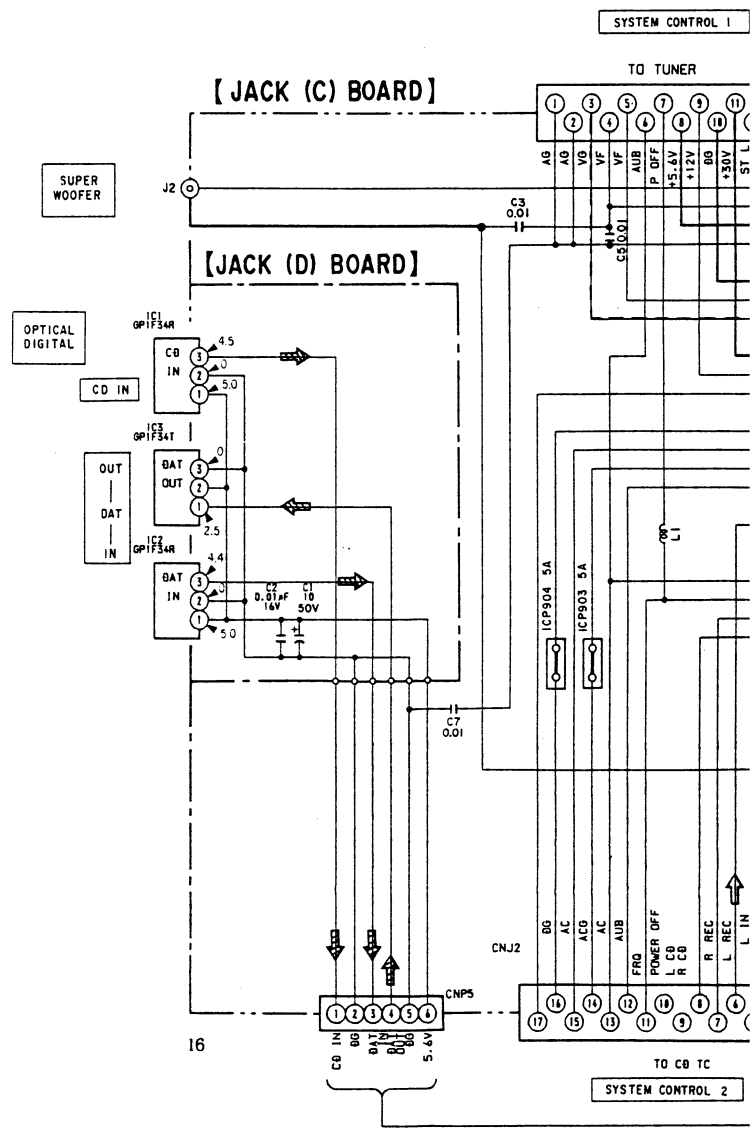

Note on Schematic Diagram :

- All capacitors are in μF unless otherwise noted. pF: μμF 50WV or less are not indicated except for electrolytics and tantalums.
- All resistors are in Ω and ¼ W or less unless otherwise specified.
- : nonflammable resistor.
- : fusible resistor.

The components identified by mark ⚠ or dotted line with mark ⚠ are critical for safety.
Replace only with part number specified.

- : B + Line.
- : B − Line.
- Voltage and waveforms are dc with respect to ground under no-signal conditions.
  no mark : CD, VIDEO 1
- Voltages are taken with a VOM (input impedance 10 MΩ).
- Waveforms are taken with a oscilloscope.
- Circled numbers refer to waveforms.
- Signal path.
  : sound signal
  : CD
  : digital out

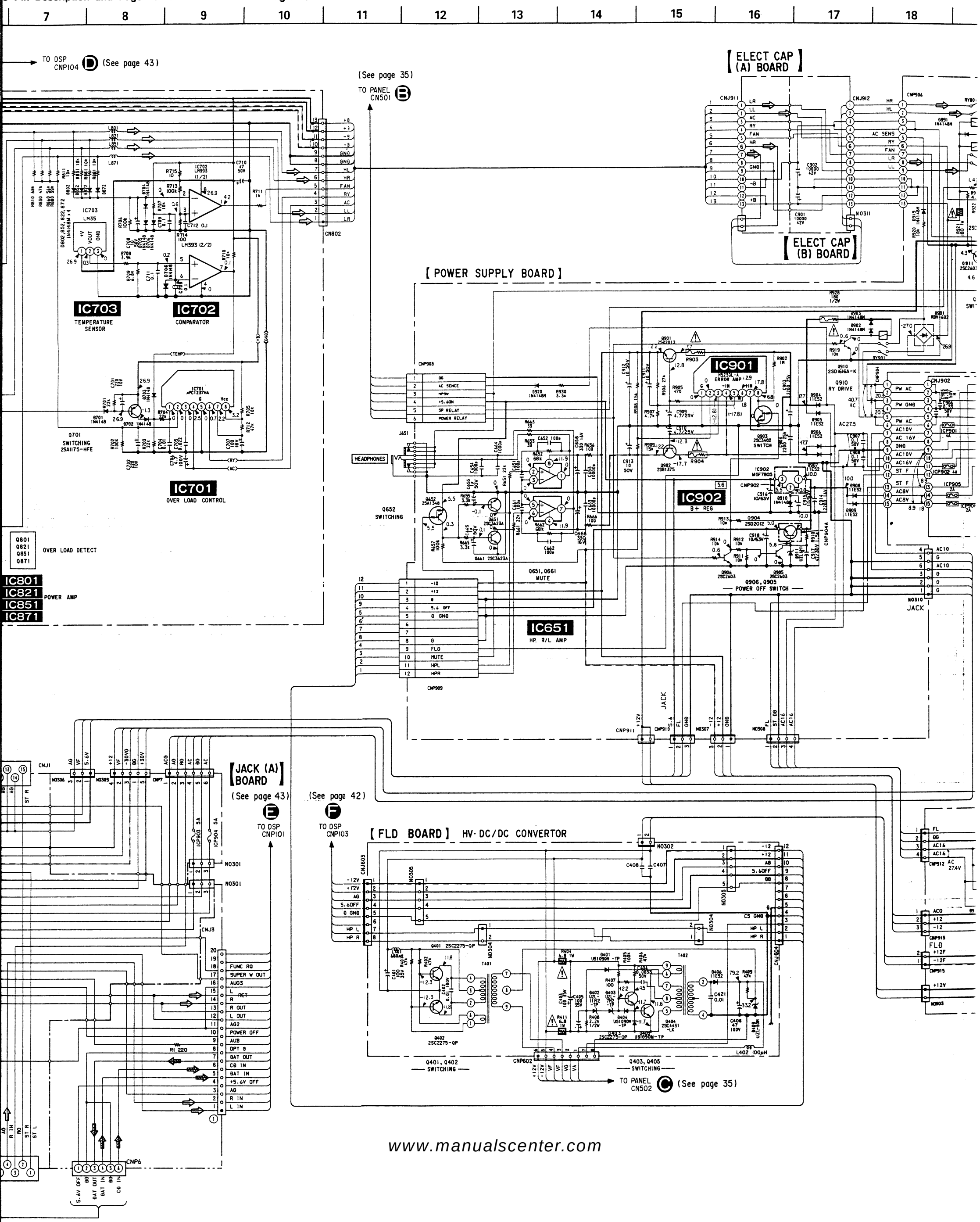

SUPPLY SECTION — • See page 9 to 15 for IC Pin Description and Page 18 to 20 for IC Block Diagrams.

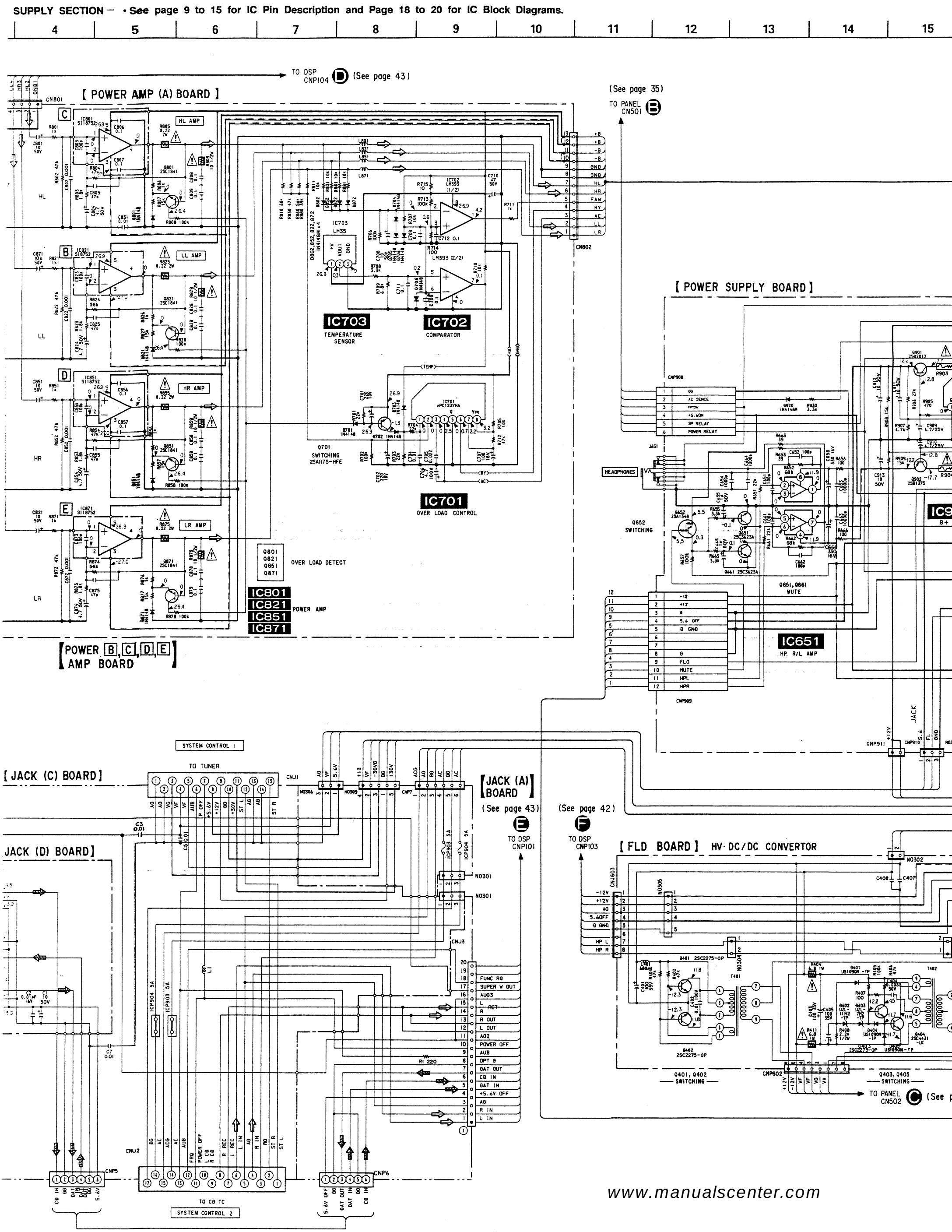

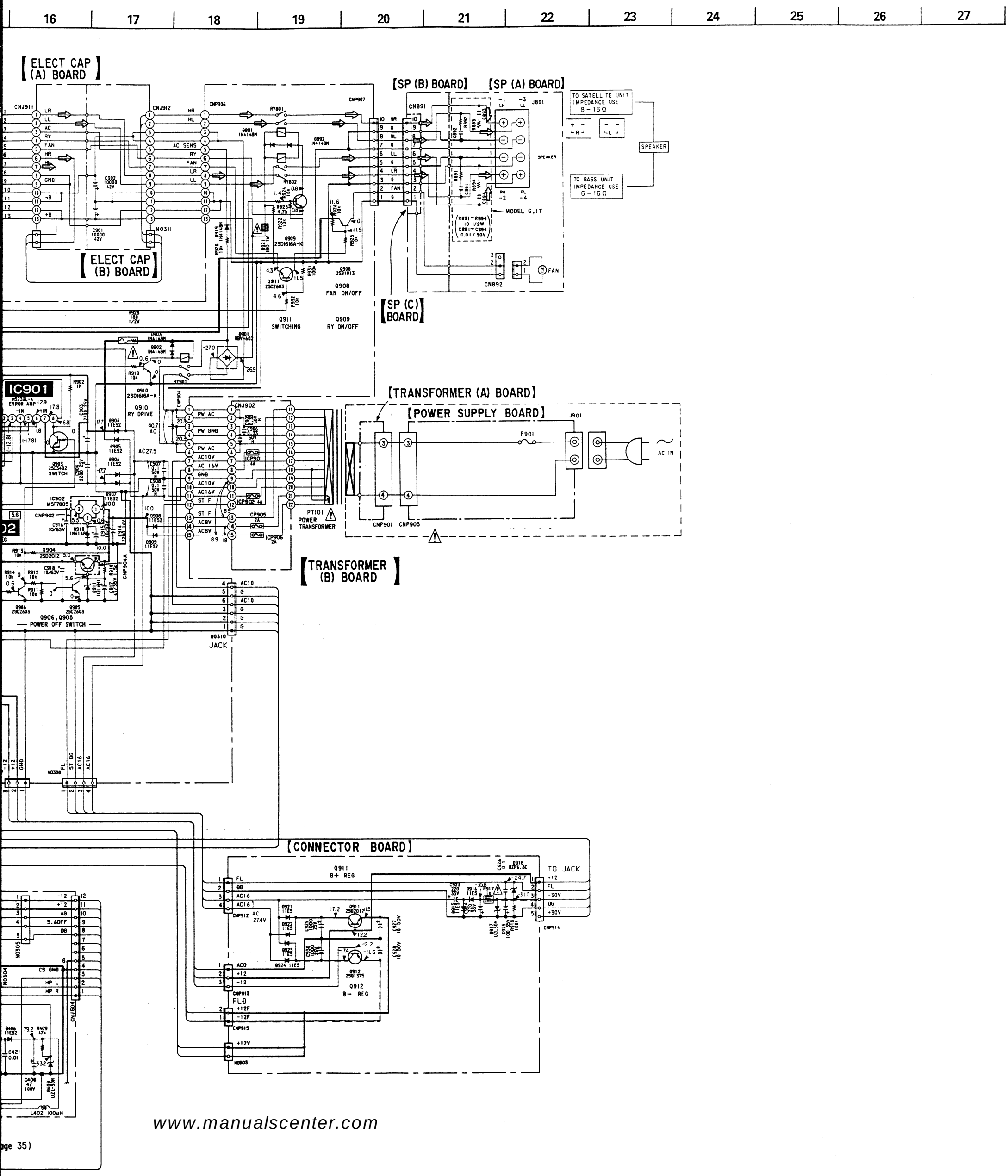

2-8. SCHEMATIC DIAGRAM — PANEL SECTION —

• See page 9 to 15 for IC Pin Description and Page 18 to 20 for IC Block Diagrams. See page 29 S

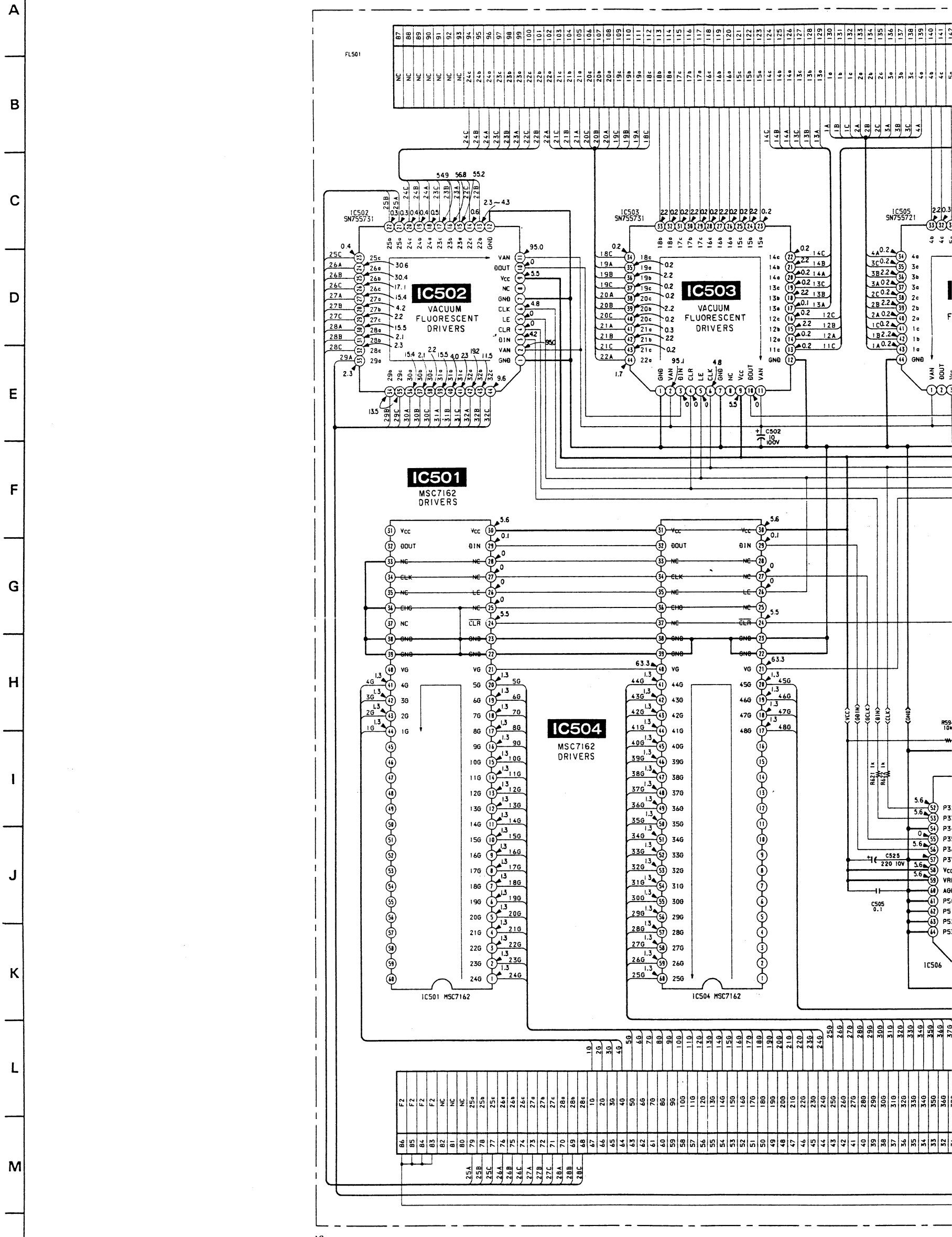

16

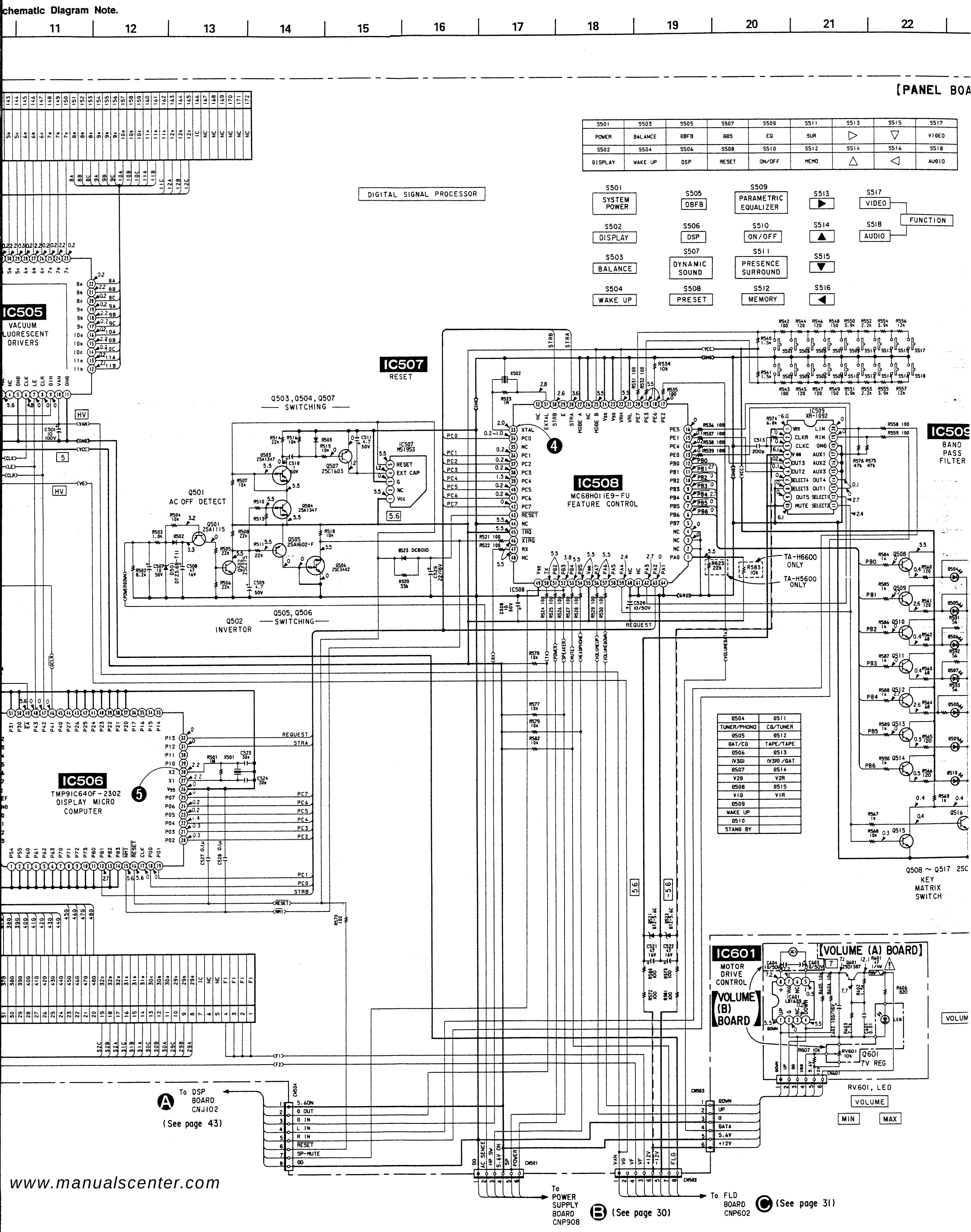

S501	S503	S505	S507	S509	S511	S513	S515	S517
POWER	BALANCE	DBFB	DDS	EQ	SUR	▷	▽	VIDEO
S502	S504	S506	S508	S510	S512	S514	S516	S518
DISPLAY	WAKE UP	DSP	RESET	ON/OFF	MEMO	△	◁	AUDIO

S501 SYSTEM POWER	S505 DBFB	S509 PARAMETRIC EQUALIZER	S513 ▶	S517 VIDEO
S502 DISPLAY	S506 DSP	S510 ON/OFF	S514 ▲	S518 AUDIO
S503 BALANCE	S507 DYNAMIC SOUND	S511 PRESENCE SURROUND	S515 ▼	FUNCTION
S504 WAKE UP	S508 PRESET	S512 MEMORY	S516 ◀	

DSP	DSP
TUNER/PHONO	CD/TUNER
DSP	DSP
DAT/CD	TAPE/TAPE
DSP	DSP
(V3G)	(V3R) /DAT
DSP	DSP
V2G	V2R
DSP	DSP
V1G	V1R
DSP	
WAKE UP	
DSP	
STAND BY	

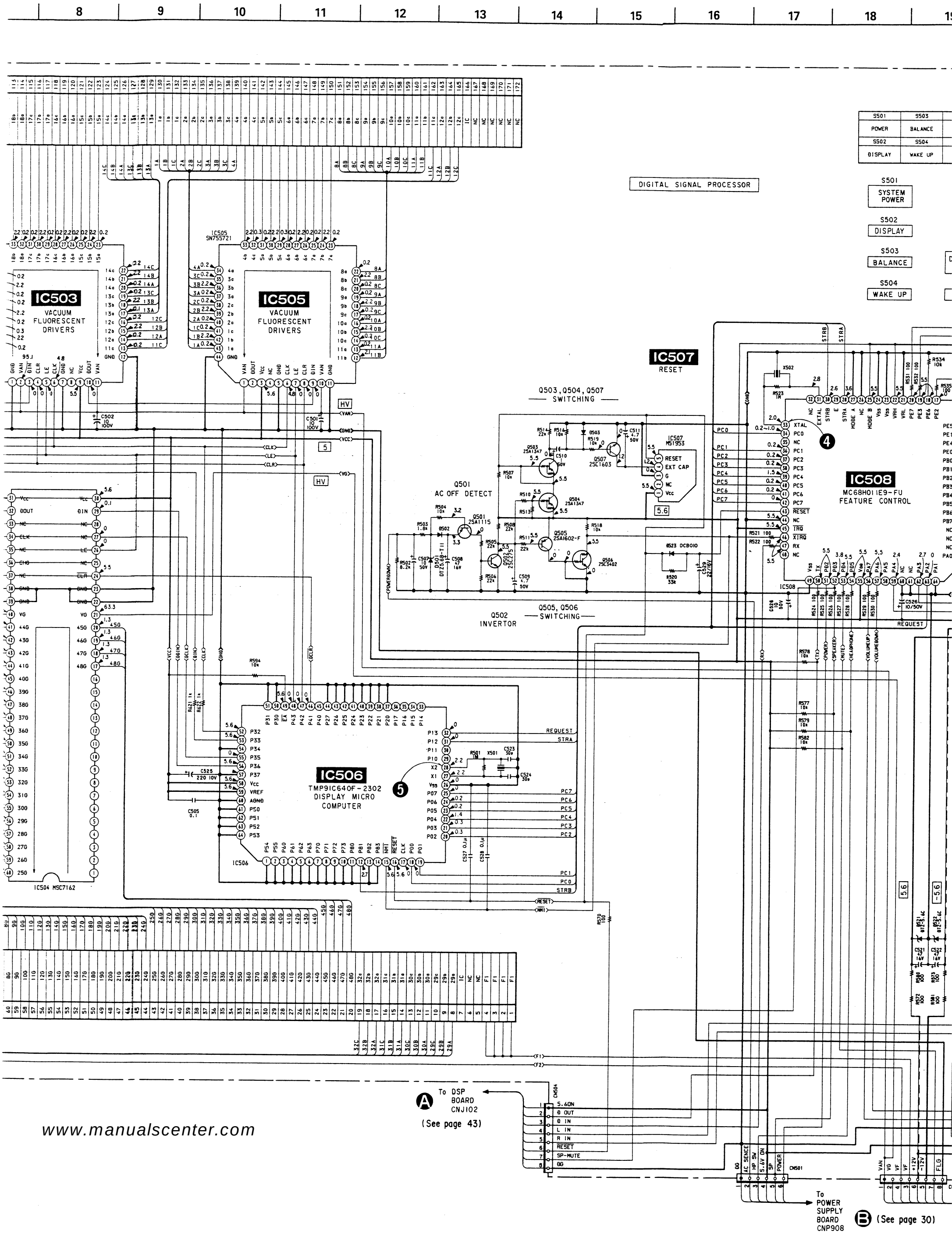

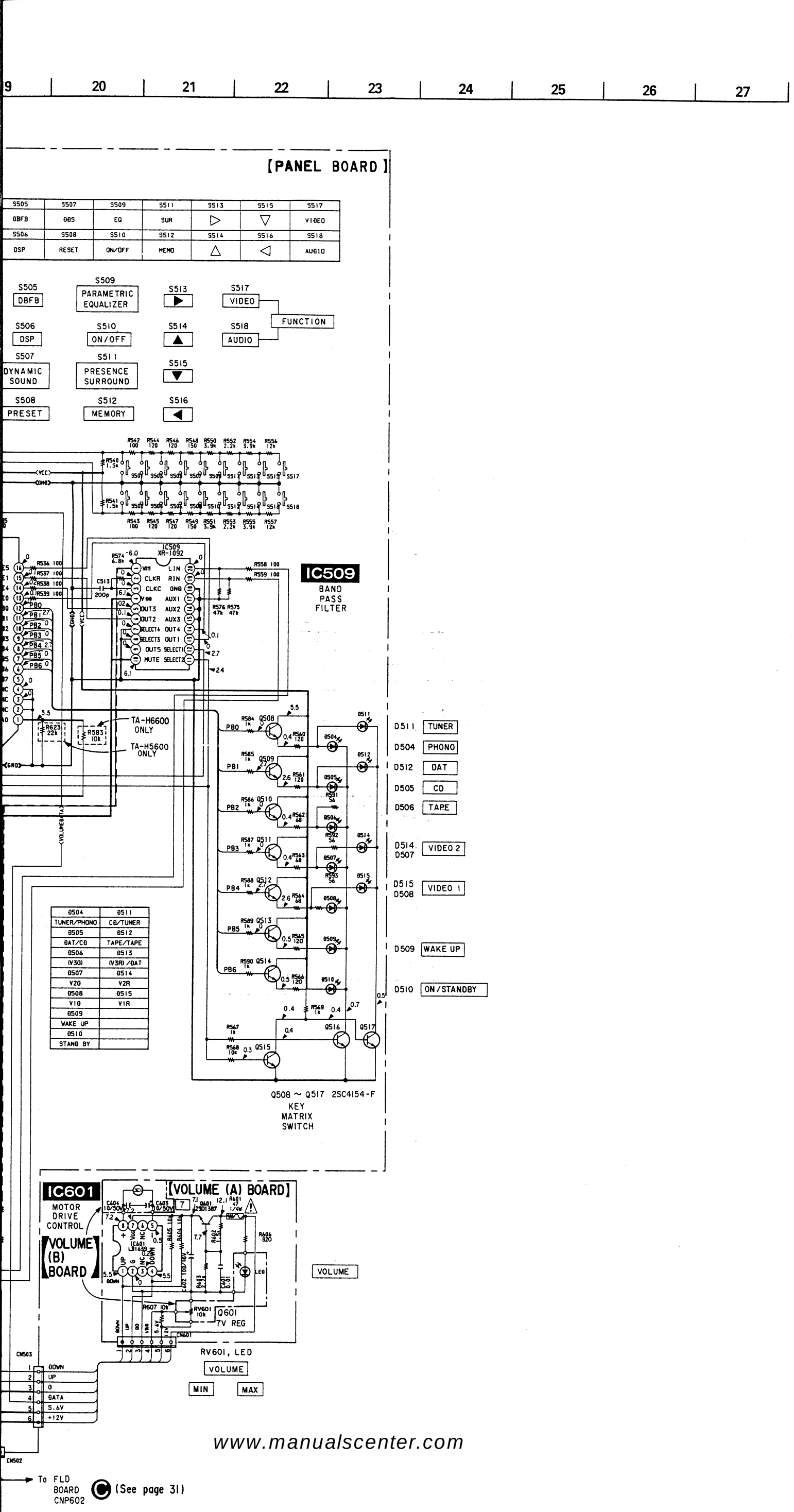

D504	D511
TUNER/PHONO	CD/TUNER
D505	D512
DAT/CD	TAPE/TAPE
D506	D513
(V3G)	(V3R) /DAT
D507	D514
V2G	V2R
D508	D515
V1G	V1R
D509	
WAKE UP	
D510	
STAND BY	

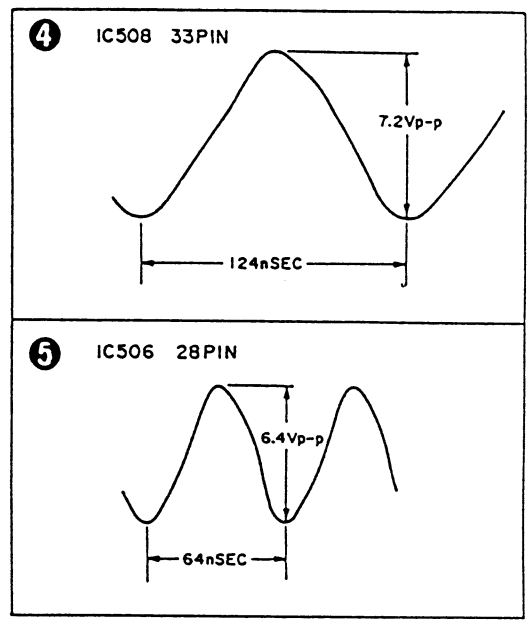

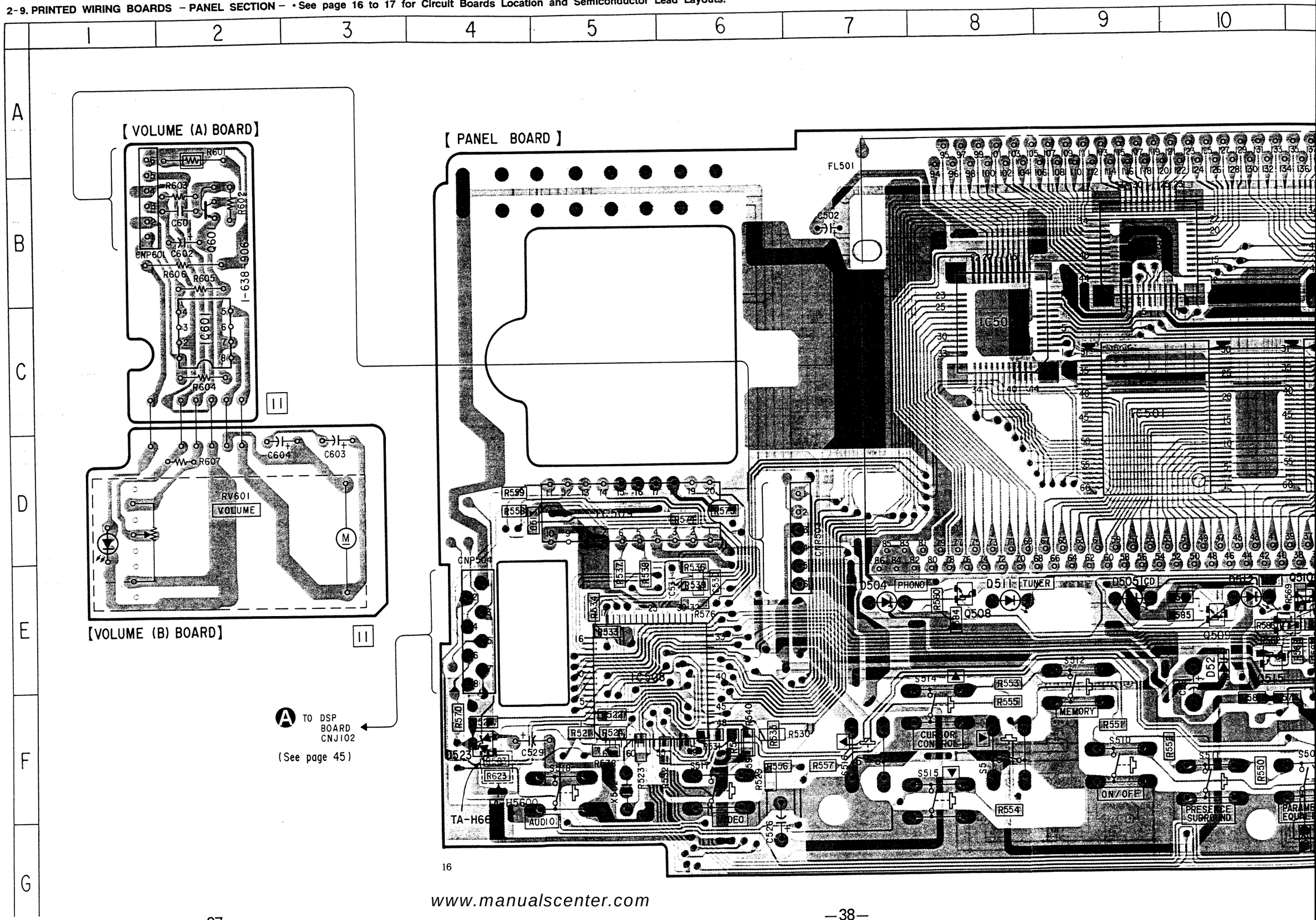

16

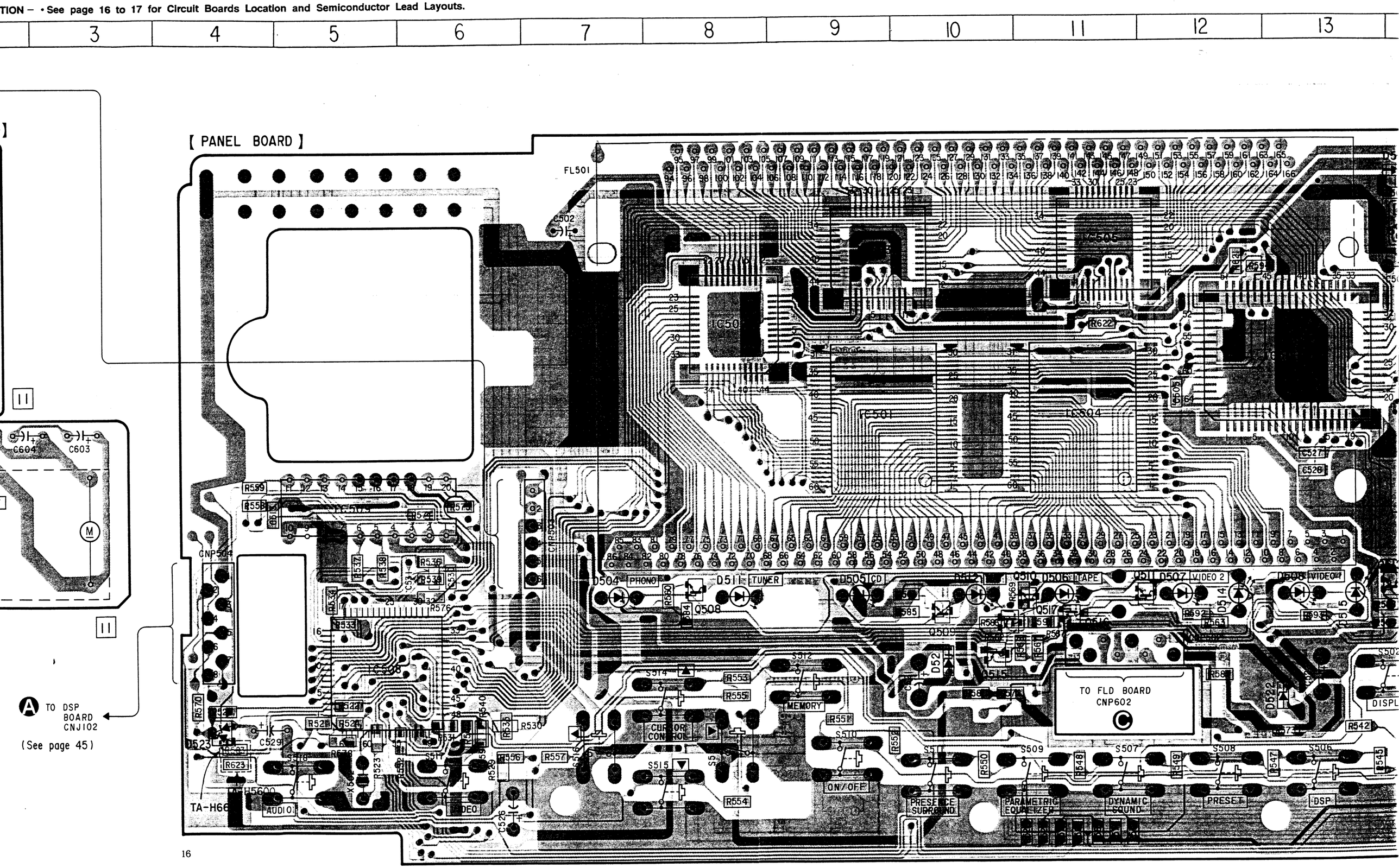

16

4 5 6 7 8 9 10 11 12 13 14

【 PANEL BOARD 】

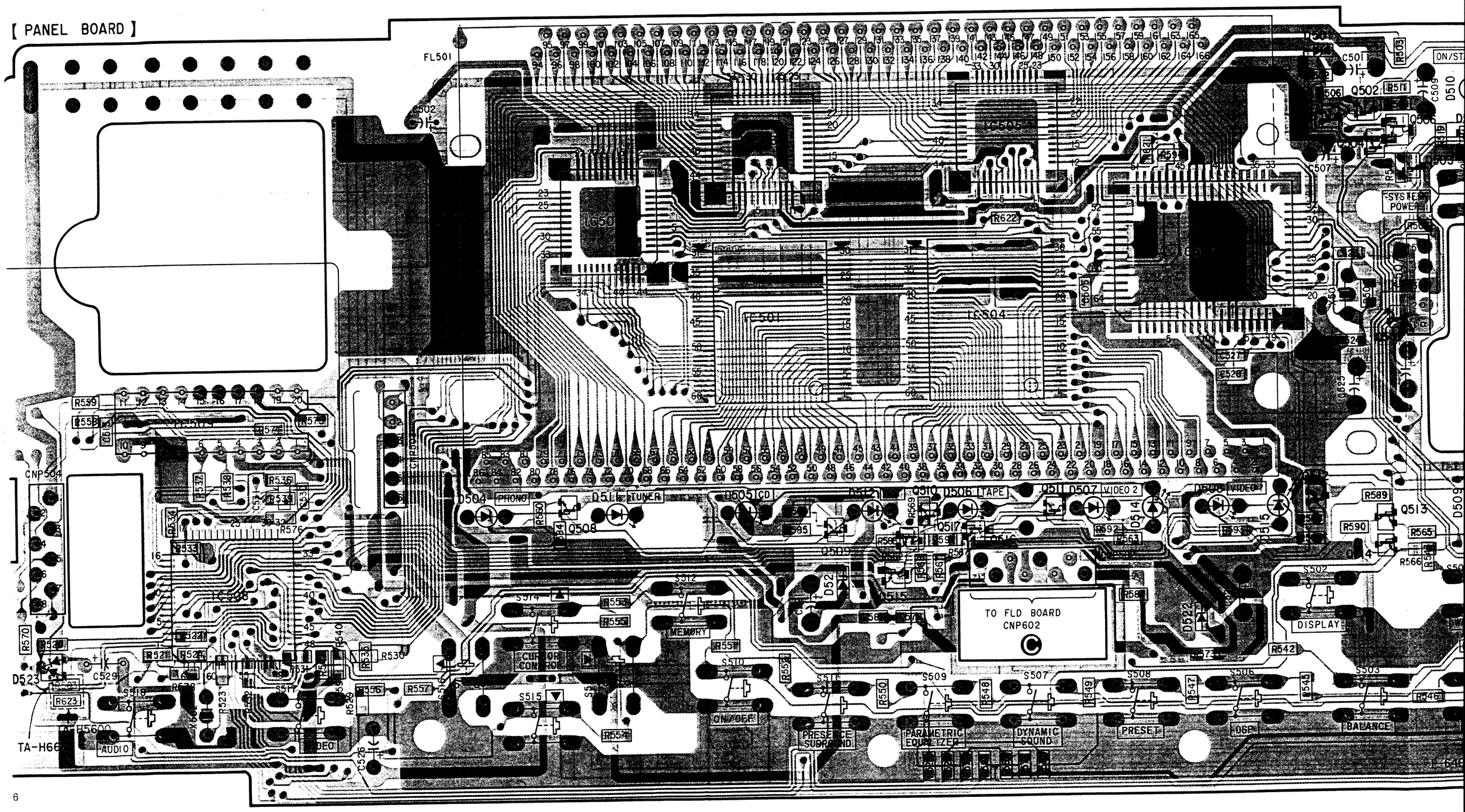

6

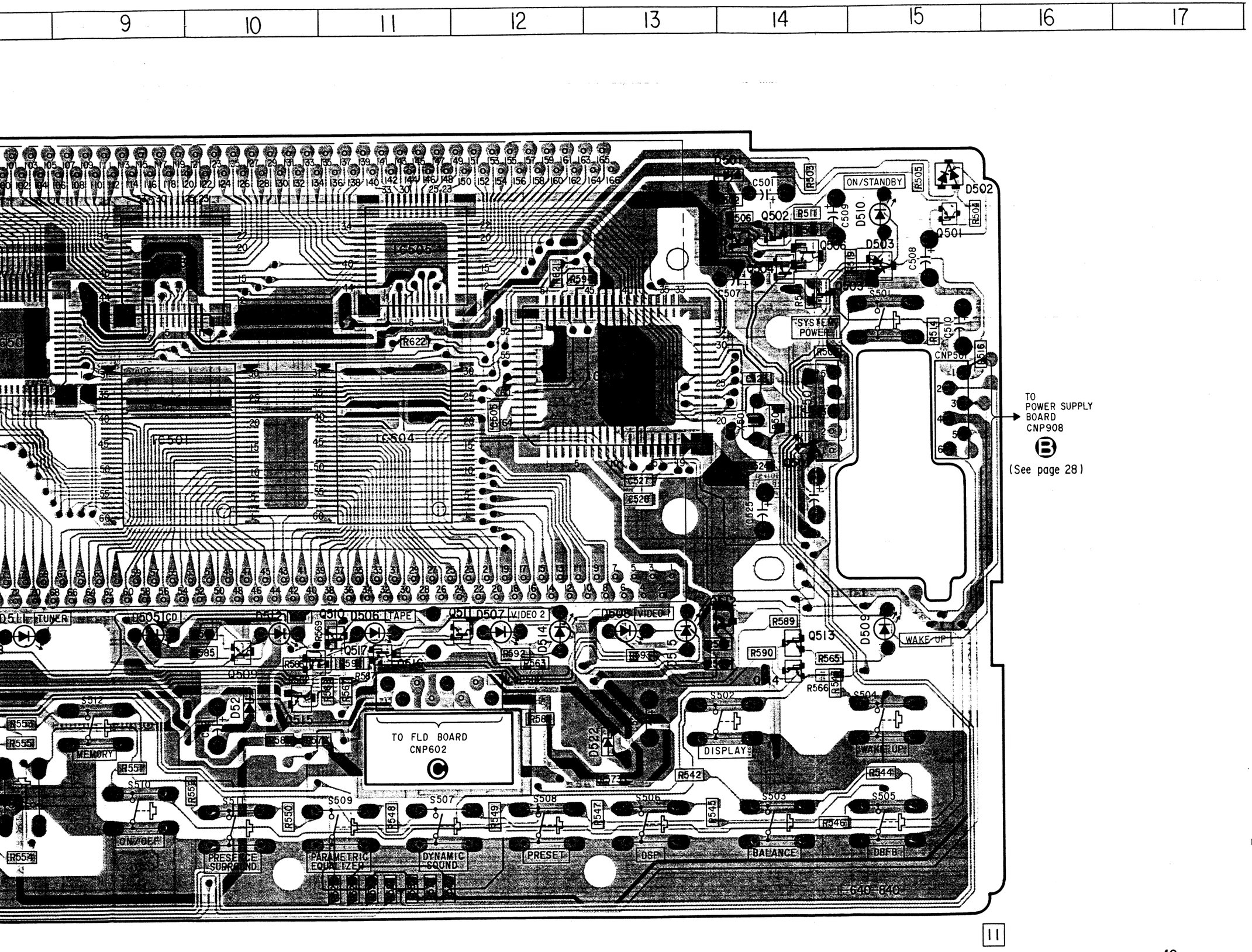

· Semiconductor Location

Ref. No.	Location
D501	B-14
D502	B-15
D503	B-15
D504	E-7
D505	E-9
D506	E-11
D507	E-12
D508	E-13
D509	E-15
D510	B-15
D511	E-18
D512	E-10
D513	E-11
D514	E-12
D515	E-13
D521	E-10
D522	F-13
D523	E-4
IC501	C-9
IC502	C-8
IC503	B-9
IC504	C-11
IC505	B-11
IC506	C-13
IC507	C-14
IC508	E-5
IC509	D-5
Q501	B-15
Q502	B-14
Q503	B-14
Q504	B-14
Q505	B-14
Q506	B-14
Q507	D-14
Q508	E-8
Q509	E-10
Q510	E-11
Q511	E-12
Q512	E-14
Q513	E-14
Q514	E-14
Q515	E-10
Q516	E-11
Q517	E-11

Note on Mounting Diagram :

- ○—— : Parts extracted from the component side.
- ⊡← : Indicates side identified with part number.
- ● : Through hole.
- ▬ : Pattern on the side which is seen.
- ▒ : Pattern of the rear side.

2-10. SCHEMATIC DIAGRAM — DSP SECTION — • See page 9 to 15 for IC Pin Description and Page 18 to 20 for IC Block Diagrams. See

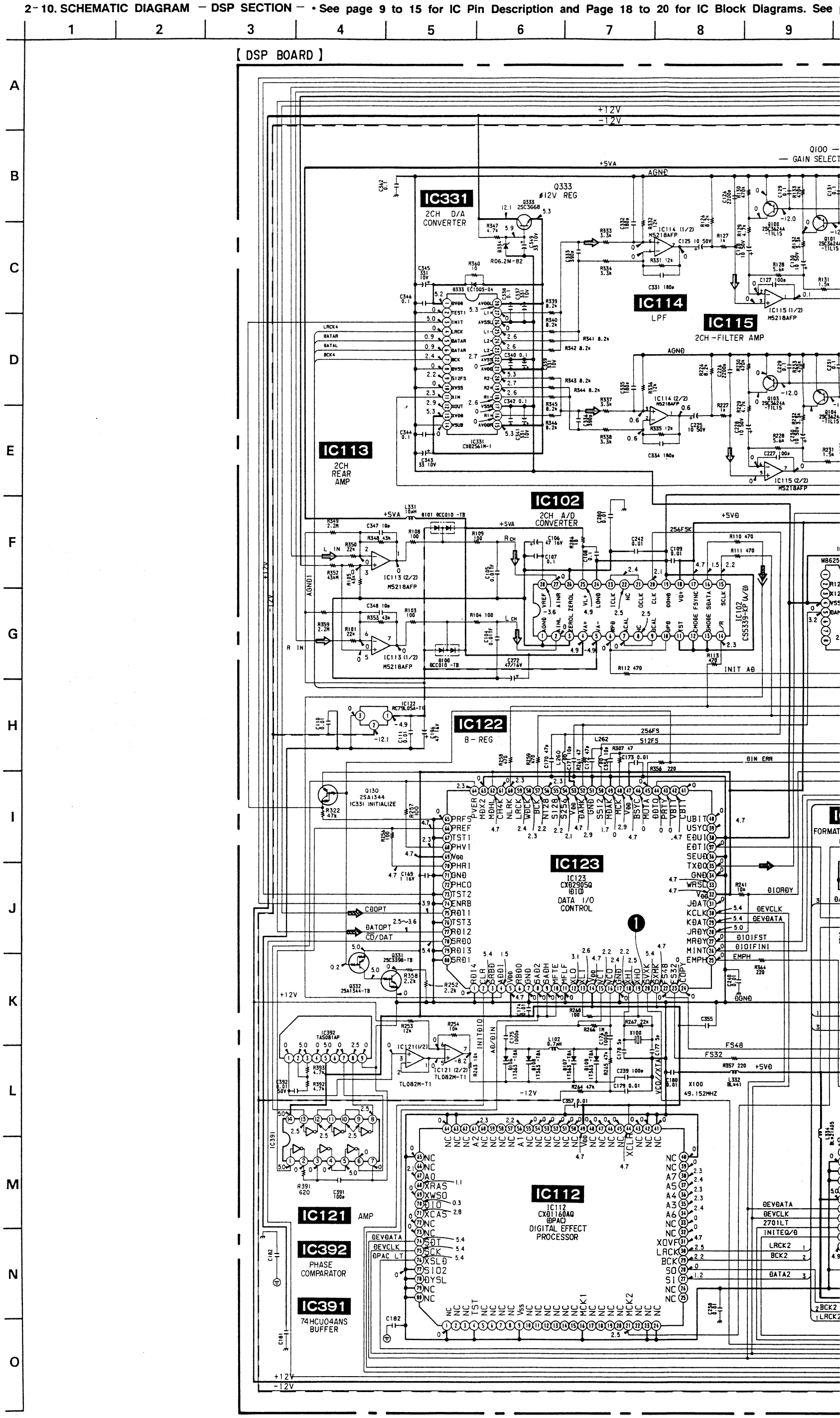

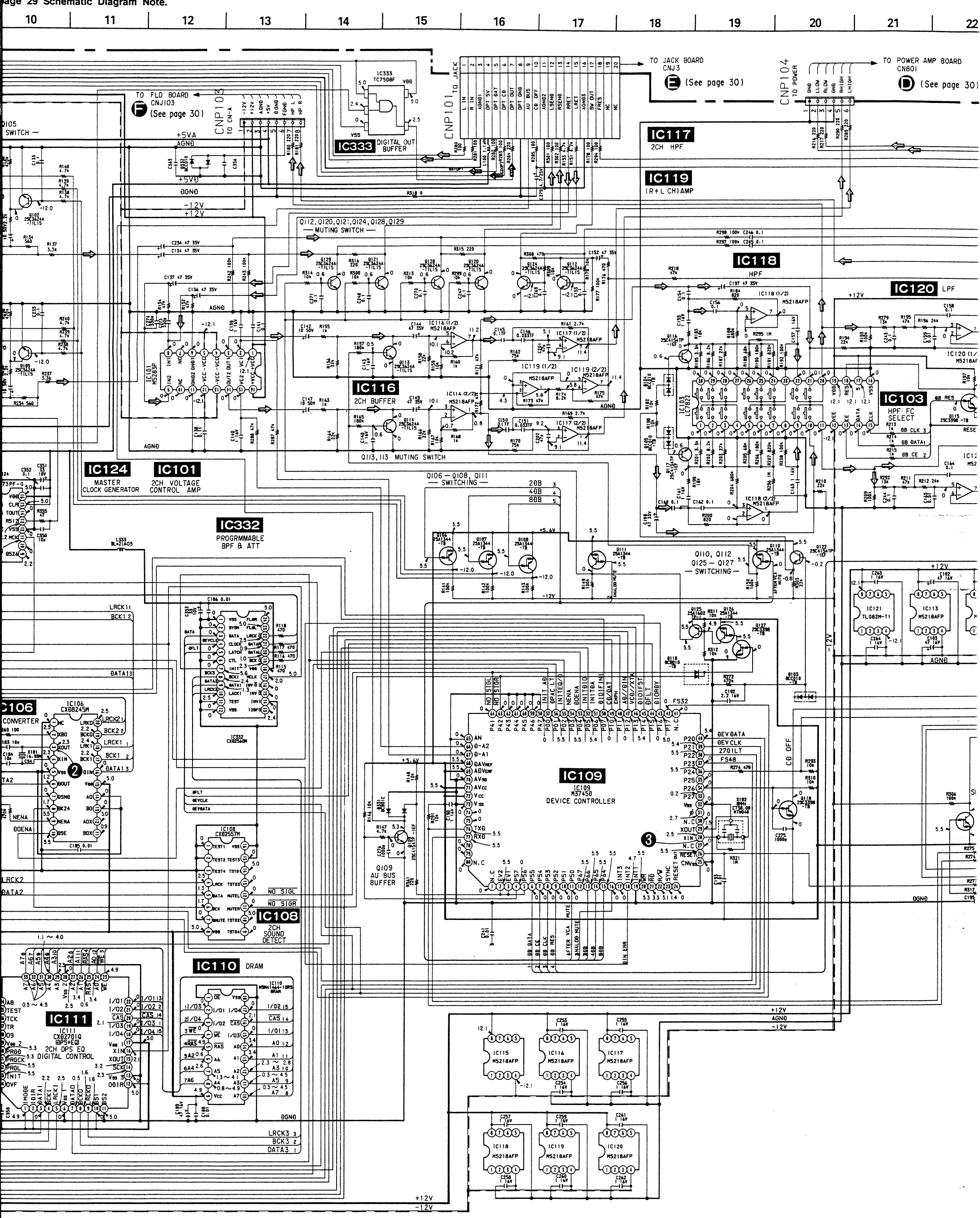

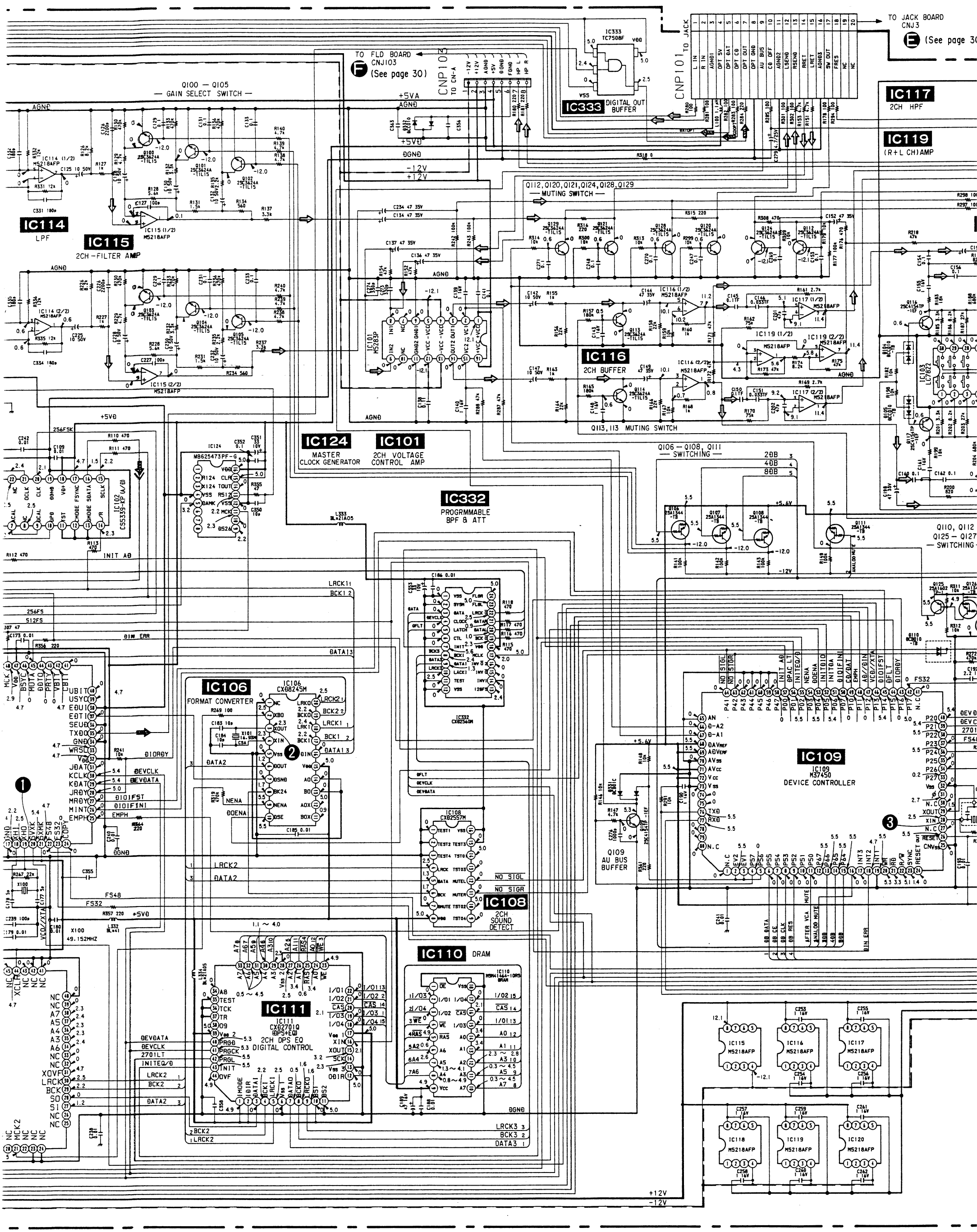

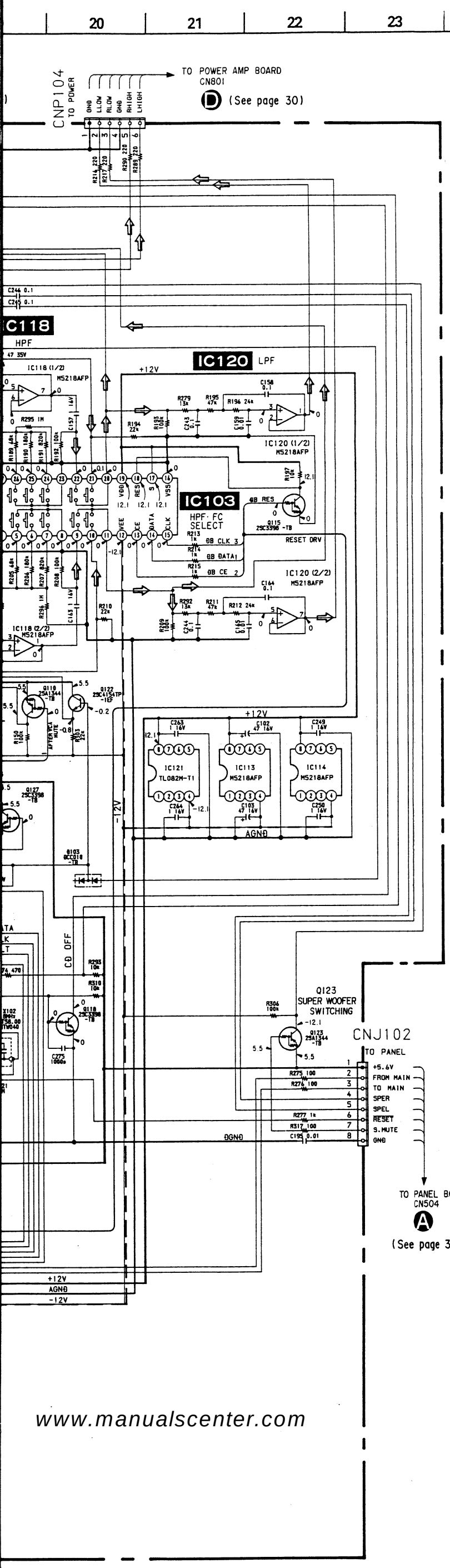

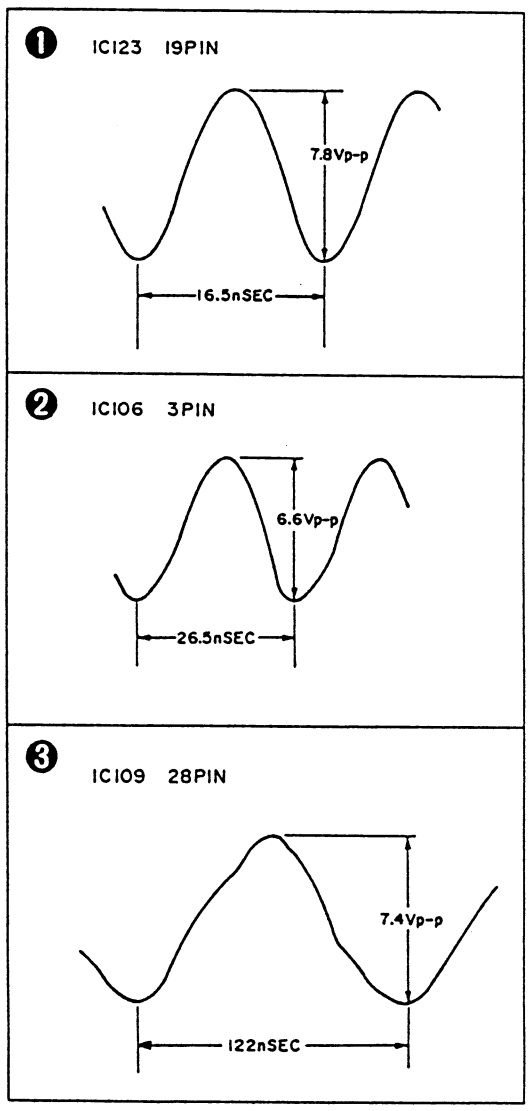

2-11. PRINTED WIRING BOARDS – DSP SECTION – • See page 16 to 17 for Circuit Boards Location and Semiconductor Lead Layouts.

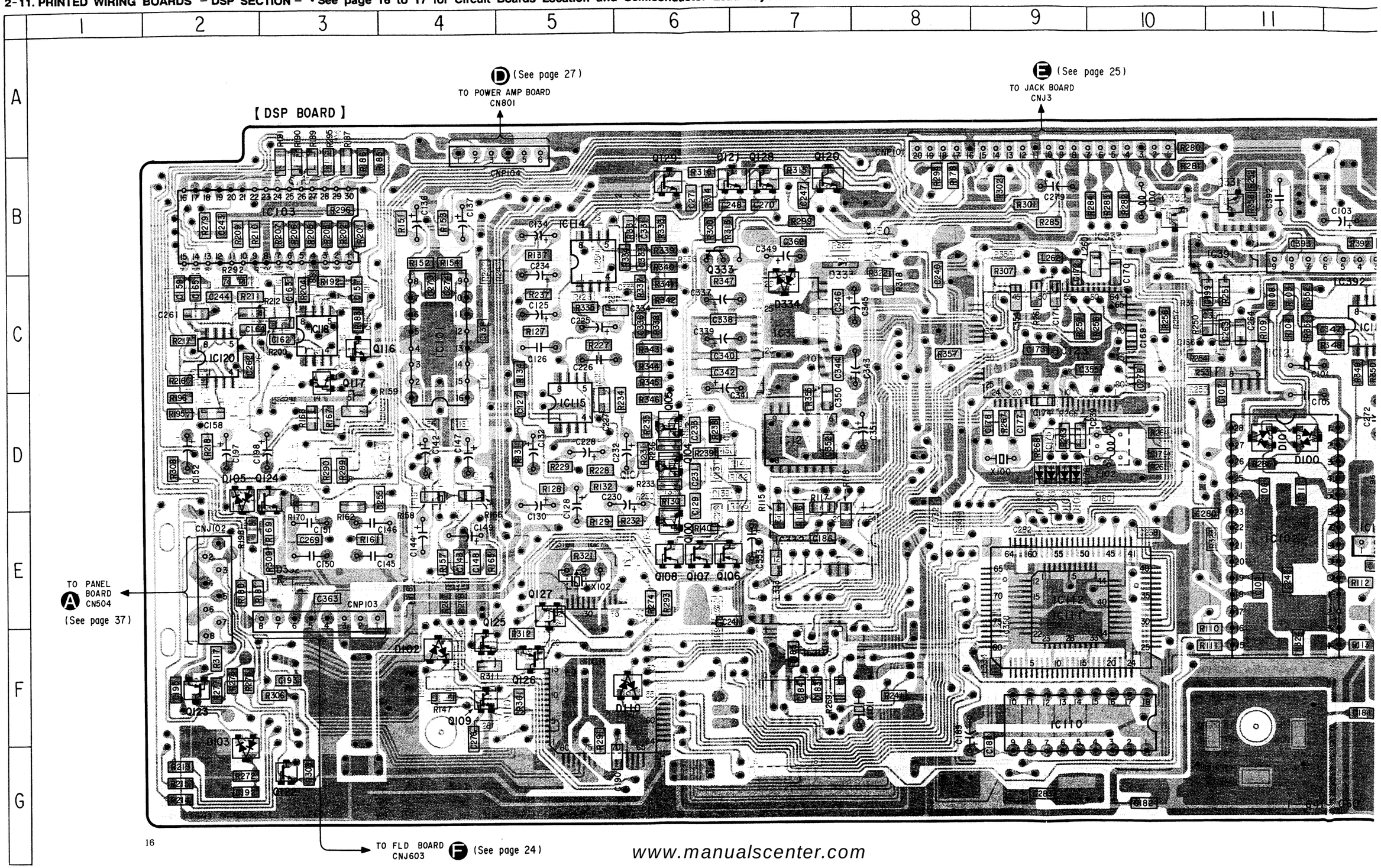

SONY-04779 / Druck 9

emiconductor Lead Layouts.

6	7	8	9	10	11	12	13	14	15

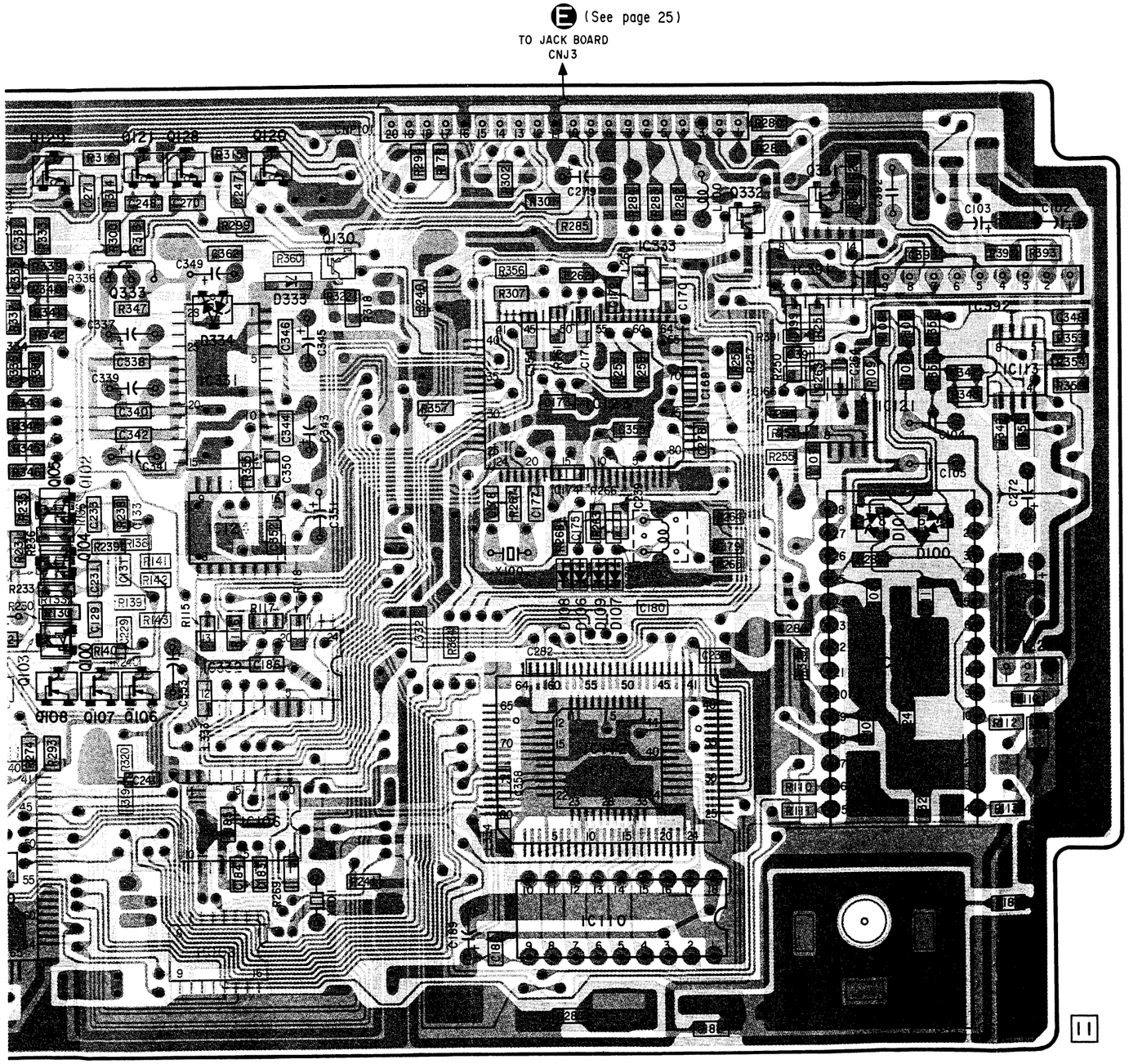

· Semiconductor Location

Ref. No.	Location	Ref. No.	Location
D100	D-11	Q125	F-4
D101	D-11	Q126	F-5
D102	F-4	Q127	E-5
D103	G-2	Q128	B-7
D104	D-4	Q129	B-6
D105	D-2	Q130	B-8
D106	D-9	Q331	B-11
D107	D-9	Q332	B-10
D108	D-9	Q333	B-6
D109	D-9		
D110	F-6		
D332	E-3		
D333	B-7		
D334	C-7		
IC101	C-4		
IC102	E-11		
IC103	B-3		
IC106	F-7		
IC108	G-7		
IC109	F-5		
IC110	F-9		
IC111	F-9		
IC112	E-9		
IC113	C-12		
IC114	B-5		
IC115	D-5		
IC116	D-3		
IC117	D-3		
IC118	C-3		
IC119	C-2		
IC120	C-2		
IC121	C-11		
IC122	E-12		
IC123	C-9		
IC124	D-7		
IC331	C-7		
IC332	E-7		
IC333	B-10		
IC391	B-11		
IC392	B-12		
Q100	E-6		
Q101	D-6		
Q102	D-6		
Q103	E-6		
Q104	D-6		
Q105	D-6		
Q106	E-6		
Q107	E-6		
Q108	E-6		
Q109	F-4		
Q110	F-4		
Q111	F-4		
Q112	D-2		
Q113	D-4		
Q114	D-4		
Q115	B-3		
Q116	C-3		
Q117	C-3		
Q118	E-6		
Q120	B-7		
Q121	B-7		
Q122	G-3		
Q123	F-2		
Q124	D-3		

Note on Mounting Diagram :

- o—— : Parts extracted from the component side.
- ● : Through hole.
- ▒ : Pattern on the side which is seen.
- ▒ : Pattern of the rear side.

SONY-04779 / Druck 10

SECTION 3
EXPLODED VIEWS

NOTE :
- -XX, -X mean standardized parts, so they may have some differences from the original one.
- Color Indication of Appearance Parts
  Example :
  KNOB, BALANCE (WHITE)...(RED)
  ↑ Parts color ↑ Cabinet's color
- Items marked "*" are not stocked since they are seldom required for routine service. Some delay should be anticipated when ordering these items.
- The mechanical parts with no reference number in the exploded views are not supplied.
- Hardware (# mark) list is given in the last of this parts list.

The components identified by mark ⚠ or dotted line with mark ⚠ are critical for safety.
Replace only with part number specified.

- G : Germany model
  IT : Itallian model

3-1. OVERALL SECTION 1

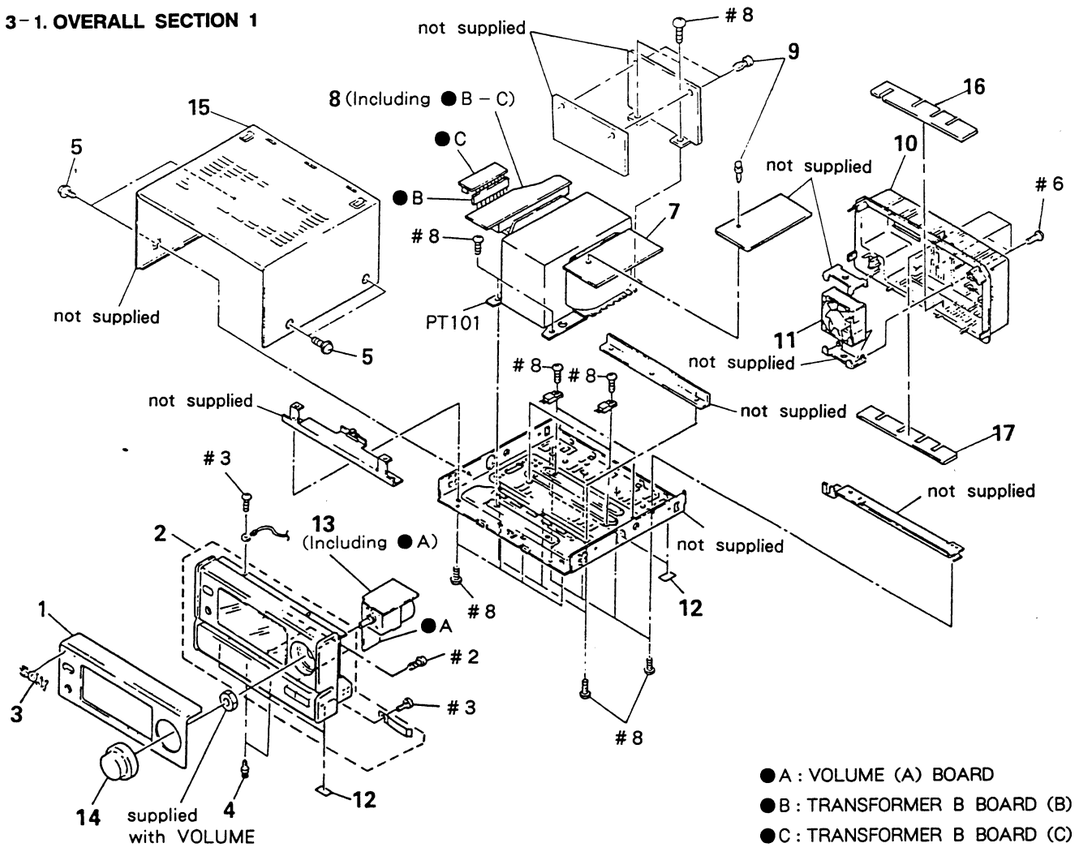

●A : VOLUME (A) BOARD
●B : TRANSFORMER B BOARD (B)
●C : TRANSFORMER B BOARD (C)

Ref. No.	Part No.	Description	Remarks
1	X-4941-948-1	PANEL ASSY, FRONT	
2	X-4941-537-1	PANEL (BASE) ASSY (H5600)	
	X-4941-539-1	PANEL (BASE) ASSY (H6600)	
3	4-942-636-01	EMBLEM (NO.3.5), SONY	
4	4-812-134-00	RIVET NYLON, 3.5	
5	3-363-099-01	SCREW (CASE +3X8 TP2)	
7	* 1-638-911-13	TRANSFORMER (A) BOARD	
8	* 1-638-912-12	TRANSFORMER (B) BOARD	
9	4-812-134-11	RIVET NYLON, 3.5	
10	4-943-336-41	PANEL, BACK	
11	1-541-860-11	MOTOR, DC FAN	
12	4-930-336-01	FOOT (FELT)	
13	* 1-638-906-12	VOLUME BOARD	
14	X-4941-532-1	KNOB (VOLUME) ASSY	
15	* 4-932-841-41	CASE	
16	4-947-205-01	PLATE (A), ORNAMENTAL	
17	4-947-206-01	PLATE (B), ORNAMENTAL	
PT101	⚠1-450-355-11	TRANSFORMER, POWER (UK)	
	⚠1-450-356-11	TRANSFORMER, POWER (AEP, G, IT)	

3-2. OVERALL SECTION 2

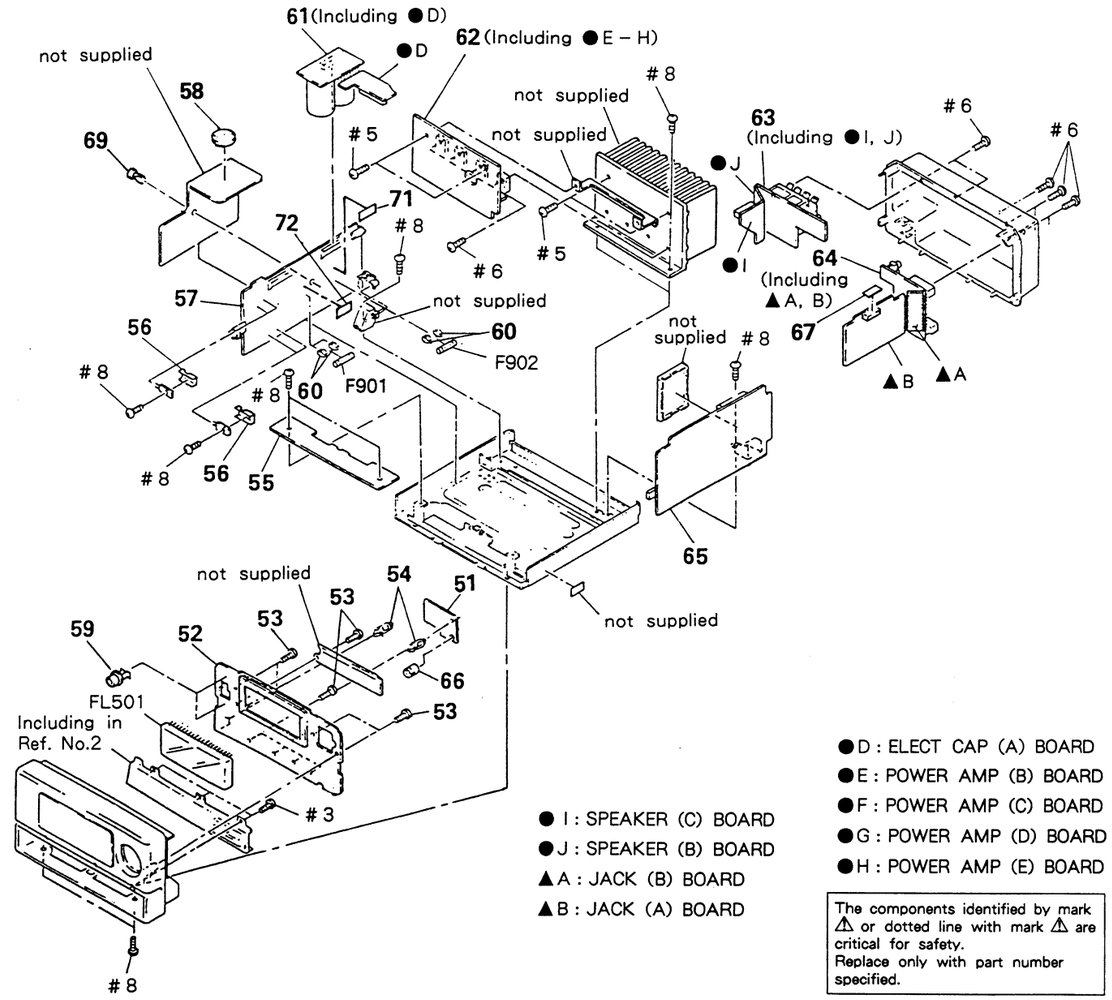

●I : SPEAKER (C) BOARD
●J : SPEAKER (B) BOARD
▲A : JACK (B) BOARD
▲B : JACK (A) BOARD

●D : ELECT CAP (A) BOARD
●E : POWER AMP (B) BOARD
●F : POWER AMP (C) BOARD
●G : POWER AMP (D) BOARD
●H : POWER AMP (E) BOARD

The components identified by mark ⚠ or dotted line with mark ⚠ are critical for safety.
Replace only with part number specified.

Ref. No.	Part No.	Description	Remarks
51	* 1-638-909-12	CONNECTOR BOARD	
52	* A-4341-606-A	PANEL BOARD, COMPLETE (H6600)	
	* A-4345-734-A	PANEL BOARD, COMPLETE (H5600)	
53	4-928-635-01	SCREW, +BV (2.6X8) TAPPING	
54	* 3-682-419-71	HOLDER, PCB	
55	* A-4341-598-A	FLD BOARD, COMPLETE	
56	* 3-309-144-21	HEAT SINK	
57	* A-4341-619-A	POWER SUPPLY BOARD, COMPLETE (AEP, UK)	
	* A-4341-623-A	POWER SUPPLY BOARD, COMPLETE (G, IT)	
58	* 4-932-810-11	CUSHION (FL)	
59	* 3-362-478-21	HOLDER (T), LED	
60	1-533-213-31	HOLDER, FUSE	
61	* 1-638-910-12	ELECT CAP BOARD	
62	* A-4341-620-A	POWER AMP BOARD, COMPLETE (AEP, UK)	
62	* A-4341-624-A	POWER AMP BOARD, COMPLETE (G, IT)	
63	* 1-638-907-12	SPEAKER BOARD	
64	* 1-638-904-12	JACK BOARD	
65	* A-4341-586-A	DSP BOARD, COMPLETE	
66	* 4-886-873-00	SPACER	
67	4-860-518-00	CUSHION	
69	4-812-134-11	RIBET NYLON, 3.5	
70	* 3-561-427-21	CUSHION	
72	3-701-947-15	LABEL (T2.5A), FUSE	
F901	⚠1-532-286-00	FUSE (T2.5A)	
FL501	1-519-654-11	INDICATOR TUBE, FLUORESCENT	

SONY-04779 / Druck 11

3-2. OVERALL SECTION 2

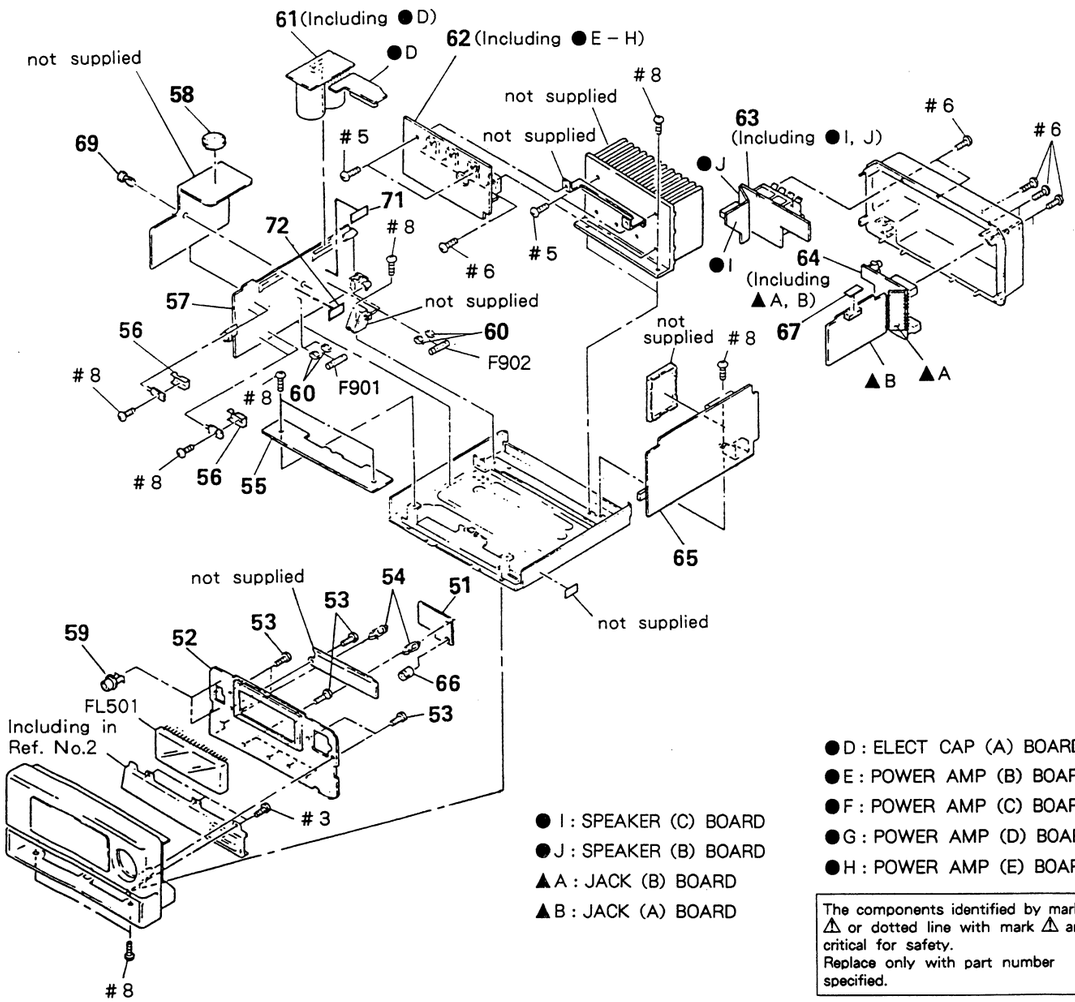

● I : SPEAKER (C) BOARD
●J : SPEAKER (B) BOARD
▲A : JACK (B) BOARD
▲B : JACK (A) BOARD

●D : ELECT CAP (A) BOARD
●E : POWER AMP (B) BOARD
●F : POWER AMP (C) BOARD
●G : POWER AMP (D) BOARD
●H : POWER AMP (E) BOARD

The components identified by mark ⚠ or dotted line with mark ⚠ are critical for safety.
Replace only with part number specified.

Ref. No.	Part No.	Description	Remarks
51	‡ 1-638-909-12	CONNECTOR BOARD	
52	‡ A-4341-606-A	PANEL BOARD, COMPLETE (H6600)	
	‡ A-4345-734-A	PANEL BOARD, COMPLETE (H5600)	
53	4-928-635-01	SCREW, +BV (2.6X8) TAPPING	
54	‡ 3-682-419-71	HOLDER, PCB	
55	‡ A-4341-598-A	FLD BOARD, COMPLETE	
56	‡ 3-309-144-21	HEAT SINK	
57	‡ A-4341-619-A	POWER SUPPLY BOARD, COMPLETE (AEP, UK)	
	‡ A-4341-623-A	POWER SUPPLY BOARD, COMPLETE (G, IT)	
58	‡ 4-932-810-11	CUSHION (FL)	
59	‡ 3-362-478-21	HOLDER (T), LED	
60	1-533-213-31	HOLDER, FUSE	
61	‡ 1-638-910-12	ELECT CAP BOARD	

Ref. No.	Part No.	Description	Remarks
62	‡ A-4341-620-A	POWER AMP BOARD, COMPLETE (AEP, UK)	
62	‡ A-4341-624-A	POWER AMP BOARD, COMPLETE (G, IT)	
63	‡ 1-638-907-12	SPEAKER BOARD	
64	‡ 1-638-904-12	JACK BOARD	
65	‡ A-4341-586-A	DSP BOARD, COMPLETE	
66	‡ 4-886-873-00	SPACER	
67	4-860-518-00	CUSHION	
69	4-812-134-11	RIBET NYLON, 3.5	
70	‡ 3-561-427-21	CUSHION	
72	3-701-947-15	LABEL (T2.5A), FUSE	
F901	⚠1-532-286-00	FUSE (T2.5A)	
FL501	1-519-654-11	INDICATOR TUBE, FLUORESCENT	

SECTION 4
ELECTRICAL PARTS LIST

PANEL **DSP**

NOTE:

The components identified by mark ⚠ or dotted line with mark ⚠ are critical for safety.
Replace only with part number specified.

When indicating parts by reference number, please include the board name.

- Due to standardization, replacements in the parts list may be different from the parts specified in the diagrams or the components used on the set.
- – XX, – X mean standardized parts, so they may have some difference from the original one.
- RESISTORS
  All resistors are in ohms.
  METAL : metal-film resistor
  METAL OXIDE : Metal Oxide-film resistor
  F : nonflammable
- Items marked "‡" are not stocked since they are seldom required for routine service. Some delay should be anticipated when ordering these items.
- SEMICONDUCTORS
  In each case, u : µ, for example :
  uA... : µA... , uPA... , µPA... , uPB... , µPB... , uPC... , µPC... , uPD..., µPD...
- CAPACITORS :
  uF : µF
- COILS
  uH : µH

Ref. No.	Part No.	Description	Remarks
	‡ A-4341-606-A	PANEL BOARD, COMPLETE (H6600)	
	‡ A-4345-734-A	PANEL BOARD, COMPLETE (H5600)	
		**********	
	‡ A-4341-586-A	DSP BOARD, COMPLETE	
		**********	
	‡ 3-362-478-21	HOLDER (T), LED	
		< CAPACITOR >	
C102	1-124-589-11	ELECT 47uF 20% 16V	
C103	1-124-589-11	ELECT 47uF 20% 16V	
C104	1-136-153-00	FILM 0.01uF 5% 50V	
C105	1-136-153-00	FILM 0.01uF 5% 50V	
C106	1-124-589-11	ELECT 47uF 20% 16V	
C107	1-164-004-11	CERAMIC CHIP 0.1uF 10% 25V	
C108	1-164-004-11	CERAMIC CHIP 0.1uF 10% 25V	
C109	1-163-021-91	CERAMIC CHIP 0.01uF 10% 50V	
C110	1-163-021-91	CERAMIC CHIP 0.01uF 10% 50V	
C111	1-163-021-91	CERAMIC CHIP 0.01uF 10% 50V	
C125	1-124-915-11	ELECT 10uF 20% 63V	
C126	1-130-475-00	MYLAR 0.0022uF 5% 50V	
C127	1-163-117-00	CERAMIC CHIP 100PF 5% 50V	
C128	1-124-915-11	ELECT 10uF 20% 63V	
C129	1-164-004-11	CERAMIC CHIP 0.1uF 10% 25V	
C130	1-124-915-11	ELECT 10uF 20% 63V	
C131	1-164-004-11	CERAMIC CHIP 0.1uF 10% 25V	
C132	1-124-915-11	ELECT 10uF 20% 63V	
C133	1-164-004-11	CERAMIC CHIP 0.1uF 10% 25V	
C134	1-124-910-11	ELECT 47uF 20% 50V	
C136	1-124-910-11	ELECT 47uF 20% 50V	
C137	1-124-910-11	ELECT 47uF 20% 50V	
C138	1-164-004-11	CERAMIC CHIP 0.1uF 10% 25V	
C139	1-164-346-11	CERAMIC CHIP 1uF 16V	
C140	1-164-346-11	CERAMIC CHIP 1uF 16V	

Ref. No.	Part No.	Description	Remarks
C141	1-164-004-11	CERAMIC CHIP 0.1uF 10% 25V	
C142	1-124-915-11	ELECT 10uF 20% 63V	
C143	1-164-346-11	CERAMIC CHIP 1uF 16V	
C144	1-124-910-11	ELECT 47uF 20% 50V	
C145	1-136-165-00	FILM 0.1uF 5% 50V	
C146	1-136-159-00	FILM 0.033uF 5% 50V	
C147	1-124-915-11	ELECT 10uF 20% 63V	
C148	1-164-346-11	CERAMIC CHIP 1uF 16V	
C149	1-124-910-11	ELECT 47uF 20% 50V	
C150	1-136-165-00	FILM 0.1uF 5% 50V	
C151	1-136-159-00	FILM 0.033uF 5% 50V	
C152	1-124-910-11	ELECT 47uF 20% 50V	
C153	1-164-004-11	CERAMIC CHIP 0.1uF 10% 25V	
C154	1-164-004-11	CERAMIC CHIP 0.1uF 10% 25V	
C155	1-164-346-11	CERAMIC CHIP 1uF 16V	
C156	1-164-004-11	CERAMIC CHIP 0.1uF 10% 25V	
C157	1-164-346-11	CERAMIC CHIP 1uF 16V	
C158	1-164-004-11	CERAMIC CHIP 0.1uF 10% 25V	
C159	1-163-021-91	CERAMIC CHIP 0.01uF 10% 50V	
C160	1-164-004-11	CERAMIC CHIP 0.1uF 10% 25V	
C161	1-164-346-11	CERAMIC CHIP 1uF 16V	
C162	1-164-004-11	CERAMIC CHIP 0.1uF 10% 25V	
C163	1-164-346-11	CERAMIC CHIP 1uF 16V	
C164	1-164-004-11	CERAMIC CHIP 0.1uF 10% 25V	
C165	1-163-021-91	CERAMIC CHIP 0.01uF 10% 50V	
C166	1-164-004-11	CERAMIC CHIP 0.1uF 10% 25V	
C169	1-164-346-11	CERAMIC CHIP 1uF 16V	
C170	1-163-109-00	CERAMIC CHIP 47PF 5% 50V	
C171	1-163-227-11	CERAMIC CHIP 10PF 5% 50V	
C172	1-163-109-00	CERAMIC CHIP 47PF 5% 50V	
C173	1-163-021-91	CERAMIC CHIP 0.01uF 10% 50V	
C174	1-163-021-91	CERAMIC CHIP 0.01uF 10% 50V	
C175	1-163-141-00	CERAMIC CHIP 0.001uF 5% 50V	
C176	1-163-141-00	CERAMIC CHIP 0.001uF 5% 50V	
C177	1-163-222-91	CERAMIC CHIP 5PF 0.25PF 50V	

SONY-04779 / Druck 12

PANEL DSP

Ref. No.	Part No.	Description				Remarks
C178	1-163-222-91	CERAMIC CHIP	5PF	0.25PF	50V	
C179	1-163-021-91	CERAMIC CHIP	0.01uF	10%	50V	
C180	1-163-021-91	CERAMIC CHIP	0.01uF	10%	50V	
C183	1-163-227-11	CERAMIC CHIP	10PF	5%	50V	
C184	1-163-227-11	CERAMIC CHIP	10PF	5%	50V	
C185	1-163-021-91	CERAMIC CHIP	0.01uF	10%	50V	
C186	1-163-021-91	CERAMIC CHIP	0.01uF	10%	50V	
C188	1-163-021-91	CERAMIC CHIP	0.01uF	10%	50V	
C189	1-124-589-11	ELECT	47uF	20%	16V	
C190	1-164-346-11	CERAMIC CHIP	1uF		16V	
C192	1-164-505-11	CERAMIC CHIP	2.2uF		16V	
C193	1-163-021-91	CERAMIC CHIP	0.01uF	10%	50V	
C195	1-163-021-91	CERAMIC CHIP	0.01uF	10%	50V	
C196	1-124-589-11	ELECT	47uF	20%	16V	
C197	1-124-910-11	ELECT	47uF	20%	50V	
C198	1-124-910-11	ELECT	47uF	20%	50V	
C199	1-163-129-00	CERAMIC CHIP	330PF	5%	50V	
C201	1-163-109-00	CERAMIC CHIP	47PF	5%	50V	
C202	1-163-109-00	CERAMIC CHIP	47PF	5%	50V	
C225	1-124-915-11	ELECT	10uF	20%	63V	
C226	1-130-475-00	MYLAR	0.0022uF	5%	50V	
C227	1-163-117-00	CERAMIC CHIP	100PF	5%	50V	
C228	1-124-915-11	ELECT	10uF	20%	63V	
C229	1-164-004-11	CERAMIC CHIP	0.1uF	10%	25V	
C230	1-124-915-11	ELECT	10uF	20%	63V	
C231	1-164-004-11	CERAMIC CHIP	0.1uF	10%	25V	
C232	1-124-915-11	ELECT	10uF	20%	63V	
C233	1-164-004-11	CERAMIC CHIP	0.1uF	10%	25V	
C234	1-124-910-11	ELECT	47uF	20%	50V	
C238	1-163-021-91	CERAMIC CHIP	0.01uF	10%	50V	
C239	1-163-117-00	CERAMIC CHIP	100PF	5%	50V	
C240	1-164-004-11	CERAMIC CHIP	0.1uF	10%	25V	
C241	1-164-004-11	CERAMIC CHIP	0.1uF	10%	25V	
C242	1-163-021-91	CERAMIC CHIP	0.01uF	10%	50V	
C243	1-164-004-11	CERAMIC CHIP	0.1uF	10%	25V	
C244	1-164-004-11	CERAMIC CHIP	0.1uF	10%	25V	
C245	1-164-004-11	CERAMIC CHIP	0.1uF	10%	25V	
C246	1-164-004-11	CERAMIC CHIP	0.1uF	10%	25V	
C247	1-164-004-11	CERAMIC CHIP	0.1uF	10%	25V	
C248	1-164-004-11	CERAMIC CHIP	0.1uF	10%	25V	
C249	1-164-346-11	CERAMIC CHIP	1uF		16V	
C250	1-164-346-11	CERAMIC CHIP	1uF		16V	
C253	1-164-346-11	CERAMIC CHIP	1uF		16V	
C254	1-164-346-11	CERAMIC CHIP	1uF		16V	
C255	1-164-346-11	CERAMIC CHIP	1uF		16V	

Ref. No.	Part No.	Description				Remarks
C256	1-164-346-11	CERAMIC CHIP	1uF		16V	
C257	1-164-346-11	CERAMIC CHIP	1uF		16V	
C258	1-164-346-11	CERAMIC CHIP	1uF		16V	
C259	1-164-346-11	CERAMIC CHIP	1uF		16V	
C260	1-164-346-11	CERAMIC CHIP	1uF		16V	
C261	1-164-346-11	CERAMIC CHIP	1uF		16V	
C262	1-164-346-11	CERAMIC CHIP	1uF		16V	
C263	1-164-346-11	CERAMIC CHIP	1uF		16V	
C264	1-164-346-11	CERAMIC CHIP	1uF		16V	
C269	1-164-004-11	CERAMIC CHIP	0.1uF	10%	25V	
C270	1-164-004-11	CERAMIC CHIP	0.1uF	10%	25V	
C271	1-164-004-11	CERAMIC CHIP	0.1uF	10%	25V	
C272	1-124-589-11	ELECT	47uF	20%	16V	
C273	1-163-129-00	CERAMIC CHIP	330PF	5%	50V	
C274	1-163-129-00	CERAMIC CHIP	330PF	5%	50V	
C275	1-163-141-00	CERAMIC CHIP	0.001uF	5%	50V	
C276	1-163-141-00	CERAMIC CHIP	0.001uF	5%	50V	
C279	1-126-163-11	ELECT	4.7uF	20%	50V	
C280	1-164-004-11	CERAMIC CHIP	0.1uF	10%	25V	
C282	1-163-021-91	CERAMIC CHIP	0.01uF	10%	50V	
C283	1-164-004-11	CERAMIC CHIP	0.1uF	10%	25V	
C331	1-163-123-00	CERAMIC CHIP	180PF	5%	50V	
C332	1-163-123-00	CERAMIC CHIP	180PF	5%	50V	
C333	1-163-131-00	CERAMIC CHIP	390PF	5%	50V	
C334	1-163-123-00	CERAMIC CHIP	180PF	5%	50V	
C335	1-163-123-00	CERAMIC CHIP	180PF	5%	50V	
C336	1-163-131-00	CERAMIC CHIP	390PF	5%	50V	
C337	1-124-229-00	ELECT	33uF	20%	10V	
C338	1-164-004-11	CERAMIC CHIP	0.1uF	10%	25V	
C339	1-124-229-00	ELECT	33uF	20%	10V	
C340	1-164-004-11	CERAMIC CHIP	0.1uF	10%	25V	
C341	1-124-229-00	ELECT	33uF	20%	10V	
C342	1-163-021-91	CERAMIC CHIP	0.01uF	10%	50V	
C343	1-124-229-00	ELECT	33uF	20%	10V	
C344	1-164-004-11	CERAMIC CHIP	0.1uF	10%	25V	
C345	1-124-229-00	ELECT	33uF	20%	10V	
C346	1-164-004-11	CERAMIC CHIP	0.1uF	10%	25V	
C347	1-163-101-00	CERAMIC CHIP	22PF	5%	50V	
C348	1-163-101-00	CERAMIC CHIP	22PF	5%	50V	
C349	1-126-157-11	ELECT	10uF	20%	16V	
C350	1-163-222-91	CERAMIC CHIP	5PF	0.25PF	50V	
C351	1-124-229-00	ELECT	33uF	20%	10V	
C352	1-164-004-11	CERAMIC CHIP	0.1uF	10%	25V	
C353	1-124-229-00	ELECT	33uF	20%	10V	
C355	1-164-004-11	CERAMIC CHIP	0.1uF	10%	25V	

PANEL DSP

Ref. No.	Part No.	Description				Remarks
C356	1-163-141-00	CERAMIC CHIP	0.001uF	5%	50V	
C357	1-163-021-91	CERAMIC CHIP	0.01uF	10%	50V	
C358	1-163-021-91	CERAMIC CHIP	0.01uF	10%	50V	
C362	1-164-004-11	CERAMIC CHIP	0.1uF	10%	25V	
C363	1-164-004-11	CERAMIC CHIP	0.1uF	10%	25V	
C391	1-163-117-00	CERAMIC CHIP	100PF	5%	50V	
C392	1-136-153-00	FILM	0.01uF	5%	50V	
C393	1-164-004-11	CERAMIC CHIP	0.1uF	10%	25V	
C501	1-124-667-11	ELECT	10uF	20%	100V	
C502	1-124-667-11	ELECT	10uF	20%	100V	
C505	1-164-004-11	CERAMIC CHIP	0.1uF	10%	25V	
C507	1-124-261-00	ELECT	10uF	20%	50V	
C508	1-124-589-11	ELECT	47uF	20%	16V	
C509	1-126-163-11	ELECT	4.7uF	20%	50V	
C510	1-126-301-11	ELECT	1uF	20%	50V	
C511	1-126-163-11	ELECT	4.7uF	20%	50V	
C513	1-163-124-00	CERAMIC CHIP	200PF	5%	50V	
C521	1-124-589-11	ELECT	47uF	20%	16V	
C522	1-124-589-11	ELECT	47uF	20%	16V	
C523	1-163-104-00	CERAMIC CHIP	30PF	5%	50V	
C524	1-163-104-00	CERAMIC CHIP	30PF	5%	50V	
C525	1-126-176-11	ELECT	220uF	20%	10V	
C526	1-124-261-00	ELECT	10uF	20%	50V	
C527	1-164-004-11	CERAMIC CHIP	0.1uF	10%	25V	
C528	1-164-004-11	CERAMIC CHIP	0.1uF	10%	25V	
C529	1-124-234-00	ELECT	22uF	20%	16V	
C530	1-163-141-00	CERAMIC CHIP	0.001uF	5%	50V	
C531	1-163-141-00	CERAMIC CHIP	0.001uF	5%	50V	

< CONNECTOR >

CN501	*	1-568-318-11	PLUG, CONNECTOR 6P
CN502	*	1-568-320-11	PLUG, CONNECTOR 8P
CN503		1-561-115-00	SOCKET, CONNECTOR 6P
CN504	*	1-568-320-11	PLUG, CONNECTOR 8P
CNJ102		1-568-319-11	SOCKET, CONNECTOR 8P
CNP101	*	1-566-154-11	CONNECTOR, BOARD TO BOARD 20P
CNP103		1-573-146-11	PLUG, CONNECTOR 8P
CNP104	*	1-564-509-11	PLUG, CONNECTOR 6P

< DIODE >

D100	8-719-800-76	DIODE	1SS226
D101	8-719-800-76	DIODE	1SS226
D102	8-719-990-39	DIODE	DCB010
D103	8-719-800-76	DIODE	1SS226
D104	8-719-800-76	DIODE	1SS226
D105	8-719-800-76	DIODE	1SS226
D106	8-719-002-81	DIODE	1T363
D107	8-719-002-81	DIODE	1T363
D108	8-719-002-81	DIODE	1T363
D109	8-719-002-81	DIODE	1T363
D110	8-719-990-39	DIODE	DCB010
D332	8-719-800-76	DIODE	1SS226
D333	8-719-210-39	DIODE	EC10QS-04
D334	8-719-106-08	DIODE	RD6.2M-B2
D501	8-719-977-03	DIODE	DTZ5.6B
D502	8-719-990-39	DIODE	DCB010
D503	8-719-990-39	DIODE	DCB010
D504	8-719-301-39	LED	SEL2210S-D
D505	8-719-301-39	LED	SEL2210S-D
D506	8-719-301-39	LED	SEL2210S-D
D507	8-719-301-39	LED	SEL2210S-D
D508	8-719-301-39	LED	SEL2210S-D
D509	8-719-301-39	LED	SEL2210S-D
D510	8-719-301-39	LED	SEL2210S-D
D511	8-719-301-39	LED	SEL2210S-D
D512	8-719-301-39	LED	SEL2210S-D
D514	8-719-301-44	LED	SEL2410E-D
D515	8-719-301-44	LED	SEL2410E-D
D521	8-719-977-04	DIODE	DTZ5.6C
D522	8-719-977-04	DIODE	DTZ5.6C
D523	8-719-990-39	DIODE	DCB010

< INDICATOR TUBE >

FL501	1-519-654-11	INDICATOR TUBE, FLUORESCENT	

< IC >

IC101	8-759-635-26	IC	M5283P
IC102	8-759-504-36	IC	AK5339-KP
IC103	8-759-805-14	IC	LC7822
IC106	8-759-511-68	IC	CXD8245M
IC108	8-752-339-86	IC	CXD2557M
IC109	8-759-041-72	IC	M37450M8-464FP
IC110	8-759-973-04	IC	MSM41464-10RS-K
IC111	8-752-341-99	IC	CXD2701Q
IC112	8-752-332-80	IC	CXD1160AQ
IC113	8-759-636-55	IC	M5218AFP

PANEL DSP

Ref. No.	Part No.	Description	Remarks
IC114	8-759-636-55	IC M5218AFP	
IC115	8-759-636-55	IC M5218AFP	
IC116	8-759-636-55	IC M5218AFP	
IC117	8-759-636-55	IC M5218AFP	
IC118	8-759-636-55	IC M5218AFP	
IC119	8-759-636-55	IC M5218AFP	
IC120	8-759-636-55	IC M5218AFP	
IC121	8-759-908-17	IC TL082CPS	
IC122	8-759-982-44	IC RC79L05A	
IC123	8-759-512-96	IC CXD2905Q	
IC124	8-759-517-14	IC MB625473PF-G	
IC331	8-752-344-10	IC CXD2561M-1	
IC332	8-752-342-65	IC CXD2560M	
IC333	8-759-234-20	IC TC7S08F	
IC391	8-759-927-29	IC SN74HCU04ANS	
IC392	8-759-250-81	IC TC5081AP	
IC501	8-759-512-46	IC MSC7162	
IC502	8-759-512-45	IC SN755731	
IC503	8-759-512-45	IC SN755731	
IC504	8-759-512-46	IC MSC7162	
IC505	8-759-512-47	IC SN755721	
IC506	8-759-246-46	IC TMP91C640F-2302	
IC507	8-759-605-16	IC M51953BL	
IC508	8-759-039-78	IC MC68HC11E9SC400366FU	
IC509	8-759-512-48	IC XR-1092	
		< COIL >	
L100	1-410-397-21	FERRITE BEAD INDUCTOR (1.1uH)	
L102	1-406-416-11	COIL (OSC) (0.6uH)	
L260	1-412-390-21	INDUCTOR, CHIP 0uH	
L262	1-412-390-21	INDUCTOR, CHIP 0uH	
L331	1-410-381-11	INDUCTOR CHIP 10uH	
L332	1-543-610-11	BEAD, FERRITE	
L333	1-412-390-21	INDUCTOR, CHIP 0uH	
L334	1-412-390-21	INDUCTOR, CHIP 0uH	
		< TRANSISTOR >	
Q100	8-729-107-46	TRANSISTOR 2SC3624A-L15	
Q101	8-729-107-46	TRANSISTOR 2SC3624A-L15	
Q102	8-729-107-46	TRANSISTOR 2SC3624A-L15	
Q103	8-729-107-46	TRANSISTOR 2SC3624A-L15	
Q104	8-729-107-46	TRANSISTOR 2SC3624A-L15	

Ref. No.	Part No.	Description	Remarks
Q105	8-729-107-46	TRANSISTOR 2SC3624A-L15	
Q106	8-729-805-65	TRANSISTOR 2SA1344	
Q107	8-729-805-65	TRANSISTOR 2SA1344	
Q108	8-729-805-65	TRANSISTOR 2SA1344	
Q109	8-729-602-21	TRANSISTOR 2SC4154-F	
Q110	8-729-805-65	TRANSISTOR 2SA1344	
Q111	8-729-805-65	TRANSISTOR 2SA1344	
Q112	8-729-107-46	TRANSISTOR 2SC3624A-L15	
Q113	8-729-107-46	TRANSISTOR 2SC3624A-L15	
Q114	8-729-107-46	TRANSISTOR 2SC3624A-L15	
Q115	8-729-805-41	TRANSISTOR 2SC3398	
Q116	8-729-602-21	TRANSISTOR 2SC4154-F	
Q117	8-729-602-21	TRANSISTOR 2SC4154-F	
Q118	8-729-805-41	TRANSISTOR 2SC3398	
Q120	8-729-107-46	TRANSISTOR 2SC3624A-L15	
Q121	8-729-107-46	TRANSISTOR 2SC3624A-L15	
Q122	8-729-602-21	TRANSISTOR 2SC4154-F	
Q123	8-729-805-65	TRANSISTOR 2SA1344	
Q124	8-729-107-46	TRANSISTOR 2SC3624A-L15	
Q125	8-729-602-36	TRANSISTOR 2SA1602-F	
Q126	8-729-805-65	TRANSISTOR 2SA1344	
Q127	8-729-805-41	TRANSISTOR 2SC3398	
Q128	8-729-107-46	TRANSISTOR 2SC3624A-L15	
Q129	8-729-107-46	TRANSISTOR 2SC3624A-L15	
Q130	8-729-805-65	TRANSISTOR 2SA1344	
Q331	8-729-805-41	TRANSISTOR 2SC3398	
Q332	8-729-805-65	TRANSISTOR 2SA1344	
Q333	8-729-205-97	TRANSISTOR 2SC3668-Y	
Q501	8-729-602-36	TRANSISTOR 2SA1602-F	
Q502	8-729-602-21	TRANSISTOR 2SC4154-F	
Q503	8-729-805-65	TRANSISTOR 2SA1344	
Q504	8-729-805-65	TRANSISTOR 2SA1344	
Q505	8-729-602-36	TRANSISTOR 2SA1602-F	
Q506	8-729-805-41	TRANSISTOR 2SC3398	
Q507	8-729-602-21	TRANSISTOR 2SC4154-F	
Q508	8-729-602-21	TRANSISTOR 2SC4154-F	
Q509	8-729-602-21	TRANSISTOR 2SC4154-F	
Q510	8-729-602-21	TRANSISTOR 2SC4154-F	
Q511	8-729-602-21	TRANSISTOR 2SC4154-F	
Q512	8-729-602-21	TRANSISTOR 2SC4154-F	
Q513	8-729-602-21	TRANSISTOR 2SC4154-F	
Q514	8-729-602-21	TRANSISTOR 2SC4154-F	
Q515	8-729-602-21	TRANSISTOR 2SC4154-F	
Q516	8-729-602-21	TRANSISTOR 2SC4154-F	
Q517	8-729-602-21	TRANSISTOR 2SC4154-F	

PANEL DSP

Ref. No.	Part No.	Description	Remarks
		< RESISTOR >	
R103	1-216-025-00	METAL CHIP 100 5% 1/10W	
R104	1-216-025-00	METAL CHIP 100 5% 1/10W	
R108	1-216-025-00	METAL CHIP 100 5% 1/10W	
R109	1-216-025-00	METAL CHIP 100 5% 1/10W	
R110	1-216-041-00	METAL CHIP 470 5% 1/10W	
R111	1-216-041-00	METAL CHIP 470 5% 1/10W	
R112	1-216-041-00	METAL CHIP 470 5% 1/10W	
R113	1-216-041-00	METAL CHIP 470 5% 1/10W	
R115	1-216-041-00	METAL CHIP 470 5% 1/10W	
R116	1-216-041-00	METAL CHIP 470 5% 1/10W	
R117	1-216-041-00	METAL CHIP 470 5% 1/10W	
R118	1-216-041-00	METAL CHIP 470 5% 1/10W	
R126	1-216-071-00	METAL CHIP 8.2K 5% 1/10W	
R127	1-216-049-00	METAL CHIP 1K 5% 1/10W	
R128	1-216-067-00	METAL CHIP 5.6K 5% 1/10W	
R129	1-216-065-00	METAL CHIP 4.7K 5% 1/10W	
R130	1-216-113-00	METAL CHIP 470K 5% 1/10W	
R131	1-216-053-00	METAL CHIP 1.5K 5% 1/10W	
R132	1-216-061-00	METAL CHIP 3.3K 5% 1/10W	
R133	1-216-113-00	METAL CHIP 470K 5% 1/10W	
R134	1-216-043-00	METAL CHIP 560 5% 1/10W	
R135	1-216-057-00	METAL CHIP 2.2K 5% 1/10W	
R136	1-216-113-00	METAL CHIP 470K 5% 1/10W	
R137	1-216-061-00	METAL CHIP 3.3K 5% 1/10W	
R138	1-216-065-00	METAL CHIP 4.7K 5% 1/10W	
R139	1-216-065-00	METAL CHIP 4.7K 5% 1/10W	
R140	1-216-065-00	METAL CHIP 4.7K 5% 1/10W	
R141	1-216-097-00	METAL CHIP 100K 5% 1/10W	
R142	1-216-097-00	METAL CHIP 100K 5% 1/10W	
R143	1-216-097-00	METAL CHIP 100K 5% 1/10W	
R146	1-216-073-00	METAL CHIP 10K 5% 1/10W	
R147	1-216-065-00	METAL CHIP 4.7K 5% 1/10W	
R148	1-216-073-00	METAL CHIP 10K 5% 1/10W	
R149	1-216-097-00	METAL CHIP 100K 5% 1/10W	
R150	1-216-097-00	METAL CHIP 100K 5% 1/10W	
R151	1-216-065-00	METAL CHIP 4.7K 5% 1/10W	
R152	1-216-089-00	METAL CHIP 47K 5% 1/10W	
R153	1-216-065-00	METAL CHIP 4.7K 5% 1/10W	
R154	1-216-089-00	METAL CHIP 47K 5% 1/10W	
R155	1-216-049-00	METAL CHIP 1K 5% 1/10W	

Ref. No.	Part No.	Description	Remarks
R156	1-216-081-00	METAL CHIP 22K 5% 1/10W	
R157	1-216-103-00	METAL CHIP 180K 5% 1/10W	
R158	1-216-081-00	METAL CHIP 22K 5% 1/10W	
R159	1-216-073-00	METAL CHIP 10K 5% 1/10W	
R160	1-216-049-00	METAL CHIP 1K 5% 1/10W	
R161	1-216-059-00	METAL CHIP 2.7K 5% 1/10W	
R162	1-216-094-00	METAL GLAZE 75K 5% 1/10W	
R163	1-216-049-00	METAL CHIP 1K 5% 1/10W	
R164	1-216-081-00	METAL CHIP 22K 5% 1/10W	
R165	1-216-103-00	METAL CHIP 180K 5% 1/10W	
R166	1-216-081-00	METAL CHIP 22K 5% 1/10W	
R167	1-216-073-00	METAL CHIP 10K 5% 1/10W	
R168	1-216-049-00	METAL CHIP 1K 5% 1/10W	
R169	1-216-059-00	METAL CHIP 2.7K 5% 1/10W	
R170	1-216-094-00	METAL GLAZE 75K 5% 1/10W	
R171	1-216-089-00	METAL CHIP 47K 5% 1/10W	
R172	1-216-089-00	METAL CHIP 47K 5% 1/10W	
R173	1-216-089-00	METAL CHIP 47K 5% 1/10W	
R174	1-216-071-00	METAL CHIP 8.2K 5% 1/10W	
R175	1-216-089-00	METAL CHIP 47K 5% 1/10W	
R176	1-216-041-00	METAL CHIP 470 5% 1/10W	
R177	1-216-097-00	METAL CHIP 100K 5% 1/10W	
R178	1-216-025-00	METAL CHIP 100 5% 1/10W	
R179	1-216-073-00	METAL CHIP 10K 5% 1/10W	
R180	1-216-033-00	METAL CHIP 220 5% 1/10W	
R181	1-216-033-00	METAL CHIP 220 5% 1/10W	
R182	1-216-073-00	METAL CHIP 10K 5% 1/10W	
R183	1-216-079-00	METAL CHIP 18K 5% 1/10W	
R184	1-216-051-00	METAL CHIP 1.2K 5% 1/10W	
R185	1-216-061-00	METAL CHIP 3.3K 5% 1/10W	
R186	1-216-071-00	METAL CHIP 8.2K 5% 1/10W	
R187	1-216-083-00	METAL CHIP 27K 5% 1/10W	
R188	1-216-117-00	METAL CHIP 680K 5% 1/10W	
R189	1-216-093-00	METAL CHIP 68K 5% 1/10W	
R190	1-216-103-00	METAL CHIP 180K 5% 1/10W	
R191	1-216-119-00	METAL CHIP 820K 5% 1/10W	
R192	1-216-097-00	METAL CHIP 100K 5% 1/10W	
R193	1-216-097-00	METAL CHIP 100K 5% 1/10W	
R194	1-216-081-00	METAL CHIP 22K 5% 1/10W	
R195	1-216-089-00	METAL CHIP 47K 5% 1/10W	
R196	1-216-082-00	METAL GLAZE 24K 5% 1/10W	
R197	1-216-073-00	METAL CHIP 10K 5% 1/10W	
R198	1-216-073-00	METAL CHIP 10K 5% 1/10W	
R199	1-216-079-00	METAL CHIP 18K 5% 1/10W	
R200	1-216-051-00	METAL CHIP 1.2K 5% 1/10W	

SONY-04779 / Druck 13

PANEL DSP

Ref. No.	Part No.	Description				Remarks
R201	1-216-061-00	METAL CHIP	3.3K	5%	1/10W	
R202	1-216-071-00	METAL CHIP	8.2K	5%	1/10W	
R203	1-216-083-00	METAL CHIP	27K	5%	1/10W	
R204	1-216-117-00	METAL CHIP	680K	5%	1/10W	
R205	1-216-093-00	METAL CHIP	68K	5%	1/10W	
R206	1-216-103-00	METAL CHIP	180K	5%	1/10W	
R207	1-216-119-00	METAL CHIP	820K	5%	1/10W	
R208	1-216-097-00	METAL CHIP	100K	5%	1/10W	
R209	1-216-097-00	METAL CHIP	100K	5%	1/10W	
R210	1-216-081-00	METAL CHIP	22K	5%	1/10W	
R211	1-216-089-00	METAL CHIP	47K	5%	1/10W	
R212	1-216-082-00	METAL GLAZE	24K	5%	1/10W	
R213	1-216-049-00	METAL CHIP	1K	5%	1/10W	
R214	1-216-049-00	METAL CHIP	1K	5%	1/10W	
R215	1-216-049-00	METAL CHIP	1K	5%	1/10W	
R216	1-216-033-00	METAL CHIP	220	5%	1/10W	
R217	1-216-033-00	METAL CHIP	220	5%	1/10W	
R218	1-216-089-00	METAL CHIP	47K	5%	1/10W	
R226	1-216-071-00	METAL CHIP	8.2K	5%	1/10W	
R227	1-216-049-00	METAL CHIP	1K	5%	1/10W	
R228	1-216-067-00	METAL CHIP	5.6K	5%	1/10W	
R229	1-216-065-00	METAL CHIP	4.7K	5%	1/10W	
R230	1-216-113-00	METAL CHIP	470K	5%	1/10W	
R231	1-216-053-00	METAL CHIP	1.5K	5%	1/10W	
R232	1-216-061-00	METAL CHIP	3.3K	5%	1/10W	
R233	1-216-113-00	METAL CHIP	470K	5%	1/10W	
R234	1-216-043-00	METAL CHIP	560	5%	1/10W	
R235	1-216-057-00	METAL CHIP	2.2K	5%	1/10W	
R236	1-216-113-00	METAL CHIP	470K	5%	1/10W	
R237	1-216-061-00	METAL CHIP	3.3K	5%	1/10W	
R238	1-216-065-00	METAL CHIP	4.7K	5%	1/10W	
R239	1-216-065-00	METAL CHIP	4.7K	5%	1/10W	
R240	1-216-065-00	METAL CHIP	4.7K	5%	1/10W	
R241	1-216-073-00	METAL CHIP	10K	5%	1/10W	
R242	1-216-097-00	METAL CHIP	100K	5%	1/10W	
R243	1-216-097-00	METAL CHIP	100K	5%	1/10W	
R250	1-216-037-00	METAL CHIP	330	5%	1/10W	
R251	1-216-065-00	METAL CHIP	4.7K	5%	1/10W	
R252	1-216-057-00	METAL CHIP	2.2K	5%	1/10W	
R253	1-216-077-00	METAL CHIP	15K	5%	1/10W	
R254	1-216-073-00	METAL CHIP	10K	5%	1/10W	
R255	1-216-097-00	METAL CHIP	100K	5%	1/10W	
R256	1-216-025-00	METAL CHIP	100	5%	1/10W	
R257	1-216-025-00	METAL CHIP	100	5%	1/10W	
R258	1-216-041-00	METAL CHIP	470	5%	1/10W	

Ref. No.	Part No.	Description				Remarks
R259	1-216-041-00	METAL CHIP	470	5%	1/10W	
R261	1-216-017-00	METAL CHIP	47	5%	1/10W	
R263	1-216-073-00	METAL CHIP	10K	5%	1/10W	
R264	1-216-089-00	METAL CHIP	47K	5%	1/10W	
R265	1-216-089-00	METAL CHIP	47K	5%	1/10W	
R266	1-216-121-00	METAL CHIP	1M	5%	1/10W	
R267	1-216-081-00	METAL CHIP	22K	5%	1/10W	
R268	1-216-025-00	METAL CHIP	100	5%	1/10W	
R269	1-216-025-00	METAL CHIP	100	5%	1/10W	
R272	1-216-113-00	METAL CHIP	470K	5%	1/10W	
R274	1-216-041-00	METAL CHIP	470	5%	1/10W	
R275	1-216-025-00	METAL CHIP	100	5%	1/10W	
R276	1-216-025-00	METAL CHIP	100	5%	1/10W	
R277	1-216-049-00	METAL CHIP	1K	5%	1/10W	
R279	1-216-076-00	METAL GLAZE	13K	5%	1/10W	
R280	1-216-025-00	METAL CHIP	100	5%	1/10W	
R281	1-216-025-00	METAL CHIP	100	5%	1/10W	
R282	1-216-025-00	METAL CHIP	100	5%	1/10W	
R283	1-216-025-00	METAL CHIP	100	5%	1/10W	
R284	1-216-033-00	METAL CHIP	220	5%	1/10W	
R285	1-216-025-00	METAL CHIP	100	5%	1/10W	
R286	1-216-001-00	METAL CHIP	10	5%	1/10W	
R287	1-216-089-00	METAL CHIP	47K	5%	1/10W	
R288	1-216-089-00	METAL CHIP	47K	5%	1/10W	
R289	1-216-033-00	METAL CHIP	220	5%	1/10W	
R290	1-216-033-00	METAL CHIP	220	5%	1/10W	
R291	1-216-073-00	METAL CHIP	10K	5%	1/10W	
R292	1-216-076-00	METAL GLAZE	13K	5%	1/10W	
R293	1-216-073-00	METAL CHIP	10K	5%	1/10W	
R294	1-216-025-00	METAL CHIP	100	5%	1/10W	
R295	1-216-121-00	METAL CHIP	1M	5%	1/10W	
R296	1-216-121-00	METAL CHIP	1M	5%	1/10W	
R297	1-216-097-00	METAL CHIP	100K	5%	1/10W	
R298	1-216-097-00	METAL CHIP	100K	5%	1/10W	
R299	1-216-073-00	METAL CHIP	10K	5%	1/10W	
R300	1-216-073-00	METAL CHIP	10K	5%	1/10W	
R301	1-216-025-00	METAL CHIP	100	5%	1/10W	
R302	1-216-025-00	METAL CHIP	100	5%	1/10W	
R303	1-216-081-00	METAL CHIP	22K	5%	1/10W	
R306	1-216-097-00	METAL CHIP	100K	5%	1/10W	
R307	1-216-017-00	METAL CHIP	47	5%	1/10W	
R308	1-216-041-00	METAL CHIP	470	5%	1/10W	
R309	1-216-073-00	METAL CHIP	10K	5%	1/10W	
R310	1-216-073-00	METAL CHIP	10K	5%	1/10W	
R311	1-216-073-00	METAL CHIP	10K	5%	1/10W	

PANEL DSP

Ref. No.	Part No.	Description				Remarks
R312	1-216-073-00	METAL CHIP	10K	5%	1/10W	
R313	1-216-073-00	METAL CHIP	10K	5%	1/10W	
R314	1-216-073-00	METAL CHIP	10K	5%	1/10W	
R315	1-216-033-00	METAL CHIP	220	5%	1/10W	
R316	1-216-033-00	METAL CHIP	220	5%	1/10W	
R317	1-216-025-00	METAL CHIP	100	5%	1/10W	
R318	1-216-295-00	METAL CHIP	0	5%	1/10W	
R319	1-216-113-00	METAL CHIP	470K	5%	1/10W	
R320	1-216-065-00	METAL CHIP	4.7K	5%	1/10W	
R321	1-216-121-00	METAL CHIP	1M	5%	1/10W	
R322	1-216-089-00	METAL CHIP	47K	5%	1/10W	
R323	1-216-295-00	METAL CHIP	0	5%	1/10W	
R331	1-216-075-00	METAL CHIP	12K	5%	1/10W	
R332	1-216-075-00	METAL CHIP	12K	5%	1/10W	
R333	1-216-061-00	METAL CHIP	3.3K	5%	1/10W	
R334	1-216-061-00	METAL CHIP	3.3K	5%	1/10W	
R335	1-216-075-00	METAL CHIP	12K	5%	1/10W	
R336	1-216-075-00	METAL CHIP	12K	5%	1/10W	
R337	1-216-061-00	METAL CHIP	3.3K	5%	1/10W	
R338	1-216-061-00	METAL CHIP	3.3K	5%	1/10W	
R339	1-216-071-00	METAL CHIP	8.2K	5%	1/10W	
R340	1-216-071-00	METAL CHIP	8.2K	5%	1/10W	
R341	1-216-071-00	METAL CHIP	8.2K	5%	1/10W	
R342	1-216-071-00	METAL CHIP	8.2K	5%	1/10W	
R343	1-216-071-00	METAL CHIP	8.2K	5%	1/10W	
R344	1-216-071-00	METAL CHIP	8.2K	5%	1/10W	
R345	1-216-071-00	METAL CHIP	8.2K	5%	1/10W	
R346	1-216-071-00	METAL CHIP	8.2K	5%	1/10W	
R347	1-216-065-00	METAL CHIP	4.7K	5%	1/10W	
R348	1-216-088-00	METAL CHIP	43K	5%	1/10W	
R349	1-216-129-00	METAL CHIP	2.2M	5%	1/10W	
R350	1-216-081-00	METAL CHIP	22K	5%	1/10W	
R351	1-216-088-00	METAL CHIP	43K	5%	1/10W	
R352	1-216-088-00	METAL CHIP	43K	5%	1/10W	
R353	1-216-088-00	METAL CHIP	43K	5%	1/10W	
R354	1-216-081-00	METAL CHIP	22K	5%	1/10W	
R355	1-216-033-00	METAL CHIP	220	5%	1/10W	
R356	1-216-033-00	METAL CHIP	220	5%	1/10W	
R357	1-216-033-00	METAL CHIP	220	5%	1/10W	
R358	1-216-057-00	METAL CHIP	2.2K	5%	1/10W	
R359	1-216-129-00	METAL CHIP	2.2M	5%	1/10W	
R360	1-216-001-00	METAL CHIP	10	5%	1/10W	
R361	1-216-033-00	METAL CHIP	220	5%	1/10W	
R364	1-216-033-00	METAL CHIP	220	5%	1/10W	
R391	1-216-044-00	METAL CHIP	620	5%	1/10W	

Ref. No.	Part No.	Description				Remarks
R392	1-216-065-00	METAL CHIP	4.7K	5%	1/10W	
R393	1-216-065-00	METAL CHIP	4.7K	5%	1/10W	
R501	1-216-121-00	METAL CHIP	1M	5%	1/10W	
R502	1-216-071-00	METAL CHIP	8.2K	5%	1/10W	
R503	1-216-055-00	METAL CHIP	1.8K	5%	1/10W	
R504	1-216-073-00	METAL CHIP	10K	5%	1/10W	
R505	1-216-081-00	METAL CHIP	22K	5%	1/10W	
R506	1-216-081-00	METAL CHIP	22K	5%	1/10W	
R507	1-216-073-00	METAL CHIP	10K	5%	1/10W	
R508	1-216-081-00	METAL CHIP	22K	5%	1/10W	
R511	1-216-081-00	METAL CHIP	22K	5%	1/10W	
R514	1-216-081-00	METAL CHIP	22K	5%	1/10W	
R516	1-216-073-00	METAL CHIP	10K	5%	1/10W	
R518	1-216-073-00	METAL CHIP	10K	5%	1/10W	
R519	1-216-073-00	METAL CHIP	10K	5%	1/10W	
R520	1-216-085-00	METAL CHIP	33K	5%	1/10W	
R521	1-216-025-00	METAL CHIP	100	5%	1/10W	
R522	1-216-025-00	METAL CHIP	100	5%	1/10W	
R523	1-216-121-00	METAL CHIP	1M	5%	1/10W	
R524	1-216-025-00	METAL CHIP	100	5%	1/10W	
R525	1-216-025-00	METAL CHIP	100	5%	1/10W	
R526	1-216-025-00	METAL CHIP	100	5%	1/10W	
R527	1-216-025-00	METAL CHIP	100	5%	1/10W	
R528	1-216-025-00	METAL CHIP	100	5%	1/10W	
R529	1-216-025-00	METAL CHIP	100	5%	1/10W	
R530	1-216-025-00	METAL CHIP	100	5%	1/10W	
R531	1-216-025-00	METAL CHIP	100	5%	1/10W	
R532	1-216-025-00	METAL CHIP	100	5%	1/10W	
R534	1-216-073-00	METAL CHIP	10K	5%	1/10W	
R535	1-216-025-00	METAL CHIP	100	5%	1/10W	
R536	1-216-025-00	METAL CHIP	100	5%	1/10W	
R537	1-216-025-00	METAL CHIP	100	5%	1/10W	
R538	1-216-025-00	METAL CHIP	100	5%	1/10W	
R539	1-216-025-00	METAL CHIP	100	5%	1/10W	
R540	1-216-053-00	METAL CHIP	1.5K	5%	1/10W	
R541	1-216-053-00	METAL CHIP	1.5K	5%	1/10W	
R542	1-216-025-00	METAL CHIP	100	5%	1/10W	
R543	1-216-025-00	METAL CHIP	100	5%	1/10W	
R544	1-216-027-00	METAL CHIP	120	5%	1/10W	
R545	1-216-027-00	METAL CHIP	120	5%	1/10W	
R546	1-216-027-00	METAL CHIP	120	5%	1/10W	
R547	1-216-027-00	METAL CHIP	120	5%	1/10W	
R548	1-216-029-00	METAL CHIP	150	5%	1/10W	
R549	1-216-029-00	METAL CHIP	150	5%	1/10W	
R550	1-216-063-00	METAL CHIP	3.9K	5%	1/10W	

SONY-04779 / Druck 14

PANEL | DSP | POWER SUPPLY | JACK

Ref. No.	Part No.	Description				Remarks
R551	1-216-063-00	METAL CHIP	3.9K	5%	1/10W	
R552	1-216-057-00	METAL CHIP	2.2K	5%	1/10W	
R553	1-216-057-00	METAL CHIP	2.2K	5%	1/10W	
R554	1-216-063-00	METAL CHIP	3.9K	5%	1/10W	
R555	1-216-063-00	METAL CHIP	3.9K	5%	1/10W	
R556	1-216-075-00	METAL CHIP	12K	5%	1/10W	
R557	1-216-075-00	METAL CHIP	12K	5%	1/10W	
R558	1-216-025-00	METAL CHIP	100	5%	1/10W	
R559	1-216-025-00	METAL CHIP	100	5%	1/10W	
R560	1-216-027-00	METAL CHIP	120	5%	1/10W	
R561	1-216-027-00	METAL CHIP	120	5%	1/10W	
R562	1-216-021-00	METAL CHIP	68	5%	1/10W	
R563	1-216-021-00	METAL CHIP	68	5%	1/10W	
R564	1-216-021-00	METAL CHIP	68	5%	1/10W	
R565	1-216-027-00	METAL CHIP	120	5%	1/10W	
R566	1-216-027-00	METAL CHIP	120	5%	1/10W	
R567	1-216-049-00	METAL CHIP	1K	5%	1/10W	
R568	1-216-073-00	METAL CHIP	10K	5%	1/10W	
R569	1-216-049-00	METAL CHIP	1K	5%	1/10W	
R570	1-216-025-00	METAL CHIP	100	5%	1/10W	
R572	1-216-025-00	METAL CHIP	100	5%	1/10W	
R573	1-216-025-00	METAL CHIP	100	5%	1/10W	
R574	1-216-069-00	METAL CHIP	6.8K	5%	1/10W	
R575	1-216-089-00	METAL CHIP	47K	5%	1/10W	
R576	1-216-089-00	METAL CHIP	47K	5%	1/10W	
R577	1-216-073-00	METAL CHIP	10K	5%	1/10W	
R578	1-216-073-00	METAL CHIP	10K	5%	1/10W	
R579	1-216-073-00	METAL CHIP	10K	5%	1/10W	
R580	1-216-025-00	METAL CHIP	100	5%	1/10W	
R581	1-216-025-00	METAL CHIP	100	5%	1/10W	
R582	1-216-073-00	METAL CHIP	10K	5%	1/10W	
R583	1-216-049-11	METAL CHIP	10K	5%	1/10W	(H6600)
R584	1-216-049-00	METAL CHIP	1K	5%	1/10W	
R585	1-216-049-00	METAL CHIP	1K	5%	1/10W	
R586	1-216-049-00	METAL CHIP	1K	5%	1/10W	
R587	1-216-049-00	METAL CHIP	1K	5%	1/10W	
R588	1-216-049-00	METAL CHIP	1K	5%	1/10W	
R589	1-216-049-00	METAL CHIP	1K	5%	1/10W	
R590	1-216-049-00	METAL CHIP	1K	5%	1/10W	
R591	1-216-019-00	METAL CHIP	56	5%	1/10W	
R592	1-216-019-00	METAL CHIP	56	5%	1/10W	
R593	1-216-019-00	METAL CHIP	56	5%	1/10W	
R594	1-216-073-00	METAL CHIP	10K	5%	1/10W	
R621	1-216-049-00	METAL CHIP	1K	5%	1/10W	
R622	1-216-049-00	METAL CHIP	1K	5%	1/10W	

Ref. No.	Part No.	Description				Remarks
R623	1-216-081-00	METAL CHIP	22K	5%	1/10W	(H5600)
		< SWITCH >				
S501	1-554-303-21	SWITCH, TACTILE (SYSTEM POWER)				
S502	1-554-303-21	SWITCH, TACTILE (DISPLAY)				
S503	1-554-303-21	SWITCH, TACTILE (BALANCE)				
S504	1-554-303-21	SWITCH, TACTILE (WAKE UP)				
S505	1-554-303-21	SWITCH, TACTILE (DBFB)				
S506	1-554-303-21	SWITCH, TACTILE (EFFECT)				
S507	1-554-303-21	SWITCH, TACTILE (DYNAMIC SOUND)				
S508	1-554-303-21	SWITCH, TACTILE (PRESET)				
S509	1-554-303-21	SWITCH, TACTILE (PARAMETRIC EQUALIZER)				
S510	1-554-303-21	SWITCH, TACTILE (ON/OFF)				
S511	1-554-303-21	SWITCH, TACTILE (PRESENCE SURROUND)				
S512	1-554-303-21	SWITCH, TACTILE (MEMORY)				
S513	1-554-303-21	SWITCH, TACTILE (▶) (CURSOR CONTROL)				
S514	1-554-303-21	SWITCH, TACTILE (▲) (CURSOR CONTROL)				
S515	1-554-303-21	SWITCH, TACTILE (▼) (CURSOR CONTROL)				
S516	1-554-303-21	SWITCH, TACTILE (◀) (CURSOR CONTROL)				
S517	1-554-303-21	SWITCH, TACTILE (VIDEO)				
S518	1-554-303-21	SWITCH, TACTILE (AUDIO)				
		< VIBRATOR >				
X100	1-579-069-11	VIBRATOR, CRYSTAL (49.152MHz)				
X101	1-577-253-11	VIBRATOR, CERAMIC (16.93MHz)				
X102	1-579-125-11	VIBRATOR, CERAMIC (8MHz)				
X501	1-579-351-11	VIBRATOR, CERAMIC (15MHz)				
X502	1-579-125-11	VIBRATOR, CERAMIC (8MHz)				

****

*	A-4341-619-A	POWER SUPPLY BOARD, COMPLETE (AEP,UK)				
*	A-4341-623-A	POWER SUPPLY BOARD, COMPLETE (G, IT)				
		**********				
*	1-638-904-12	JACK BOARD				
		**********				
*	1-533-213-31	HOLDER, FUSE				
*	3-309-144-21	HEAT SINK				
	7-682-547-04	SCREW +BVTT 3X6 (S)				
		< CAPACITOR >				
C1	1-124-915-11	ELECT	10uF	20%	63V	
C2	1-162-306-11	CERAMIC	0.01uF	20%	16V	
C3	1-162-306-11	CERAMIC	0.01uF	20%	16V	
C5	1-136-153-00	FILM	0.01uF	5%	50V	
C7	1-162-306-11	CERAMIC	0.01uF	20%	16V	

POWER SUPPLY | JACK

Ref. No.	Part No.	Description				Remarks
C651	1-162-282-31	CERAMIC	100PF	10%	50V	
C652	1-162-282-31	CERAMIC	100PF	10%	50V	
C653	1-161-379-00	CERAMIC	0.01uF	20%	25V	
C654	1-162-294-31	CERAMIC	0.001uF	10%	50V	
C655	1-124-903-11	ELECT	1uF	20%	50V	
C656	1-124-119-00	ELECT	330uF	20%	16V	
C661	1-162-282-31	CERAMIC	100PF	10%	50V	
C662	1-162-282-31	CERAMIC	100PF	10%	50V	
C663	1-161-379-00	CERAMIC	0.01uF	20%	25V	
C664	1-162-294-31	CERAMIC	0.001uF	10%	50V	
C665	1-124-903-11	ELECT	1uF	20%	50V	
C903	1-126-943-11	ELECT	2200uF	20%	25V	
C904	1-126-943-11	ELECT	2200uF	20%	25V	
C907	1-136-165-00	FILM	0.1uF	5%	50V	
C908	1-136-165-00	FILM	0.1uF	5%	50V	
C909	1-124-477-11	ELECT	47uF	20%	25V	
C910	1-124-477-11	ELECT	47uF	20%	25V	
C911	1-124-915-11	ELECT	10uF	20%	63V	
C912	1-124-915-11	ELECT	10uF	20%	63V	
C913	1-124-915-11	ELECT	10uF	20%	63V	
C914	1-126-768-11	ELECT	2200uF	20%	16V	
C915	1-124-915-11	ELECT	10uF	20%	63V	
C916	1-124-915-11	ELECT	10uF	20%	63V	
C917	1-124-910-11	ELECT	47uF	20%	50V	
C918	1-124-915-11	ELECT	10uF	20%	63V	

< CONNECTOR >

CNJ1	* 1-580-739-11	SOCKET, CONNECTOR 15P (SYSTEM CONTROL 1)	
CNJ2	* 1-580-740-11	SOCKET, CONNECTOR 17P (SYSTEM CONTROL 2)	
CNP5	* 1-564-509-11	PLUG, CONNECTOR 6P	
CNP6	* 1-564-509-11	PLUG, CONNECTOR 6P	
CNP7	* 1-564-499-11	PIN, CONNECTOR 6P	
CNP902	1-564-506-41	PIN, CONNECTOR 3P (YEL)	
CNP903	* 1-564-321-00	PIN, CONNECTOR 2P	
CNP904	* 1-573-109-11	PIN, CONNECTOR 15P	
CNP904A	1-564-506-31	PIN, CONNECTOR 3P (RED)	
CNP906	* 1-573-087-11	PIN, CONNECTOR 13P	
CNP907	* 1-506-981-11	PIN, CONNECTOR 10P	
CNP908	1-568-317-11	SOCKET, CONNECTOR 6P	
CNP909	* 1-573-148-11	PLUG, CONNECTOR 12P	
CNP910	* 1-564-337-00	PIN, CONNECTOR 3P	
CNP911	* 1-564-505-11	PLUG, CONNECTOR 2P	

Ref. No.	Part No.	Description		Remarks
		< DIODE >		
D891	8-719-912-20	DIODE	1SS120	
D892	8-719-912-20	DIODE	1SS120	
D901	8-719-302-38	DIODE	RBV-602-01	
D902	8-719-912-20	DIODE	1SS120	
D903	8-719-912-20	DIODE	1SS120	
D904	8-719-200-82	DIODE	11ES2	
D905	8-719-200-82	DIODE	11ES2	
D906	8-719-200-82	DIODE	11ES2	
D907	8-719-200-82	DIODE	11ES2	
D908	8-719-200-82	DIODE	11ES2	
D909	8-719-200-82	DIODE	11ES2	
D910	8-719-912-20	DIODE	1SS120	
D911	8-719-933-36	DIODE	HZS6B1L	
D919	8-719-912-20	DIODE	1SS120	
D920	8-719-912-20	DIODE	1SS120	
		< IC >		
IC1	8-749-922-41	IC	GP1F34R	
IC2	8-749-922-41	IC	GP1F34R	
IC3	8-749-922-39	IC	GP1F34T	
IC651	8-759-634-50	IC	M5218AL	
IC901	8-759-602-66	IC	M5230L-A	
IC902	8-759-231-53	IC	M5F7805	
ICP903	1-532-846-21	LI	NK, IC 5A	
ICP904	1-532-846-21	LI	NK, IC 5A	
		< JACK >		
J2	1-569-662-11	JACK, PIN 1P (SUPER WOOFER)		
J651	1-562-837-21	JACK (HEADPHONES)		
J901	1-526-931-11	INLET, AC (AC IN)		
		< COIL >		
L901	⚠1-424-485-11	FILTER, LINE		
		< TRANSISTOR >		
Q651	8-729-141-30	TRANSISTOR	2SC3623A-LK	
Q652	8-729-900-61	TRANSISTOR	DTA114ES	
Q661	8-729-141-30	TRANSISTOR	2SC3623A-LK	
Q901	8-729-209-15	TRANSISTOR	2SD2012	
Q902	8-729-111-67	TRANSISTOR	2SB1094-L	

The components identified by mark ⚠ or dotted line with mark ⚠ are critical for safety.
Replace only with part number specified.

POWER SUPPLY | JACK | POWER AMP | VOLUME | SPEAKER | FLD | CONNECTOR | ELECT CAP | TRANSFORMER (A),(B)

Ref. No.	Part No.	Description					Remarks
Q903	8-729-900-80	TRANSISTOR	DTC114ES				
Q904	8-729-209-15	TRANSISTOR	2SD2012				
Q905	8-729-620-05	TRANSISTOR	2SC2603-EF				
Q906	8-729-620-05	TRANSISTOR	2SC2603-EF				
Q908	8-729-801-84	TRANSISTOR	2SB1013-4				
Q909	8-729-111-29	TRANSISTOR	2SD1616A-K				
Q910	8-729-111-29	TRANSISTOR	2SD1616A-K				
Q911	8-729-620-05	TRANSISTOR	2SC2603-EF				
		< RESISTOR >					
R651	1-249-433-11	CARBON	22K	5%	1/4W		
R652	1-249-439-11	CARBON	68K	5%	1/4W		
R653	1-249-400-11	CARBON	39	5%	1/4W		
R654	1-249-423-11	CARBON	3.3K	5%	1/4W		
R655	1-249-423-11	CARBON	3.3K	5%	1/4W		
R656	1-249-405-11	CARBON	100	5%	1/4W		
R657	1-249-441-11	CARBON	100K	5%	1/4W		
R661	1-249-433-11	CARBON	22K	5%	1/4W		
R662	1-249-439-11	CARBON	68K	5%	1/4W		
R663	1-249-400-11	CARBON	39	5%	1/4W		
R664	1-249-423-11	CARBON	3.3K	5%	1/4W		
R665	1-249-423-11	CARBON	3.3K	5%	1/4W		
R666	1-249-405-11	CARBON	100	5%	1/4W		
R902	1-247-903-00	CARBON	1M	5%	1/4W		
R905	1-249-413-11	CARBON	470	5%	1/4W		
R906	1-249-434-11	CARBON	27K	5%	1/4W		
R907	1-249-425-11	CARBON	4.7K	5%	1/4W		
R908	1-249-431-11	CARBON	15K	5%	1/4W		
R909	1-249-431-11	CARBON	15K	5%	1/4W		
R910	1-249-419-11	CARBON	1.5K	5%	1/4W		
R911	1-249-429-11	CARBON	10K	5%	1/4W		
R912	1-249-429-11	CARBON	10K	5%	1/4W		
R913	1-249-429-11	CARBON	10K	5%	1/4W		
R914	1-249-429-11	CARBON	10K	5%	1/4W		
R919	1-249-429-11	CARBON	10K	5%	1/4W		
R920	1-249-429-11	CARBON	10K	5%	1/4W		
R921	⚠1-216-428-00	METAL OXIDE	180	5%	1W		F
R922	1-249-429-11	CARBON	10K	5%	1/4W		
R923	1-249-425-11	CARBON	4.7K	5%	1/4W		
R924	1-249-429-11	CARBON	10K	5%	1/4W		
R925	1-249-429-11	CARBON	10K	5%	1/4W		
R926	1-249-429-11	CARBON	10K	5%	1/4W		
R928	1-247-742-11	CARBON	180	5%	1/2W		
R930	1-249-423-11	CARBON	3.3K	5%	1/4W		
R931	1-249-441-11	CARBON	100K	5%	1/4W		
R932	1-249-429-11	CARBON	10K	5%	1/4W		
		< RELAY >					
RY801	1-515-790-11	RELAY					
RY802	1-515-790-11	RELAY					
RY901	1-515-626-11	RELAY					

****

*	A-4341-620-A	POWER AMP BOARD, COMPLETE (AEP, UK)				
*	A-4341-624-A	POWER AMP BOARD, COMPLETE (G, IT)				
		**********				
*	1-638-906-12	VOLUME BOARD				
		**********				
*	1-638-907-12	SPEAKER BOARD				
		**********				
*	1-638-908-13	FLD BOARD				
		*********				
*	1-638-909-12	CONNECTOR BOARD				
		**********				
*	1-638-910-12	ELECT CAP BOARD				
		**********				
*	1-638-911-12	TRANSFORMER (A) BOARD				
		**********				
*	1-638-912-12	TRANSFORMER (B) BOARD				
		**********				
*	3-309-144-21	HEAT SINK				
	7-682-547-04	SCREW +BVTT 3X6 (S)				
		< CAPACITOR >				
C401	1-126-948-11	ELECT	100uF	20%	3V	
C402	1-130-955-00	FILM	0.01uF	5%	100V	
C403	1-126-948-11	ELECT	100uF	20%	3V	
C404	1-130-477-00	MYLAR	0.0033uF	5%	50V	
C405	1-126-948-11	ELECT	100uF	20%	3V	
C406	1-124-931-11	ELECT	47uF	47%	100V	
C421	1-136-955-00	FILM	0.01uF	5%	100V	
C601	1-162-306-11	CERAMIC	0.01uF	20%	1V	
C602	1-126-933-11	ELECT	100uF	20%	1V	
C603	1-124-915-11	ELECT	10uF	20%	6V	
C604	1-124-915-11	ELECT	10uF	20%	6V	
C701	1-126-176-11	ELECT	220uF	20%	1V	
C702	1-126-176-11	ELECT	220uF	20%	1V	
C704	1-162-306-11	CERAMIC	0.01uF	20%	1V	
C705	1-161-494-00	CERAMIC	0.022uF		2V	

The components identified by mark ⚠ or dotted line with mark ⚠ are critical for safety.
Replace only with part number specified.

POWE AMP | VOLUME | SPEAKER | FLD | CONNECTOR

ELECT CAP | TRANSFORMER (A),(B)

Ref. No.	Part No.	Description				Remarks
C706	1-124-927-11	ELECT	4.7uF	20%	100V	
C707	1-126-101-11	ELECT	100uF	20%	16V	
C708	1-124-907-11	ELECT	10uF	20%	50V	
C709	1-164-159-11	CERAMIC	0.1uF		50V	
C710	1-124-910-11	ELECT	47uF	20%	50V	
C711	1-164-159-11	CERAMIC	0.1uF		50V	
C801	1-124-907-11	ELECT	10uF	20%	50V	
C802	1-162-294-31	CERAMIC	0.001uF	10%	50V	
C803	1-162-282-31	CERAMIC	100PF	10%	50V	
C804	1-124-927-11	ELECT	4.7uF	20%	100V	
C806	1-136-165-00	FILM	0.1uF	5%	50V	
C807	1-136-165-00	FILM	0.1uF	5%	50V	
C808	1-136-165-00	FILM	0.1uF	5%	50V	
C809	1-136-165-00	FILM	0.1uF	5%	50V	
C821	1-124-907-11	ELECT	10uF	20%	50V	
C822	1-162-294-31	CERAMIC	0.001uF	10%	50V	
C823	1-162-282-31	CERAMIC	100PF	10%	50V	
C824	1-124-927-11	ELECT	4.7uF	20%	100V	
C828	1-136-165-00	FILM	0.1uF	5%	50V	
C829	1-136-165-00	FILM	0.1uF	5%	50V	
C831	1-162-306-11	CERAMIC	0.01uF	20%	16V	
C851	1-124-907-11	ELECT	10uF	20%	50V	
C852	1-162-294-31	CERAMIC	0.001uF	10%	50V	
C853	1-162-282-31	CERAMIC	100PF	10%	50V	
C854	1-124-927-11	ELECT	4.7uF	20%	100V	
C856	1-136-165-00	FILM	0.1uF	5%	50V	
C857	1-136-165-00	FILM	0.1uF	5%	50V	
C858	1-136-165-00	FILM	0.1uF	5%	50V	
C859	1-136-165-00	FILM	0.1uF	5%	50V	
C871	1-124-907-11	ELECT	10uF	20%	50V	
C872	1-162-294-31	CERAMIC	0.001uF	10%	50V	
C873	1-162-282-31	CERAMIC	100PF	10%	50V	
C874	1-124-927-11	ELECT	4.7uF	20%	100V	
C878	1-136-165-00	FILM	0.1uF	5%	50V	
C879	1-136-165-00	FILM	0.1uF	5%	50V	
C891	1-136-153-00	FILM	0.01uF	5%	50V (G, IT)	
C892	1-136-153-00	FILM	0.01uF	5%	50V (G, IT)	
C893	1-136-153-00	FILM	0.01uF	5%	50V (G, IT)	
C894	1-136-153-00	FILM	0.01uF	5%	50V (G, IT)	
C901	1-128-329-11	ELECT	10000uF	20%	42V	
C902	1-128-329-11	ELECT	10000uF	20%	42V	
C905	1-136-171-00	FILM	0.33uF	5%	50V	
C906	1-136-171-00	FILM	0.33uF	5%	50V	
C921	1-126-948-11	ELECT	100uF	20%	35V	
C923	1-126-949-11	ELECT	220uF	20%	35V	
C924	1-126-949-11	ELECT	220uF	20%	35V	
C925	1-126-948-11	ELECT	100uF	20%	35V	
C926	1-164-159-11	CERAMIC	0.1uF		50V	
C927	1-124-915-11	ELECT	10uF	20%	63V	
C928	1-124-915-11	ELECT	10uF	20%	63V	
C929	1-124-557-11	ELECT	1000uF	20%	25V	
C930	1-124-557-11	ELECT	1000uF	20%	25V	

< CONNECTOR >

CN601		1-560-942-00	PIN, CONNECTOR 6P
CN801	*	1-564-521-11	PLUG, CONNECTOR 6P
CN802	*	1-573-087-11	PIN, CONNECTOR 13P
CN891		1-563-311-11	CONNECTOR, BOARD TO BOARD 10P
CN892	*	1-564-518-11	PLUG, CONNECTOR 3P
CNJ603		1-569-656-11	HOUSING, CONNECTOR 8P
CNJ604		1-573-147-11	HOUSING, CONNECTOR 12P
CNJ902		1-573-095-11	SOCKET, CONNECTOR 15P
CNJ911	*	1-573-094-11	SOCKET, CONNECTOR 13P
CNJ912	*	1-573-094-11	SOCKET, CONNECTOR 13P
CNP7	*	1-564-499-11	PIN, CONNECTOR 6P
CNP602		1-568-319-11	SOCKET, CONNECTOR 8P
CNP901	*	1-564-321-00	PIN, CONNECTOR 2P
CNP912	*	1-564-338-00	PIN, CONNECTOR 4P
CNP913	*	1-564-337-00	PIN, CONNECTOR 3P
CNP914	*	1-564-339-00	PIN, CONNECTOR 5P
CNP915	*	1-564-505-11	PLUG, CONNECTOR 2P

< DIODE >

D401	8-719-815-85	DIODE	1S1585
D402	8-719-933-67	DIODE	HZS11B2L
D403	8-719-933-47	DIODE	HZS7B2L
D404	8-719-815-85	DIODE	1S1585
D405	8-719-815-85	DIODE	1S1585
D406	8-719-200-82	DIODE	11ES2
D409	8-719-934-22	LED	HZS30-2L
D701	8-719-912-20	DIODE	1SS120
D702	8-719-912-20	DIODE	1SS120
D703	8-719-912-20	DIODE	1SS120
D704	8-719-912-20	DIODE	1SS120
D705	8-719-912-20	DIODE	1SS120
D706	8-719-912-20	DIODE	1SS120
D801	8-719-912-20	DIODE	1SS120
D802	8-719-912-20	DIODE	1SS120

POWE AMP | VOLUME | SPEAKER | FLD | CONNECTOR | ELECT CAP | TRANSFORMER (A),(B)

Ref. No.	Part No.	Description	Remarks
D821	8-719-912-20	DIODE 1SS120	
D822	8-719-912-20	DIODE 1SS120	
D851	8-719-912-20	DIODE 1SS120	
D852	8-719-912-20	DIODE 1SS120	
D871	8-719-912-20	DIODE 1SS120	
D872	8-719-912-20	DIODE 1SS120	
D912	8-719-200-82	DIODE 11ES2	
D913	8-719-200-82	DIODE 11ES2	
D914	8-719-934-22	DIODE HZS30-2L	
D915	8-719-200-82	DIODE 11ES2	
D916	8-719-200-82	DIODE 11ES2	
D917	8-719-934-22	DIODE HZS30-2L	
D918	8-719-014-88	DIODE UZP-6.8BC	
D921	8-719-200-82	DIODE 11ES2	
D922	8-719-200-82	DIODE 11ES2	
D923	8-719-200-82	DIODE 11ES2	
D924	8-719-200-82	DIODE 11ES2	
		< IC >	
IC601	8-759-820-62	IC LB1639	
IC701	8-759-111-68	IC uPC1237HA	
IC702	8-759-987-16	IC LM393P	
IC703	8-759-512-73	IC LM35DZ-SL	
IC801	8-759-323-30	IC LM3875-2	
IC821	8-759-323-30	IC LM3875-2	
IC851	8-759-323-30	IC LM3875-2	
IC871	8-759-323-30	IC LM3875-2	
ICP901	⚠1-532-845-21	LI NK, IC 4A	
ICP902	⚠1-532-845-21	LI NK, IC 4A	
ICP905	⚠1-532-842-11	LI NK, IC 2A	
ICP906	⚠1-532-842-11	LI NK, IC 2A	
		< JACK >	
J891	1-537-336-11	TERMINAL BOARD (SP) (TO SATELLITE/BASS UNIT SPEAKER)	
		< COIL >	
L401	1-410-761-11	INDUCTOR 0.68mH	
L402	1-410-521-11	MICRO INDUCTOR	
L801	* 1-420-872-00	COIL, AIR CORE	
L821	* 1-420-872-00	COIL, AIR CORE	
L851	* 1-420-872-00	COIL, AIR CORE	
L871	* 1-420-872-00	COIL, AIR CORE	

The components identified by mark ⚠ or dotted line with mark ⚠ are critical for safety.
Replace only with part number specified.

Ref. No.	Part No.	Description	Remarks
		< TRANSISTOR >	
Q401	8-729-141-46	TRANSISTOR 2SC4431-LK	
Q402	8-729-141-46	TRANSISTOR 2SC4431-LK	
Q403	8-729-142-01	TRANSISTOR 2SC1941-LK	
Q404	8-729-141-46	TRANSISTOR 2SC4431-LK	
Q601	8-729-801-93	TRANSISTOR 2SD1387-3	
Q701	8-729-119-76	TRANSISTOR 2SA1175-HFE	
Q801	8-729-140-84	TRANSISTOR 2SC1841-PAFAEA	
Q821	8-729-140-84	TRANSISTOR 2SC1841-PAFAEA	
Q851	8-729-140-84	TRANSISTOR 2SC1841-PAFAEA	
Q871	8-729-140-84	TRANSISTOR 2SC1841-PAFAEA	
Q911	8-729-209-15	TRANSISTOR 2SD2012	
Q912	8-729-111-67	TRANSISTOR 2SA473	
		< RESISTOR >	
R401	1-249-437-11	CARBON 47K 5% 1/4W	
R402	1-249-437-11	CARBON 47K 5% 1/4W	
R404	⚠1-213-056-11	FUSIBLE 6.8 5% 1W	F
R405	1-249-441-11	CARBON 100K 5% 1/4W	
R406	1-249-437-11	CARBON 47K 5% 1/4W	
R407	1-249-405-11	CARBON 100 5% 1/4W	
R408	1-247-756-11	CARBON 2.2K 5% 1/2W	
R409	1-249-437-11	CARBON 47K 5% 1/4W	
R411	⚠1-213-056-11	FUSIBLE 6.8 5% 1W	F
R601	⚠1-212-849-00	FUSIBLE 4.7 5% 1/4W	F
R602	1-249-419-11	CARBON 1.5K 5% 1/4W	
R603	1-249-422-11	CARBON 2.7K 5% 1/4W	
R604	1-249-429-11	CARBON 10K 5% 1/4W	
R605	1-249-429-11	CARBON 10K 5% 1/4W	
R606	1-249-416-11	CARBON 820 5% 1/4W	
R701	1-249-433-11	CARBON 22K 5% 1/4W	
R702	1-249-441-11	CARBON 100K 5% 1/4W	
R703	1-249-433-11	CARBON 22K 5% 1/4W	
R704	1-249-433-11	CARBON 22K 5% 1/4W	
R705	1-249-429-11	CARBON 10K 5% 1/4W	
R706	1-249-441-11	CARBON 100K 5% 1/4W	(AEP, UK)
R707	1-249-429-11	CARBON 10K 5% 1/4W	
R708	1-249-424-11	CARBON 3.9K 5% 1/4W	
R709	1-249-427-11	CARBON 6.8K 5% 1/4W	
R710	1-249-429-11	CARBON 10K 5% 1/4W	
R711	1-249-417-11	CARBON 1K 5% 1/4W	
R712	1-249-437-11	CARBON 47K 5% 1/4W	(AEP, UK)
R802	1-249-437-11	CARBON 47K 5% 1/4W	
R803	1-249-420-11	CARBON 1.8K 5% 1/4W	
R804	1-249-437-11	CARBON 47K 5% 1/4W	

POWE AMP | VOLUME | SPEAKER | FLD | CONNECTOR

ELECT CAP | TRANSFORMER (A),(B)

Ref. No.	Part No.	Description				Remarks
R805	⚠1-217-151-00	RES, METAL PLATE 0.22			2W	F
R806	1-249-417-11	CARBON	1K	5%	1/4W	
R807	1-249-431-11	CARBON	15K	5%	1/4W	
R808	1-249-441-11	CARBON	100K	5%	1/4W	
R809	⚠1-212-958-00	FUSIBLE	10	5%	1/2W	F
R810	1-249-439-11	CARBON	68K	5%	1/4W	
R811	1-249-429-11	CARBON	10K	5%	1/4W	
R821	1-249-417-11	CARBON	1K	5%	1/4W	
R822	1-249-437-11	CARBON	47K	5%	1/4W	
R823	1-249-420-11	CARBON	1.8K	5%	1/4W	
R824	1-249-438-11	CARBON	56K	5%	1/4W	
R825	⚠1-217-151-00	RES, METAL PLATE 0.22			2W	F
R826	1-249-417-11	CARBON	1K	5%	1/4W	
R827	1-249-431-11	CARBON	15K	5%	1/4W	
R828	1-249-441-11	CARBON	100K	5%	1/4W	
R829	⚠1-212-958-00	FUSIBLE	10	5%	1/2W	F
R830	1-249-437-11	CARBON	47K	5%	1/4W	
R831	1-249-429-11	CARBON	10K	5%	1/4W	
R851	1-249-417-11	CARBON	1K	5%	1/4W	
R852	1-249-437-11	CARBON	47K	5%	1/4W	
R853	1-249-420-11	CARBON	1.8K	5%	1/4W	
R854	1-249-437-11	CARBON	47K	5%	1/4W	
R855	⚠1-217-151-00	RES, METAL PLATE 0.22			2W	F
R856	1-249-417-11	CARBON	1K	5%	1/4W	
R857	1-249-431-11	CARBON	15K	5%	1/4W	
R858	1-249-441-11	CARBON	100K	5%	1/4W	
R859	⚠1-212-958-00	FUSIBLE	10	5%	1/2W	F
R860	1-249-438-11	CARBON	56K	5%	1/4W	
R861	1-249-429-11	CARBON	10K	5%	1/4W	
R871	1-249-417-11	CARBON	1K	5%	1/4W	
R872	1-249-437-11	CARBON	47K	5%	1/4W	
R873	1-249-420-11	CARBON	1.8K	5%	1/4W	
R874	1-249-438-11	CARBON	56K	5%	1/4W	
R875	⚠1-217-151-00	RES, METAL PLATE 0.22			2W	F
R876	1-249-417-11	CARBON	1K	5%	1/4W	
R877	1-249-431-11	CARBON	15K	5%	1/4W	
R878	1-249-441-11	CARBON	100K	5%	1/4W	
R879	⚠1-212-958-00	FUSIBLE	10	5%	1/2W	F
R880	1-249-436-11	CARBON	39K	5%	1/4W	
R881	1-249-429-11	CARBON	10K	5%	1/4W	

The components identified by mark ⚠ or dotted line with mark ⚠ are critical for safety.
Replace only with part number specified.

Ref. No.	Part No.	Description				Remarks
R916	⚠1-249-429-11	CARBON	1K	5%	1/2W	F
R917	⚠1-247-752-11	CARBON	1K	5%	1/2W	F
R891	1-247-727-11	CARBON	10	5%	1/2W	(G, IT)
R892	1-247-727-11	CARBON	10	5%	1/2W	(G, IT)
R893	1-247-727-11	CARBON	10	5%	1/2W	(G, IT)
R894	1-247-727-11	CARBON	10	5%	1/2W	(G, IT)
R918	1-249-441-11	CARBON	100K	5%	1/4W	

< VARIABLE RESISTOR >

RV601	1-241-418-11	RES, VAR, CARBON 10K (VOLUME)

< TRANSFORMER >

T401	1-450-460-11	TRANSFORMER, DC-DC CONVERTER
T402	1-450-461-11	TRANSFORMER, DC-DC CONVERTER

****

MISCELLANEOUS
****

11	1-541-860-11	MOTOR, DC FAN
F901	⚠1-532-286-00	FUSE (T2.5A)
FL501	1-519-654-11	INDICATOR TUBE, FLUORESCENT
PT101	⚠1-450-355-11	TRANSFORMER, POWER (UK)
PT101	⚠1-450-356-11	TRANSFORMER, POWER (AEP, G, IT)

****

ACCESSORIES & PACKING MATERIALS
****

*	4-945-075-01	CUSHION (RIGHT)
*	4-945-076-01	CUSHION (LEFT)

****

HARDWARE LIST

****

#2	7-685-203-19	SCREW +KTP 2X5 TYPE2 NON-SLIT
#3	7-685-132-19	SCREW +BTP 2.6X5 TYPE2 N-S
#6	7-685-647-79	SCREW +BVTP 3X10 TYPE2 N-S
#7	7-685-870-09	SCREW +BVTT 3X5 (S)
#8	7-682-547-04	SCREW +BVTT 3X6 (S)
#9	7-685-645-79	SCREW +BVTP 3X6 TYPE2 IT-3

English
91I1659-1

Sony Corporation
Audio Group

9-956-560-11
Printed by: Schaltungsdienst Lange, Berlin (GERMANY)

Published by Customer Relations and Service Group