PIONEER®
The future of sound and vision.

Service Manual

• KEH-6000RDS

ORDER NO.
CRT1275

CASSETTE CAR STEREO WITH FM/MW/LW ELECTRONIC TUNER

KEH-4000RDS EW, X1B

Note
- **See the separate manual CX-166 (CRT1094) for the cassette mechanism description.**

CONTENTS

1. SPECIFICATIONS 2
2. USING THE RADIO 3
3. USING THE RDS FUNCTION 4
4. USING THE TAPE DECK 6
5. CONNECTIONS 7
6. DISASSEMBLY 9
7. ADJUSTMENT 12
8. BLOCK DIAGRAM 15
9. CONNECTION DIAGRAM (KEH-6000RDS) 26
10. SCHEMATIC CIRCUIT DIAGRAM (KEH-6000RDS) 29
11. SCHEMATIC CIRCUIT DIAGRAM (KEH-4000RDS) 32
12. CONNECTION DIAGRAM (KEH-4000RDS) 35
13. CIRCUIT DIAGRAM AND P.C. BOARDS PATTERN 38
14. EXPLODED VIEW 40
15. CASSETTE MECHANISM ASSY EXPLODED VIEW 44
16. PACKING METHOD 47
17. ELECTRICAL PARTS LIST 49

www.manualscenter.com

- **Dolby and the double-D symbol are trademarks of Dolby Laboratories Licensing Corporation.**
- **Noise Reduction System manufactured under license from Dolby Laboratories Licensing Corporation.**

PIONEER ELECTRONIC CORPORATION 4-1, Meguro 1-Chome, Meguro-ku, Tokyo 153, Japan
PIONEER ELECTRONICS SERVICE INC. P.O. Box 1760, Long Beach, California 90801 U.S.A.
PIONEER ELECTRONICS OF CANADA, INC. 505 Cochrane Drive, Markham, Ontario L3R 8E3 Canada
PIONEER ELECTRONIC [EUROPE] N.V. Keetberglaan 1, 2740 Beveren, Belgium
PIONEER ELECTRONICS AUSTRALIA PTY. LTD. 178-184 Boundary Road, Braeside, Victoria 3195, Australia TEL: [03] 580-9911

© PIONEER ELECTRONIC CORPORATION 1990

FK JAN. 1990 Printed in Japan

SAFETY INFORMATION

WARNING!

Lithium batteries. Danger of explosion. Replacement must be done by qualified personnel and only by following the instructions given in the service manual.

This warning is stated on the product or in the operating instructions. When replacing the lithium batteries, follow the note below.
Dispose of the used battery promptly. Keep away from children. Do not disassemble and do not dispose of in fire.
The battery used in this device may present a fire or chemical hazard if mistreated. Do not recharge, disassemble, heat above 100°C or incinerate. Replace only with the same Part Number. Use of another battery may present a risk of fire or explosion.

Note: The lithium battery installation position is shown in the exploded view and the P.C. board pattern.

ADVARSEL!

Lithiumbatteri — Eksplosionsfare ved fejlagtig håndtering. Udskiftning må kun ske med batteri af samme fabrikat og type. Levér det brugte batteri tilbage til leverandøren.

Denne advarsel or angivet på produktet eller i brugsvejledningen. Ved udskiftning af lithium batterierne følges nedenstående anveisning.
Batterierne må kun udskiftes med batterier af samme type og mærke.

VARNING

Explosionsfara vid felaktigt batteribyte. Använd samma batterityp eller en ekvivalent typ som rekommenderas av apparattillverkaren. Kassera använt batteri enligt fabrikantens instruktion.

Denna varning finns på apparaten eller i bruksanvisningen. Följ nedanstående anvisningar vid byte av litiumbatterier.
Batterierna får endast bytas ut mot litiumbatterier av samma typ och fabrikat.

www.manualscenter.com

1. SPECIFICATIONS

General
Power source ..... 14.4 V DC (10.8 – 15.6 V allowable)
Grounding system ..... Negative type
Max. current consumption ..... 7.0 A
Dimensions (chassis) ..... 180(W) × 50(H) × 150(D) mm
(front face) ..... 188(W) × 58(H) × 13(D) mm
Weight ..... 1.4 kg

Amplifier
Maximum power output ..... 25 W × 2/15 W × 4 (EIAJ)
Continuous power output ..... 11 W × 2 (1% dist. at 1 kHz)
Load impedance ..... 4Ω (4 – 8 Ω allowable)
Max. output level/output impedance (pre out)
(KEH-6000RDS) ..... 250 mV/1 kΩ
Tone controls (bass) ..... ±10 dB (100 Hz)
(treble) ..... ±10 dB (10 kHz)
Loudness contour ..... +12 dB (100 Hz), +7 dB (10 kHz)
(volume: –30 dB)

Tape player
Tape ..... Compact cassette tape (C-30 – C-90)
Tape speed ..... 4.76 cm/sec. (+0.14 cm/sec., −0.05 cm/sec.)
Fast forward/rewind time ..... Approx. 100 sec. for C-60
Wow & flutter ..... 0.13% (WRMS)
Frequency response ..... Metal: 40 – 17,000 Hz (±3 dB)
Stereo separation ..... 45 dB
Signal-to-noise ratio ..... Metal: Dolby B NR IN: 66 dB (IEC-A network)
Dolby NR OUT: 60 dB (IEC-A network)

FM tuner
Frequency range ..... 87.5 – 108 MHz
Usable sensitivity ..... 11 dBf (1.0 µV/75 Ω, mono, S/N: 30 dB)
50 dB quieting sensitivity ..... 16 dBf (1.7 µV/75 Ω, mono)
Signal-to-noise ratio ..... 70 dB (IEC-A network)
Distortion ..... 0.3% (at 65 dBf, 1 kHz, stereo)
Frequency response ..... 30 – 15.000 Hz (±3 dB)
Stereo separation ..... 40 dB (at 65 dBf, 1 kHz)

MW tuner
Frequency range ..... 531 – 1,602 kHz
Usable sensitivity ..... 18 µV (25 dB) (S/N: 20 dB)
Selectivity ..... 50 dB (± 9 kHz)

LW tuner
Frequency range ..... 153 – 281 kHz
Usable sensitivity ..... 30 µV (30 dB) (S/N: 20 dB)
Selectivity ..... 50 dB (±9 kHz)

Note:
Specifications and the design are subject to possible modification without notice due to improvements.

2. USING THE RADIO

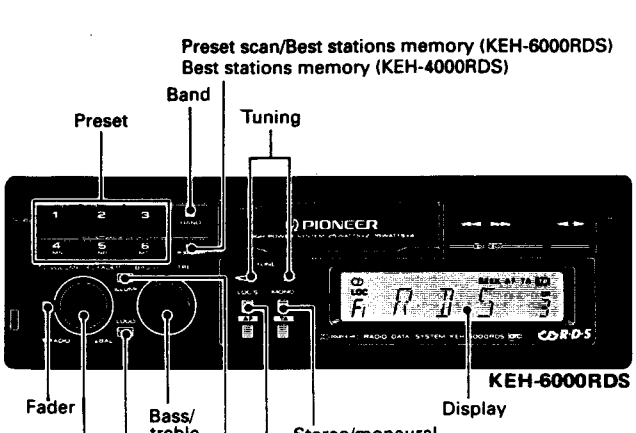

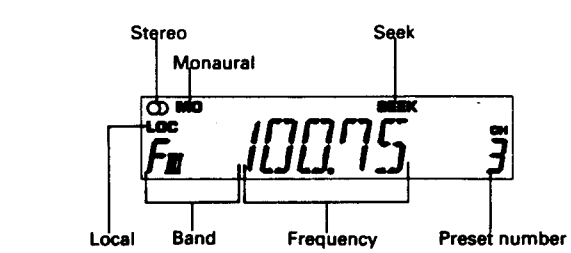

- **Before attempting operation...**
- Reduce the volume by turning the volume control knob to the left.
- Set the fader control to the left horizontal.

1. Press the radio switch to turn on power and display the frequency.
2. Press the band switch to select the band.
   - Switching between FM and MW/LW is controlled by the band switch. Switching between LW and MW is accomplished using the tuning button. The MW band is from 531 kHz to 1,602 kHz, and the LW band is from 153 kHz to 281 kHz.
3. Press both ends of tuning button and the seek tuning indicator will appear on the display.
4. Press either the left or right side of the tuning button to tune in the desired frequency. (Pressing the right side will increase the frequency.)
5. Adjust the volume and balance. To adjust the balance, first pull the knob until a click is heard. After setting to the desired level, push the knob in again to its original position.
6. Adjust the tone to an appropriate level. To adjust the treble, pull the knob toward you and set it to the desired level.

- **To enter a frequency into the preset memory...**

7. Hold down one of the preset buttons (1-6) for approximately two seconds. The frequency is stored in memory (assigned to the preset button pressed) once the preset number stops flashing on the display.
   Six FM1 frequencies, six FM2 frequencies, six FM3 frequencies and six MW and LW frequencies can be entered.

- **Best Stations Memory Button**

Automatically tunes strong frequencies and assigns them to preset buttons 1 through 6 for one-touch automatic tuning. The best stations memory function is activated by pressing this button for approximately 2 seconds. The best stations memory function is indicated by -- -- -- -- flashing on the display, and this function can be canceled by pressing the band switch. The frequency display returns once the best stations memory function is complete. The frequency displayed at this time is of the strongest station assigned to preset button 1 by the best stations memory function.

- 6 best (strongest) frequencies are memorized in the 6 preset buttons in the order of their strength, the strongest one being assigned to preset button 1.
- The frequencies previously assigned to the preset buttons are retained when 6 frequencies cannot be located.
- The best stations memory is in operation while -- -- -- -- is flashing on the display.

- **Stereo/Monaural Switch**

This switch is used to change from stereo to monaural for FM broadcasts, and is usually left in the stereo position. When a stereo broadcast is received, the stereo indicator will illuminate. With the "Automatic Reception Control" (ARC) function, stereo broadcasts can always be enjoyed in their optimal reception mode. If excessive noise is present, pressing this switch allows monaural reception of the broadcast.

- **Local Station Switch**

Pressing this switch increases the seek threshold level so that only relatively strong stations can be tuned in (local indicator will illuminate on the display). Local seek threshold level can be selected among four levels for FM and two levels for MW and LW.
Holding this switch down for approximately 2 seconds, and the display will show you the current local seek threshold level for about 5 seconds. While the local seek threshold level remains on the display, pressing the right side of the tuning button changes the display from L-1, L-2, L-3 to L-4. Pressing the left side of the tuning button changes the display from L-4, L-3, L-2 to L-1 (L-1 and L-2 for MW/LW). The bigger the number, the higher the seek threshold becomes and only relatively strong stations can be tuned in.

- **Fader Control**

This control is used to adjust the balance between the front and rear speakers when using a 4-speaker system. Turning the control upwards decreases the volume of the rear speakers, while turning it downwards decreases the volume of the front speakers. With 2-speaker systems, set this control to a horizontal position.

- **Loudness Switch**

When playing back a tape or listening to the radio at low volume, the low and high tones are emphasized and more clearly heard by pressing this switch.

Seek Tuning

Press both ends of tuning button and tuning to the next higher or lower broadcast on the band can be accomplished automatically by simply pressing either the right or left side of the tuning button. FM frequencies change in 50 kHz steps while those in the MW and LW bands change in 9 kHz steps.

www.manualscenter.com

Preset Scan Tuning

Pressing the preset scan button (the preset number flashes) causes previously stored frequencies to be tuned in sequentially for eight seconds each. Press again when the desired frequency is tuned in to cancel preset scan tuning.

Preset Tuning

Pressing the preset button instantly tunes in the frequency programmed in the memory for that button.

Manual Tuning

When manual tuning is employed, FM frequencies change in 50 kHz steps, LW frequencies change in 1 kHz steps, and MW frequencies change in 9 kHz steps.

1. Press both ends of tuning button and the seek tuning indicator will disappear from the display.
2. Change the frequency by pressing either the left or right side of the tuning button. Pressing the button once will change the frequency one step (see above). Continuously depressing either side of the button will successively change the frequency at the prescribed step.

Changing Illumination Color (KEH-6000RDS)

To change illumination color, press the button Illumination Color Change. Pressing allows change from green to red and vice versa.

Using Input Terminal (KEH-6000RDS)

To operate a CD player (sold separately) using this unit, connect the player to Input terminal. Before playing a CD, however, be sure that the cassette tape is ejected and the radio is turned off. "CD" appears on the display when the player is operating.

www.manualscenter.com

3. USING THE RDS FUNCTION

What is RDS?

The RDS (Radio Data system) is a digital information system developed by the EBU (European Broadcasting Union). Piggy-backed on normal FM broadcasts, RDS offers a variety of information services and automatic retuning functions for RDS-compatible car stereos.

RDS digital data includes various data, such as PI, PS, AF, TP, and TA.

PI ..... **Program Identification**
PS ..... **Program Service Name**
AF ..... **List of Alternative Frequencies**
TP ..... **Traffic Programme**
TA ..... **Traffic Announcement**

RDS function of this unit

This unit has the following functions for making use of RDS data.

- Station name display using PS.
- AF (Alternative Frequency) reception, which automatically tunes into the stronger station in the network being listened to using PI and AF.
- Automatic reception of traffic information broadcasts using TP/TA.

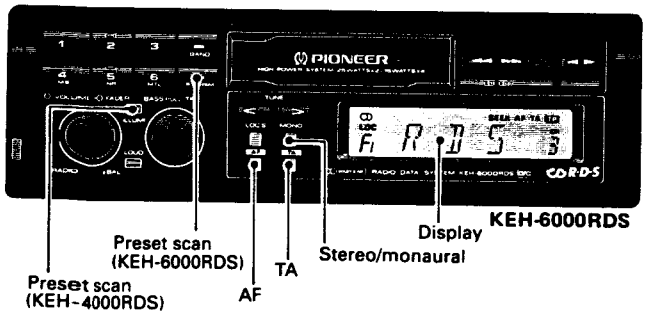

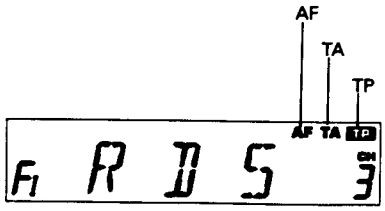

Network/station name display

Switch the radio on and choose one of the three FM bands.
When you tune into an RDS station with manual or seek tuning, the frequency display changes to the network/station name display after a few seconds by means of the PS code.

- The RDS functions of this unit use RDS codes transmitted along with FM broadcasts. RDS doesn't work on the MW or LW bands.
- The RDS functions may not work properly in areas where the RDS transmissions are at an experimental stage or where there are flaws in the broadcasting system.
- To see the frequency when the network/station name is being displayed, hold the stereo/monaural button down for at least two seconds. The frequency will then appear and will stay on for as long as the button is held down.

AF (Alternative Frequency) Reception

This unit retunes to the stronger alternative transmitter in the list of alternative frequencies (AF). Thus a motorist can keep listening to the programs in the same network.

Example:
If there are the following network broadcasting stations, the reception frequency automatically changes from 98.5 MHz to 107.5 MHz to 96.0 MHz to 102.5 MHz, but a motorist can keep listening to the programs in the same network while driving from point A to point B.

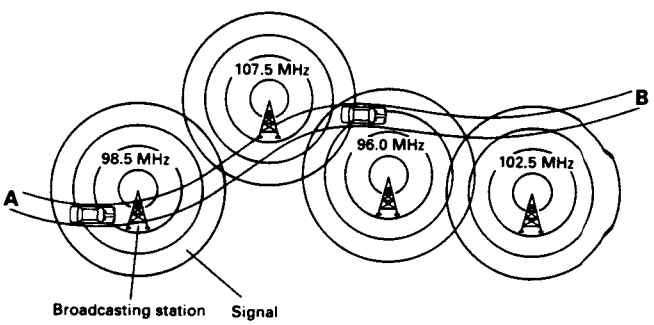

Alternative Frequency reception

To select Alternative Frequency reception, press the AF button. Once tuned to an RDS network station, as long as you drive within the area or nation served by the network, the unit will automatically retune to the strongest transmitter serving the network, using the PI and AF codes, when the tuned station gets weaker.

- When the AF button is on, only RDS stations can be tuned in with seek or preset scan tuning.
- If BSM is activated while the AF button is on, only RDS stations will be preset.
- Non-RDS stations such as those using the Swedish MBS system may be tuned in as RDS stations, but this is due to both systems sharing the same 57-kHz subcarrier frequency and is not a malfunction of the unit.
- If the tuned RDS station doesn't have AF (List of Alternative Frequencies) data or the unit cannot receive the AF data for some reason, the AF function will not work when the tuned RDS station's signal falls below a certain level. When this happens, AF flashes on the display, indicating that it isn't working.
- If the signal from the tuned RDS station falls below a certain level and AF works, it may be that the other transmitters on the same network are found to be even weaker.
  If this is the case, AF flashes on the display, indicating that it isn't working.
- If a station frequency is held in a preset memory for FM band, the AF function will also be available to the preset station (Network memory).
- If the AF button is pressed before selecting a preset station, the alternative frequency reception functions when the preset station is being recalled. Because of this, there may be a pause before the station comes on, but this is not a malfunction.
- At times, some stations in a network broadcast regional programs that are different from those of the other stations in the network. If the radio has picked up a regional program and you want to continue listening to it, hold the AF button down for more than two seconds to switch the regional function on. (REG ON will appear on the display while the button is held down.) Using the AF function, the radio tunes into those stations that are broadcasting the regional program. Hold down the AF button again for more than two seconds to cancel the regional function. (REG OFF will appear on the display while the button is held down.)

Traffic information reception

Tune to a station (TP appears on the display) to receive traffic bulletins. If you'd like to stand by for the bulletins while listening to a cassette or CD (KEH-6000RDS), tune to a TP or SK station and then press the TA button. When a traffic bulletin is broadcast, the set automatically switches from a cassette or CD to the bulletin. The volume automatically increases for the bulletin and cannot be turned down.

- Even when the radio is off, pressing the TA button while listening to a cassette or CD switches the radio on and readies it to pick up traffic bulletins, unless the radio is set to MW or LW, in which case, the radio does not go on and an alarm beeps.
- While TA is on and you are listening to a cassette or CD (TA is shown on the display), the radio starts BSA (Best TP or SK Station Auto search) 10 to 18 seconds after TP disappears from the display, tunes in the strongest TP or SK station, and stands by for a traffic bulletin. BSA doesn't work when AF is on, so turn the AF button off when you want to use BSA.
- While TA is on and you are listening to a cassette or CD, pressing the preset scan button causes the radio to start TIPS (Automatic monitoring of the several TP or SK stations) and stand by for a traffic bulletin from any one of these preset TP or SK stations in the same band as that currently being used.
- When the AF button is off, three minutes or more after TP has disappeared from the display during TIPS, the radio starts BSA.
- Don't press the TA button in an area or a country where the traffic information service is not available, as seek tuning and preset scan will not pick up any stations. An alarm sounds 30 seconds after the TA button has been pressed, warning the driver to switch it off.
- Thirty to 38 seconds after TP disappears from the display, which occurs if the signal from the TP of SK station becomes weak, an alarm sounds for ten seconds to tell you to tune to another TP or SK station.

www.manualscenter.com

4. USING THE TAPE DECK

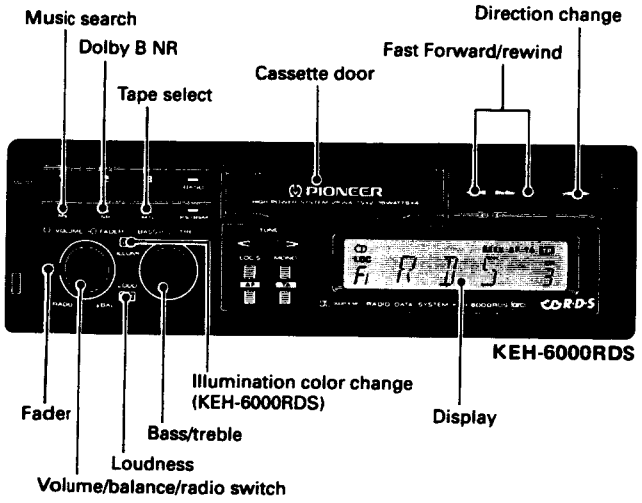

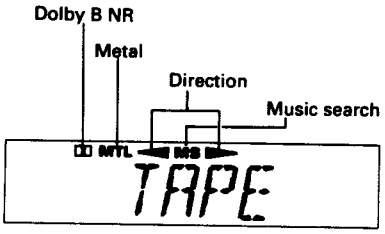

- **Before attempting operation...**
- Reduce the volume by turning the volume control knob to the left.
- Set the fader control to the left horizontal.

1. Insert a tape into the deck to turn the power on and automatically begin playback. Even if the radio is on, the unit will automatically switch to and begin tape playback.
2. Adjust the volume and balance. To adjust the balance, first pull the knob until a click is heard. After setting to the desired level, push the knob in again to its original position.
3. Adjust the tone to an appropriate level. To adjust the treble, pull the knob toward you and set it to the desired level.
4. When tape playback reaches the end of the tape, playback will automatically switch from the side being played to the opposite side (ie. Side A to Side B or vice versa) (Auto-reverse). To eject the tape during playback, simultaneously press the fast forward and rewind buttons.

- A loose or warped label on a cassette tape may interfere with the eject mechanism of the unit or cause the cassette to become jammed in the unit. Avoid using such tapes or remove such labels from the cassette before attempting use.
- Do not try to eject the cassette immediately after insertion, as it will cause malfunction. Wait a few seconds.

- **Fast Forward/Rewind**

Since the transport can be in either direction, both the left and right high-speed tape transport buttons can be regarded as fast forward/rewind buttons.
For fast forward, press the high-speed tape transport button that corresponds to the direction that is shown by the direction indicator. When the end of the tape is reached, playback will automatically begin from the opposite side of the tape (Auto-reverse).
For rewind, press the button that is opposite that of the direction shown by the direction indicator. When the end of the tape is reached, playback will automatically begin from the beginning of the same side of the tape (Auto-replay).
Fast forward and rewind can be terminated by pressing the respective opposite high-speed tape transport button.

- **Direction Change Button**

This button is used to switch from one side of the tape to the other (from Side A to Side B or vice versa).

- **Dolby B NR Switch**

Press when playing a tape recorded with Dolby NR.

- **Tape Select Switch**

This switch is used to switch to the proper mode for the tape being used and should be depressed when using chrome or metal tapes.

Music Search

- **Returning to the beginning of selection A**

Press the music search button and then the high-speed tape transport button for the direction opposite that is shown by the direction indicator. Playback will automatically start from the beginning of selection A.

- **Moving from selection A to selection B**

Press the music search button and then the high-speed tape transport button that corresponds to the direction shown by the direction indictor. Playback will automatically start from the beginning of selection B.

To enable regular fast forward/rewind operations, press the music search button again to turn the function OFF. The following errors will cause the music search function to operate improperly, even though the unit is not malfunctioning.

- Unrecorded "blank" portions between selections less than 4 seconds → the blank portion cannot be detected by the unit.
- Pauses in recorded conversations longer than 4 seconds → the unit reads these as blanks between selections.
- Portions recorded at very low volume for more than 4 seconds → the unit reads these as blanks between selections.

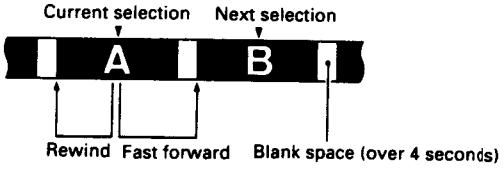

www.manualscenter.com

5. CONNECTIONS

- **KEH-6000RDS**

www.manualscenter.com

2-speaker system

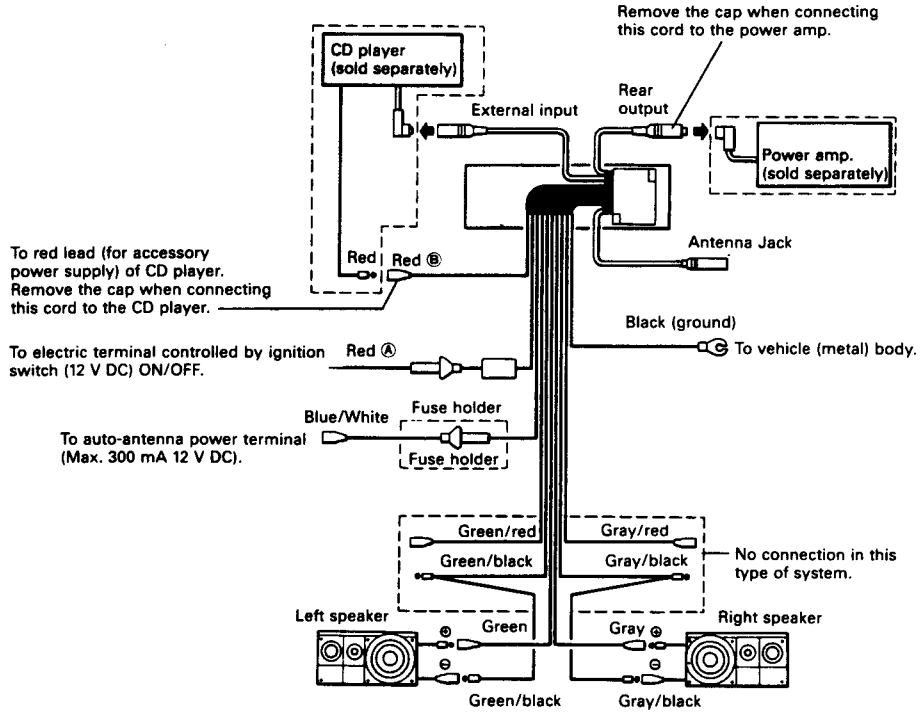

4-speaker system 1

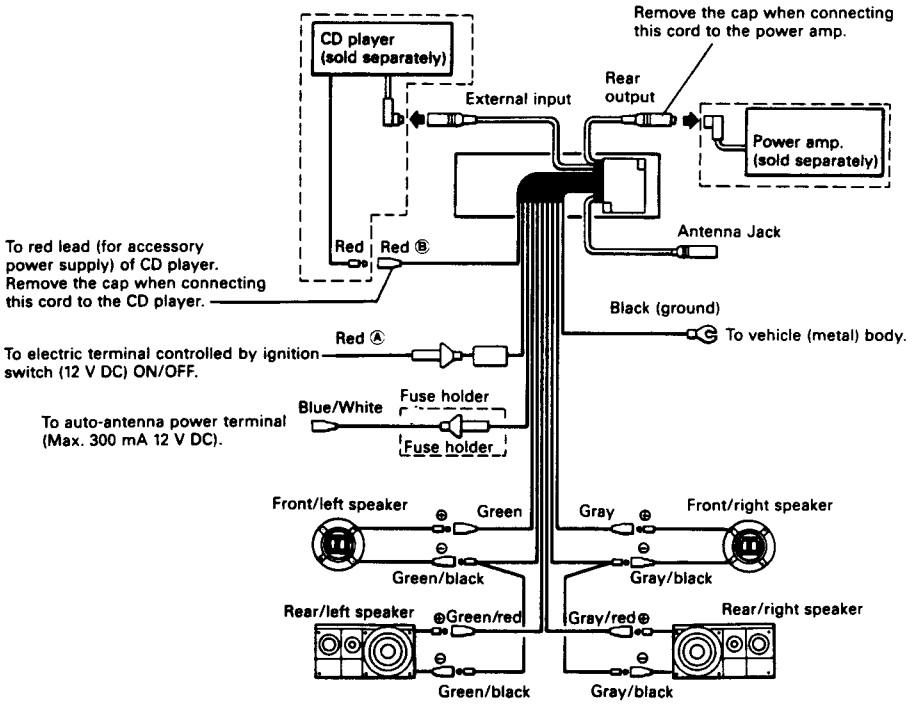

4-speaker system 2

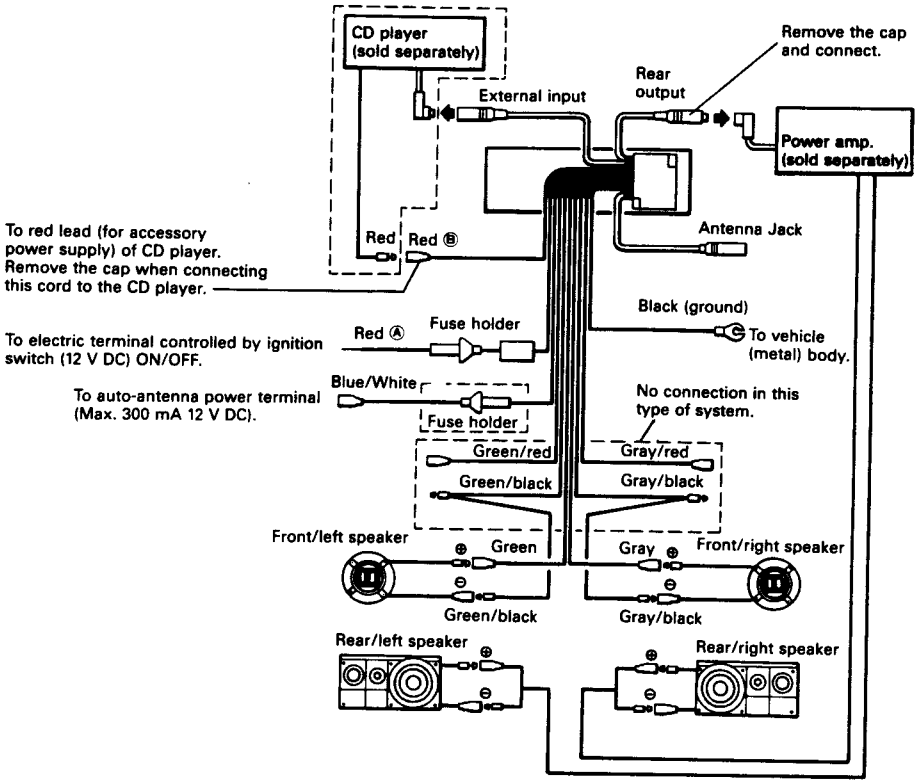

- **KEH-4000RDS**

2-speaker system

www.manualscenter.com

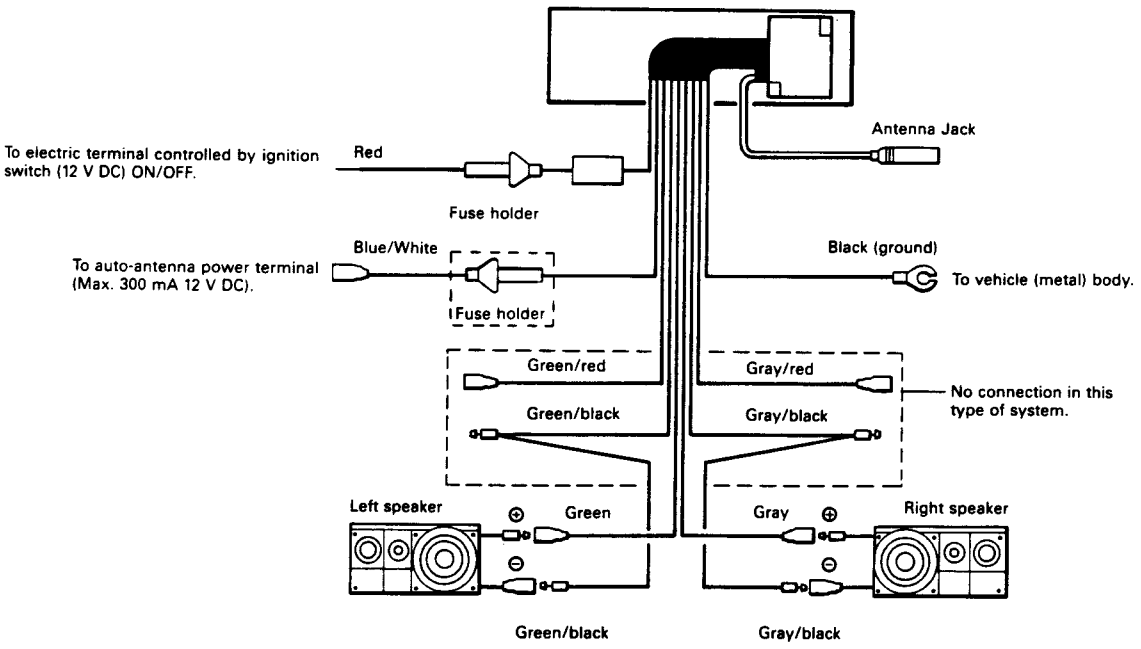

4-speaker system

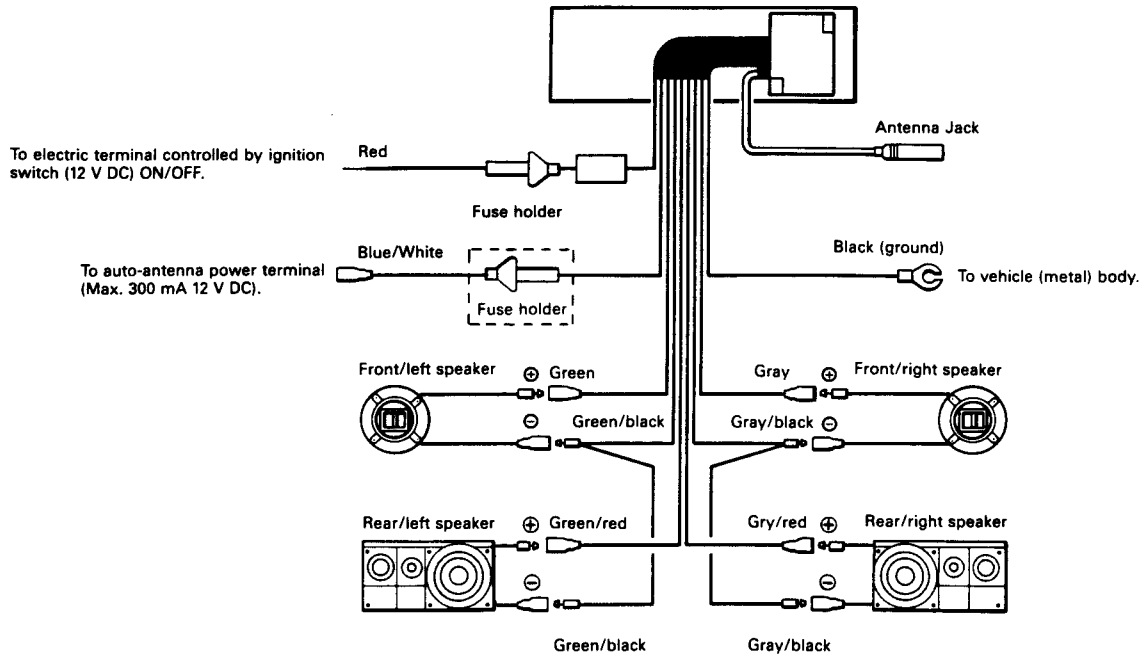

www.manualscenter.com

6. DISASSEMBLY

- **Removing the Quick Release Handle Assy**

1. Remove the two screws, and then remove the quick release handle assy.

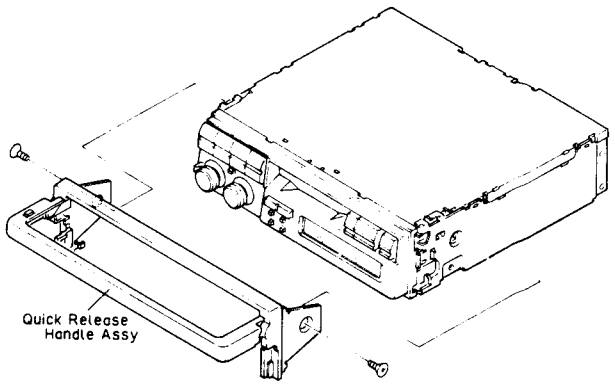

Fig. 1

• Removing the Case

1. Insert and turn a flat screwdriver to remove the case.
2. Raise the case to remove.

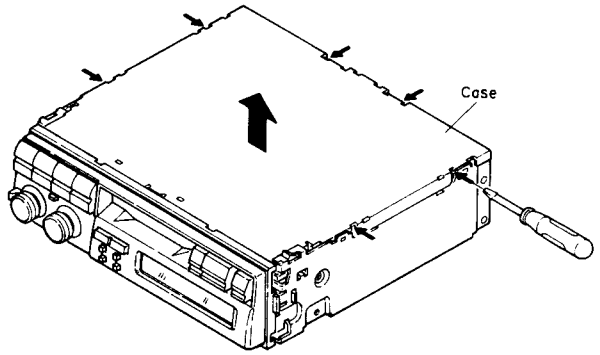

Fig. 2

• Removing the Grille Assy

1. Remove the three knobs.
2. Press the tabs at three locations, and then pull out the grille assy.
3. Disconnect the connector.

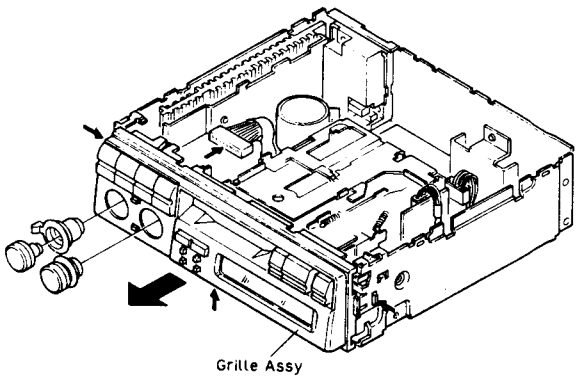

Fig. 3

• Removing the Key Board Unit

1. Remove the three screws.
2. Press the tabs at two locations indicated by arrows, and then pull out the key board Unit.

www.manualscenter.com

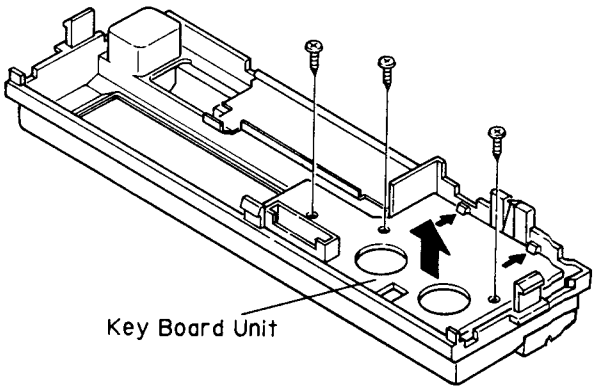

Fig. 4

• Removing the Cassette Mechanism Assy

1. Remove the four screws.
2. Disconnect the two connectors.
3. Remove the cassette mechanism assy.

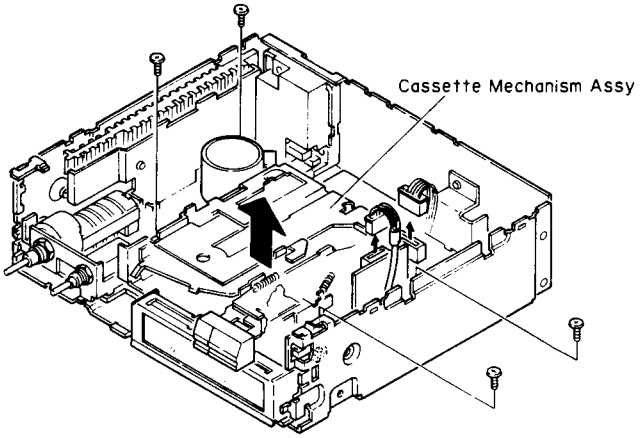

Fig. 5

www.manualscenter.com

• Removing the Tuner Amp Unit

1. Remove the two screws A, and then remove the cord assy.
2. Remove the four screws.
3. Unbend the tab at a location indicated by arrow until straight.
4. Raise up on tuner amp unit to remove it from chassis unit.

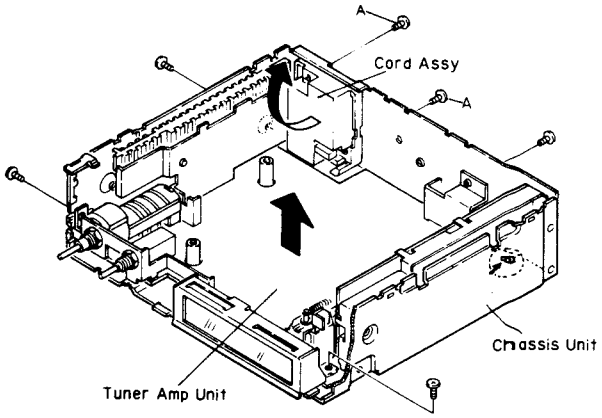

Fig. 6

7. ADJUSTMENT

NOTICE:
Select C1 so that total capacity of 80pF is attained from the direction of the receiver jack.
Z: Output impedance of SSG.

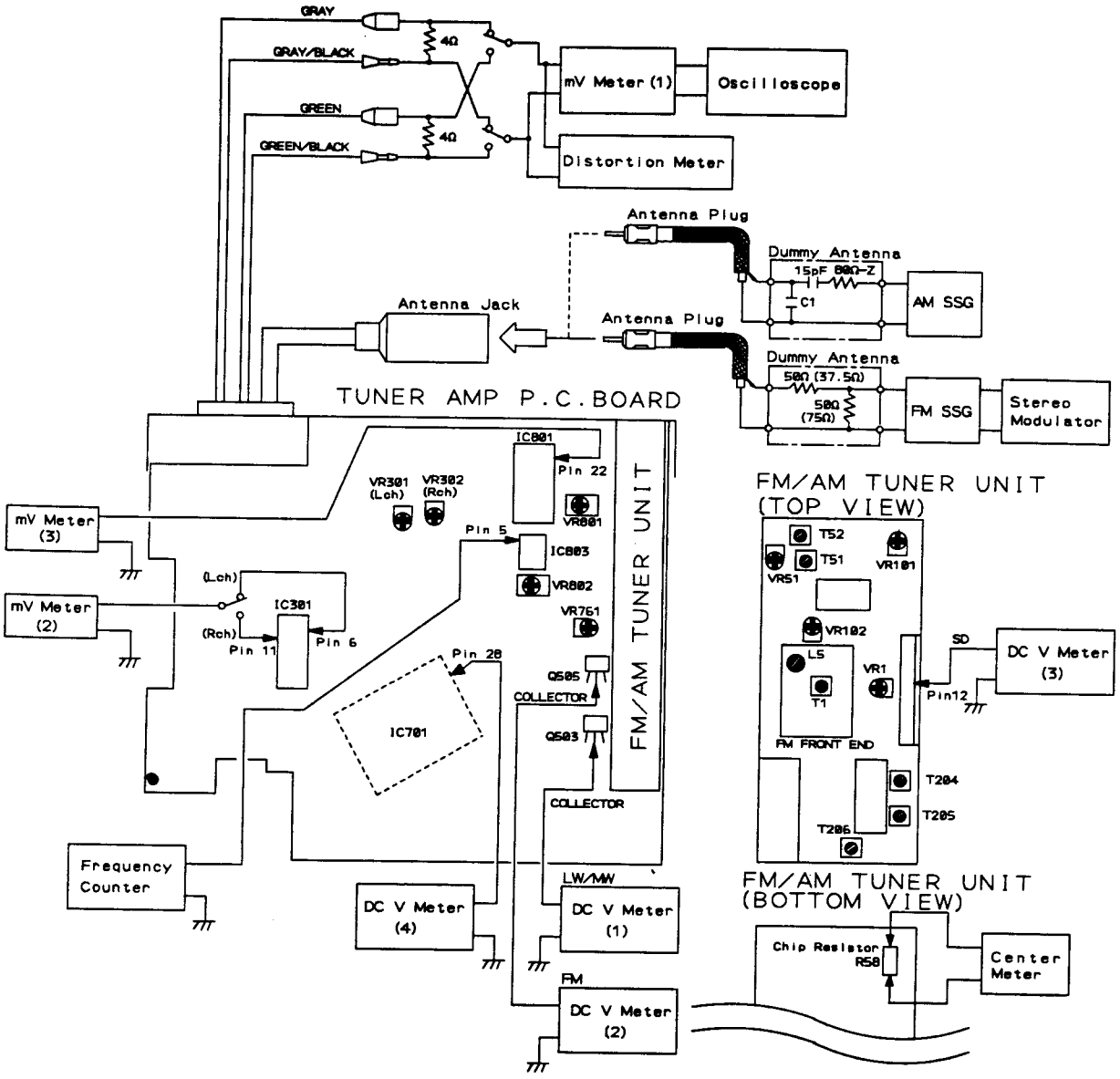

Fig. 7

www.manualscenter.com

DOLBY NR ADJUSTMENT

No.	Cassette Tape	Adjusting Point	Adjustment Method (Switch Position)
1	NCT-150 (400Hz, 200nwb/m)	VR301 (Lch) VR302 (Rch)	mV Meter (2) : -7.2dBs ± 1dB (337mV) (DOLBY NR Switch: OFF) (METAL Switch: OFF)

MW/LW ADJUSTMENT

	No.	AM SSG (400Hz, 30%)		Displayed Frequency (kHz)	Adjusting Point	Adjustment Method (Switch Position)
		Frequency (kHz)	Level (dBμV)			
Tuning Volt	1	(MW MODE)		1,602	——	Verify that DC V Meter (1) is less than 6.5V.
	2	(LW MODE)		153	——	Verify that DC V Meter (1) is more than 2.0V.
IF	1	999	20—25	999	T204, 205, 206	mV Meter (1) : Maximum

www.manualscenter.com

FM ADJUSTMENT ※ Stereo MOD. : 1kHz, L+R=90%, Pilot=10%

	No.	FM SSG (400Hz, 100%)		Displayed Frequency (MHz)	Adjusting Point	Adjustment Method (Switch Position)
		Frequency (MHz)	Level (dBμV)			
IF	1	98.1	60	98.1	T51	Center Meter: 0
	2	98.1	60	98.1	T52	Distortion Meter: Minimum
	3	Repeat No. 1-2 alternately so that the center meter indicates the 0 output and distortion meter indicates minimum output.				
Front End	1			108.0	L5	DC V Meter (2) : 6.2 ± 0.2V
	2			87.5	——	Verify that DC V Meter (2) is more than 2.1 ± 0.6V
	3	98.1	8	98.1	T1	Distortion Meter: Minimum
Soft Mute	1	98.1	60	98.1	——	mV Meter (1) : A dB
	2	98.1	10	98.1	VR102	mV Meter (1) : A-3dB
ARC	1	98.1※	35	98.1	VR101	mV Meter (1) : Separation 5dB
SD	1	98.1	17	98.1	VR51	DC V Meter (3) : Approx. 5V
	2	98.1	16	98.1	——	Verify that DC V Meter (3) is approx. 0V.
	3	98.1	55	98.1	VR1	DC V Meter (3) : Approx. 5V
	4	98.1	54	98.1	——	Verify that DC V Meter (3) is approx. 0V.
SL	1	106.1	30	106.1	VR761	DC V Meter (4) : 1.2 ± 0.05V

RDS/SDK ADJUSTMENT

	No.	FM SSG (400Hz, 100%)		Displayed Frequency (MHz)	Adjusting Point	Adjustment Method (Switch Position)
		Frequency (MHz)	Level (dBμV)			
57k BPF	1	98.1		98.1	VR801	mV Meter (3) : Maximum
DK PLL	1	—	—	—	VR802	Frequency Counter: 125 ± 1Hz

8. BLOCK DIAGRAM

www.manualscenter.com

- **KEH-6000RDS**

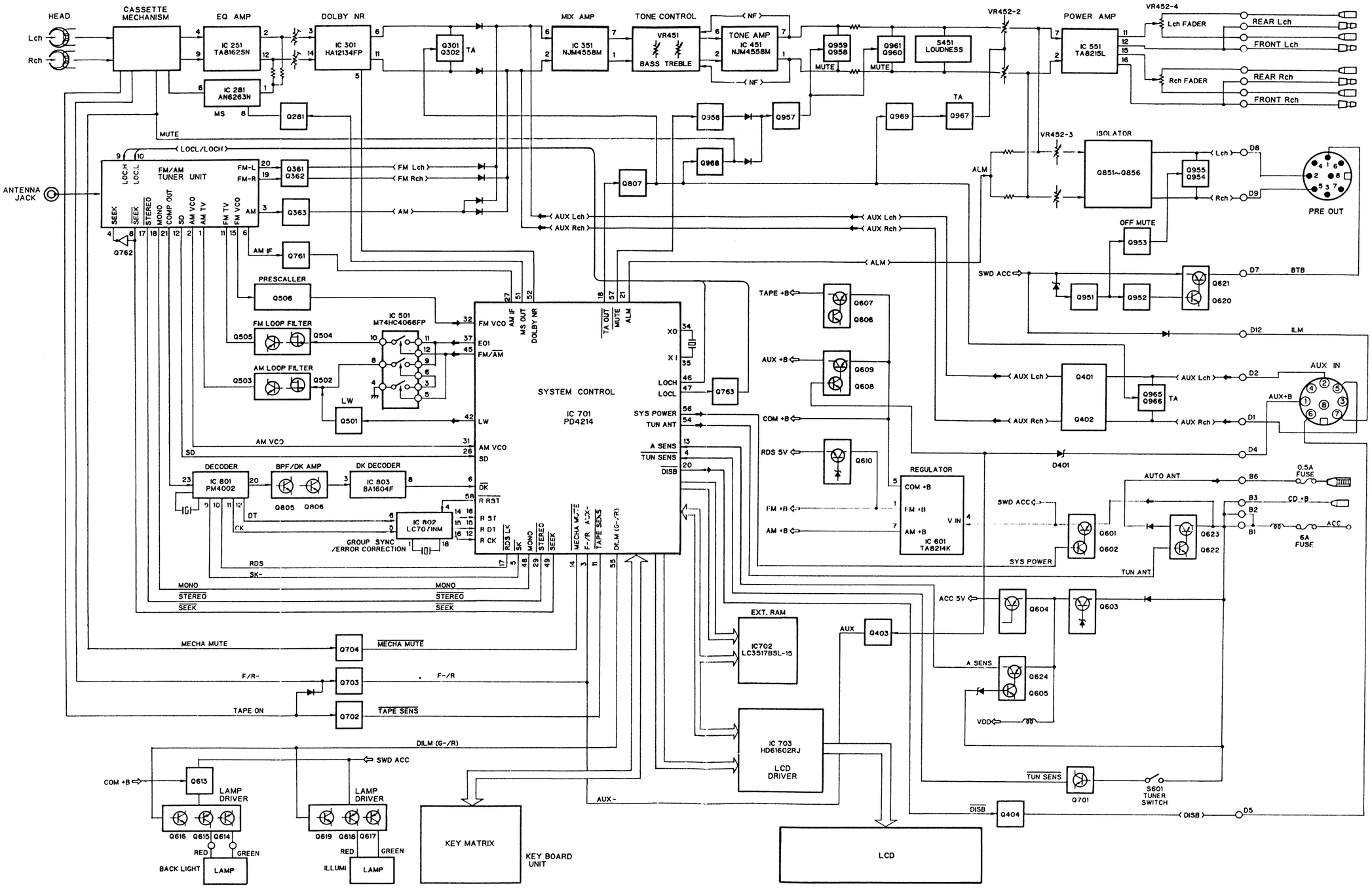

Fig. 8

• ICs

IC51:PA4012

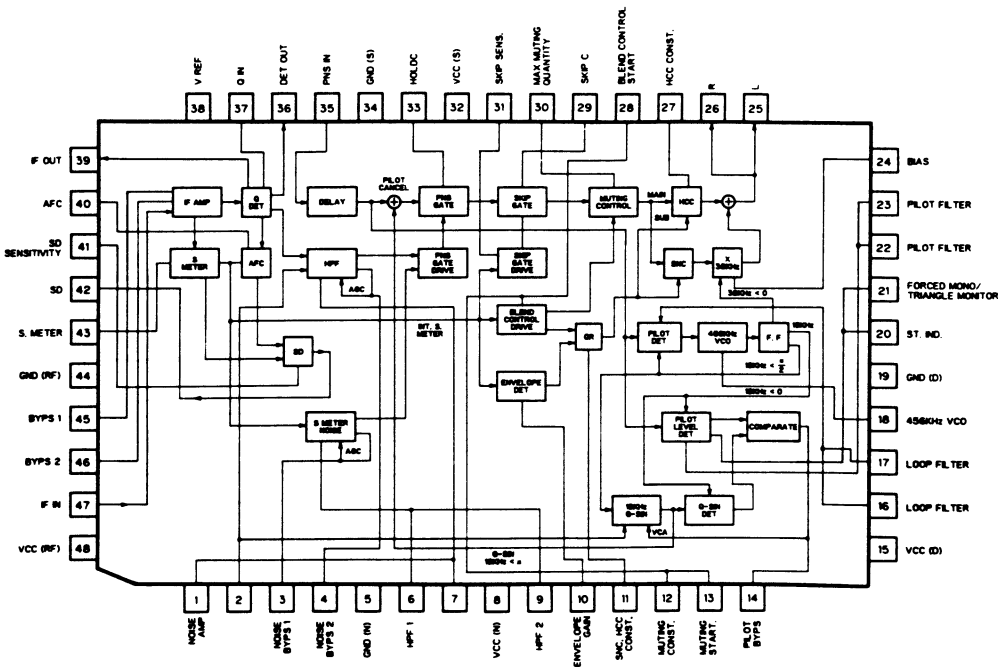

www.manualscenter.com

IC201:PA4010

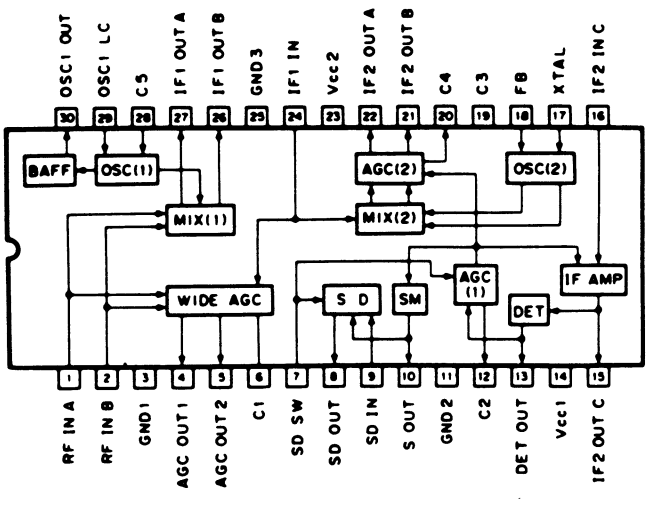

IC301:HA12134FP

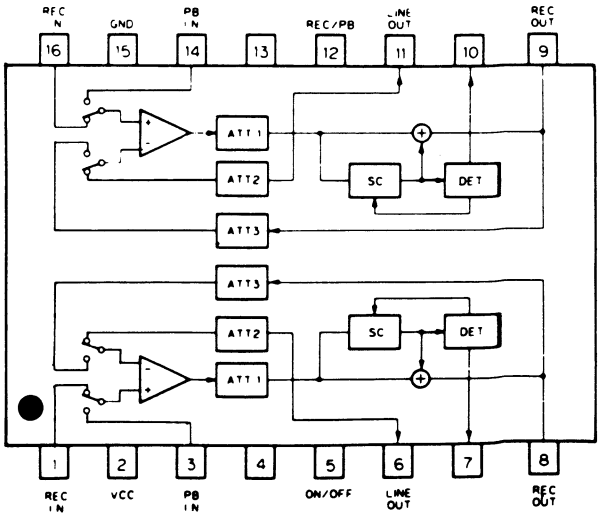

IC251:TA8162SN

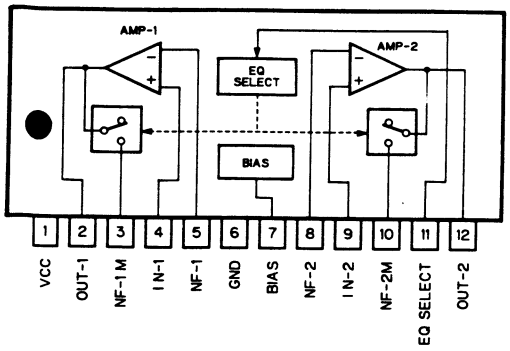

www.manualscenter.com

IC601:TA8214K

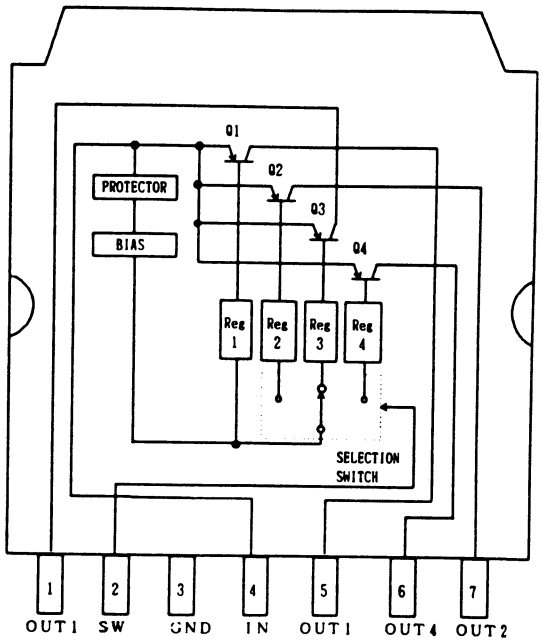

IC501:M74HC4066FP

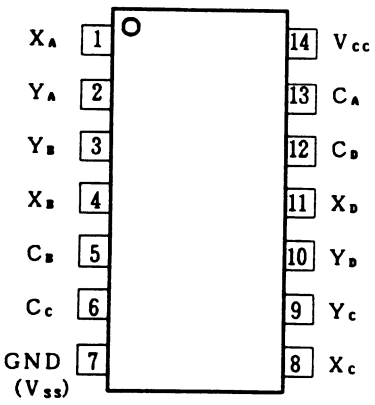

IC351,451:NJM4558M

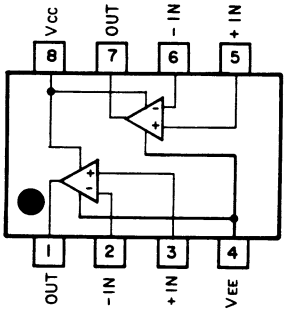

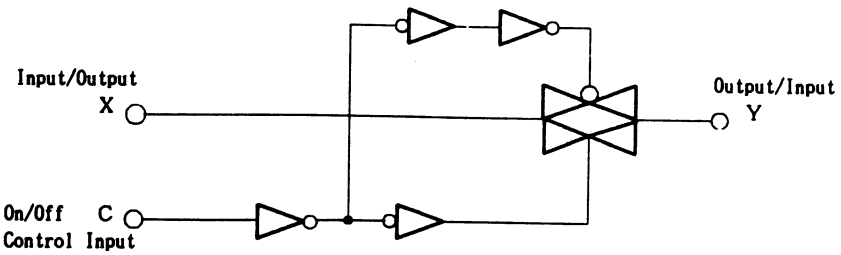

IC281:AN6263N

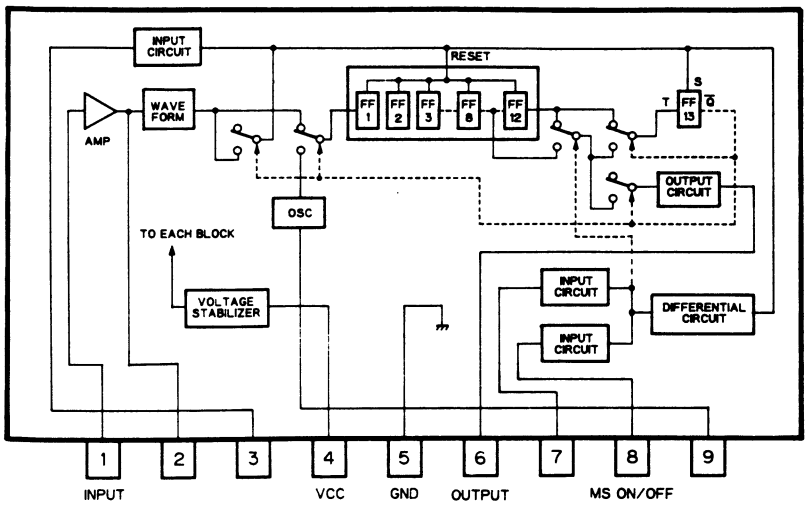

www.manualscenter.com

IC803:BA1604F

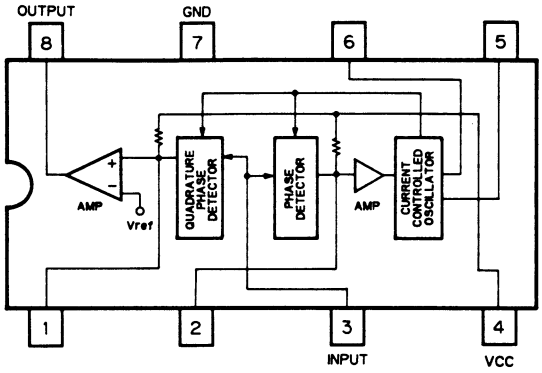

IC703:HD61602RJ

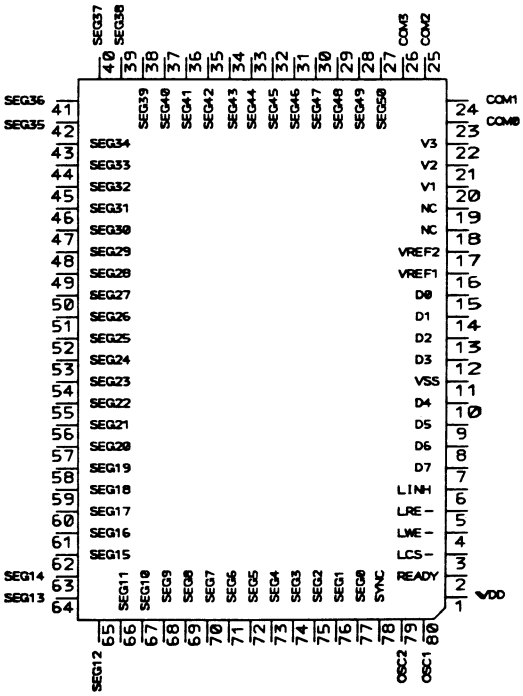

IC551:TA8215L

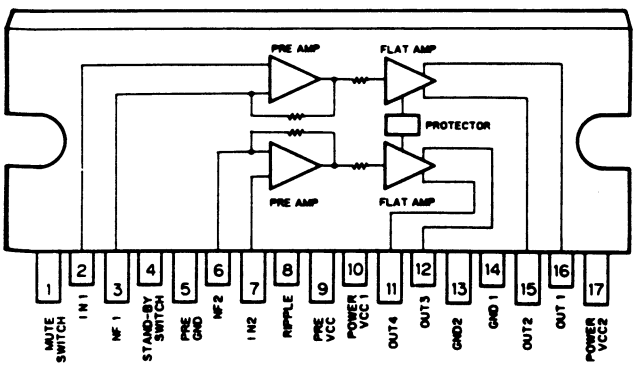

IC801:PM4002

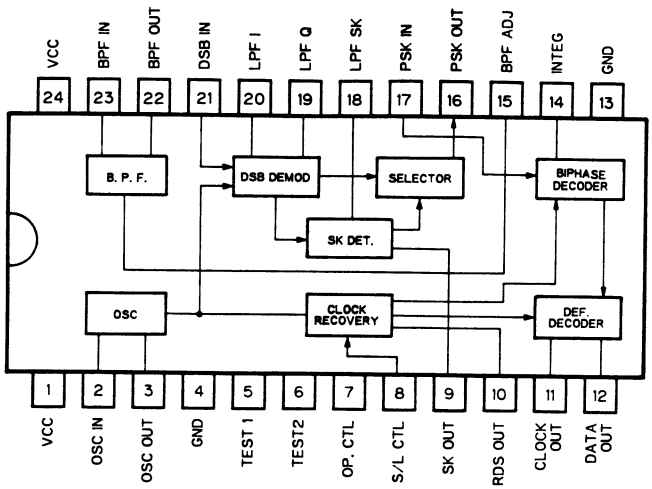

• Pin Functions (PM4002)

Pin No.	Pin Name	I/O	Function and Operation
1	VCC		Power supply for digital circuit
2	OSC IN	Input	Crystal oscillating element connection pin
3	OSC OUT	Output	Crystal oscillating element connection pin
4	GND		Ground for digital circuit
5	TEST 1	Input	Test input pin
6	TEST 2	Output	Test output pin
7	OP. CTL	Input	Operation control input pin. "H":Operation "L":Stop
8	S/L CTL	Input	Sync signal detection mode control input pin. "H":Short mode "L":Long mode
9	SK OUT	Output	SK detection output pin Outputs low signal during SK detection .
10	RDS OUT	Output	RDS sync signal detection output pin
11	CLOCK OUT	Output	Bit rate clock output pin. "L":Stop
12	DATE OUT	Output	RDS data output pin. "L":Stop
13	GND		Ground for analog circuit
14	INTEG		Integral filter pin
15	BPF ADJ		Band pass filter fc adjustment
16	PSK OUT	Output	Bi-phase signal output pin
17	PSK IN	Input	Bi-phase decoder input pin
18	LPF SK		Low pass filter for SK detection
19	LPF Q		Low pass filter for A/D detector
20	LPF I		Low pass filter for sync signal detector
21	DSB IN	Input	DSB demodulator input pin
22	BPF OUT	Output	Band pass filter output pin
23	BPF IN	Input	Band pass filter input pin
24	VCC		Power supply for analog circuit

www.manualscenter.com

IC802:LC7071NM

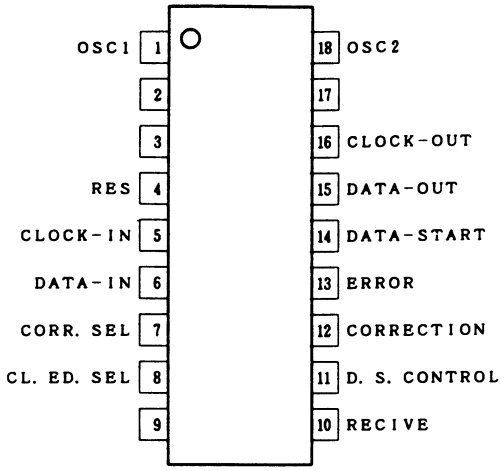

• Pin Functions (LC7071NM)

Pin No.	Pin Name	I/O	Function and Operation	Initial (when reset)
1	OSC1	Input	For connection of 4 MHz ceramic oscillator.	
18	OSC2	Output		
5	CLOCK-IN	Input	Decoded clock input for RDS.	High output
6	DATA-IN	Input	Decoded data input for RDS .	High output
7	CORR.SEL	Input	Error correction select input. Sets whether an error in RDS decoded data is to be corrected before output or not. Input = 0: Not corrected Input = 1: Error correction executed	High output
8	CL.ED.SEL	Input	Serial data clock polarity select input. Input = 0: Serial data output is valid at the rising edge of the output clock. (Serial data output changes at the falling edge of the output clock.) Input = 1: Serial data output is valid at the falling edge of the output clock. (Serial data output changes at the rising edge of the output clock.) Note: Setting is done when an RES signal is input.	High output
11	D.S.CONTROL	Input	Block data start signal control input. Input = 1: Data-start signal is output for all blocks. Input = 0: Data-start signal is output only for 2nd block.	High output
10	RECIVE	Output	RDS data reception output. After sync signal detection is complete, a low level signal is output only while serial data is being output. A high level signal is output normally. Open drain output.	High output
12	CORRECTION	Output	Error correction select output. A low level signal is output when an error in the serial output level has been corrected or when error correction is impossible, and a high level signal is output when error correction is not performed. Open drain output.	High output
13	ERROR	Output	Error present output. A low level signal is output when there is an error in the serial data output and it cannot be corrected. A high level signal is output when there is no error in the serial output data or when it has been corrected.	High output
14	DATA-START	Output	Block data start signal for serial data output.	High output
15	DATA-OUT	Output	Data output for serial data output.	High output
16	CLOCK-OUT	Output	Clock output for serial data output. Output with pull-up resister.	High output
4	RES	Input	System reset input. For resetting and restarting, a low level signal should be input for more than 4 clock cycles.	

www.manualscenter.com

IC702:LC3517BSL-15

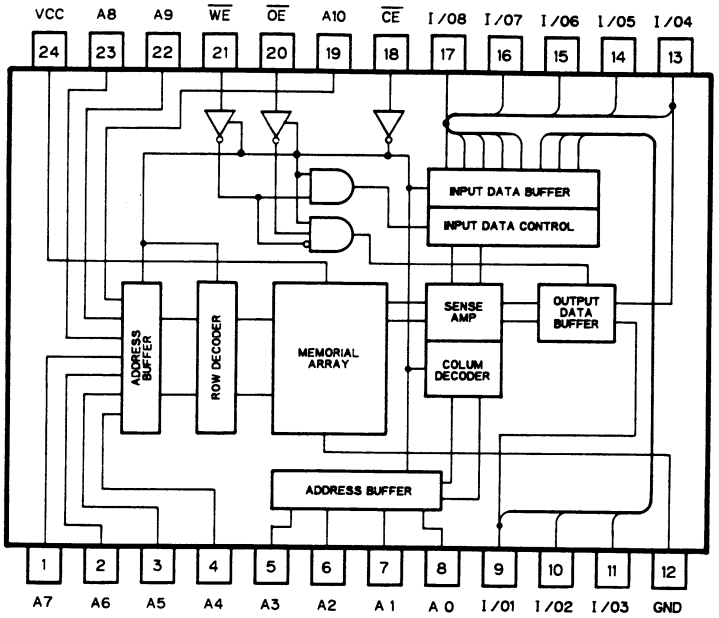

• Pin Functions (LC3517BSL-15)

	Pin18	Pin20	Pin21	Pin9–11, 13–17
Mode	$\overline{CE}$	$\overline{OE}$	$\overline{WE}$	I/O
Read cycle	L	L	H	Data output
Write cycle	L	×	L	Data input
Output disable	L	H	×	High impedance
No choice	H	×	×	High impedance

×:H or L

IC701:*PD4214

*IC's marked by * are MOS type.*
Be careful in handling them because they are very liable to be damaged by electrostatic induction.

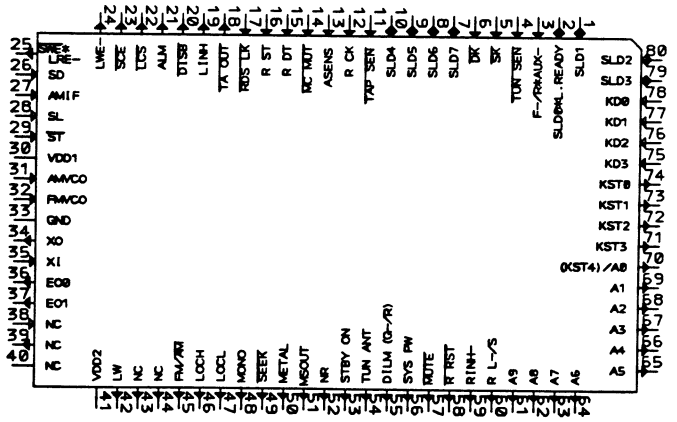

www.manualscenter.com

• Pin Functions (PD4214)

Pin No.	Pin Name	I/O	Output Format	Function and Operation	STBY	RST
1	SLD1	Input/ Output	C	SRAM, LCD data input/output pin	Hiz	Hiz
2	SLD0* L. READY	Input/ Output	C	SRAM, LCD data input/output pin	Hiz	Hiz
3	F-/R*AUX-	Input	N	FWD /REV select input pin(when tape is on) AUX input pin(when tape is off)	Hiz	Hiz
4	$\overline{\text{TUN SEN}}$	Input	N	Tuner power sense input pin	Hiz	Hiz
5	$\overline{\text{SK}}$	Input	C	SK signal input pin	Hiz	Hiz
6	$\overline{\text{DK}}$	Input	C	DK signal input pin	Hiz	Hiz
7 — 10	SLD7 — SLD4	Input/ Output	C	SRAM, LCD data input/output pins	Hiz	Hiz
11	$\overline{\text{TAP SEN}}$	Input		Tape power sense input pin	Hiz	Hiz
12	R CK	Input		Data-clock input pin		
13	ASENS	Input	C	ACC power sense input pin		
14	$\overline{\text{MC MUT}}$	Input	C	Cassette mechanism mute request input pin	Hiz	Hiz
15	R DT	Input	C	Error correction data input pin	Hiz	Hiz
16	R ST	Input	C	Data start input pin	Hiz	Hiz
17	$\overline{\text{RDS LK}}$	Input	C	RDS signal lock input pin	Hiz	Hiz
18	$\overline{\text{TA OUT}}$	Output	N	TA , DK interruption mute output pin	Keep	Keep
19	LINH	Output	N	LCD inhibit output pin	Keep	Keep
20	$\overline{\text{DISB}}$	Output	N	AUX control output pin	Keep	Keep
21	ALM	Output	C	Beep tone output pin	Keep	Keep
22	$\overline{\text{LCS}}$	Output	C	LCD chip select output pin	Keep	Keep
23	$\overline{\text{SCE}}$	Output	C	SRAM chip enable putput pin	Keep	Keep
24	$\overline{\text{SOE}}$*LWE-	Output	C	SRAM output/LCD write enable putput pin	Keep	Keep
25	$\overline{\text{SWE}}$*LRE-	Output	C	SRAM read write control/LCD read enable putput pin	Keep	Keep
26	SD	Input	C	SD signal input pin	Hiz	Hiz
27	AMIF	Input	C	AM IF count input pin	Hiz	Hiz
28	SL	Input	C	Signal level input pin	Hiz	Hiz
29	$\overline{\text{ST}}$	Input	C	Stereo signal input pin	Hiz	Hiz
30	VDD1			Device power supply pin		
31	AM VCO	Input		AM VCO signal input pin		
32	FM VCO	Input		FM VCO signal input pin		
33	GND			GND		
34	XO	Output	C	Crystal oscillating element connection pin		
35	XI	Input	C	Crystal oscillating element connection pin		
36	EO0	Output	C	PLL error putput pin		
37	EO1	Output	C	PLL error putput pin		
38 — 40	NC					
41	VDD2			Device power supply pin		
42	LW	Output	C	Loop filter switching output pin. "H":LW	Keep	Keep
43, 44	NC					
45	FM/$\overline{\text{AM}}$	Output	C	FM/AM power select output pin. "H":FM	L	Keep
46	LOCH	Output	C	Local H setup output pin	Keep	Keep
47	LOCL	Output	C	Local L setup output pin	Keep	Keep
48	MONO	Output	C	Forced mono output pin	Keep	Keep
49	$\overline{\text{SEEK}}$	Output	C	SEEK output pin Outputs high signal during SEEK operation.	L	Keep

www.manualscenter.com

Pin No.	Pin Name	I/O	Output Format	Function and Operation	STBY	RST
50	METAL	Output	C	Tape METAL select output pin. "H":METAL	L	Keep
51	MSOUT	Output	C	Tape MS output pin. Outputs during MS operation.	L	Keep
52	NR	Output	C	Tape Dolby NR output pin	L	Keep
53	STBY ON	Output	C	Amplifier standby request output pin	L	Keep
54	TUN ANT	Output	C	Auto antenna output pin	L	Keep
55	DILM(G-/R)	Output	C	Dual illumination select output pin	L	Keep
56	SYS PW	Output	C	System(power amp)power supply control output pin	L	Keep
57	$\overline{\text{MUTE}}$	Output	C	System mute output pin	L	Keep
58	$\overline{\text{R RST}}$	Output	C	Data reset output pin	L	Keep
59	RINH-	Output	C	RDS data inhibit output pin	L	Keep
60	R L-/S	Output	C	Decoder time constant select output pin	L	Keep
61—69	A9—A1	Output	C	SRAM address output pins	L	Keep
70	(KST4)/A0	Output	C	Key strobe output pin/SRAM address output pin	L	Keep
71—74	KST3—KST0	Output	C	Key strobe output pins	L	Keep
75—78	KD3—KD0	Input	C	Key return input pins		
79, 80	SLD3, SLD2	Input/ Output	C	SRAM, LCD data input/output pins	Hiz	Hiz

Output Format	Meaning
C	CMOS Output
N	N channel open drain

STBY/RST	Meaning
Hiz	High-impedance

• FM FRONT END (CWB1035)

NOTE:
:Chip Resistor
:Chip Capacitor
:Chip Diode
:Chip Transistor

Decimal points for resistor and capacitor fixed values are expressed as:
2.2→2R2
0.022→R022

www.manualscenter.com

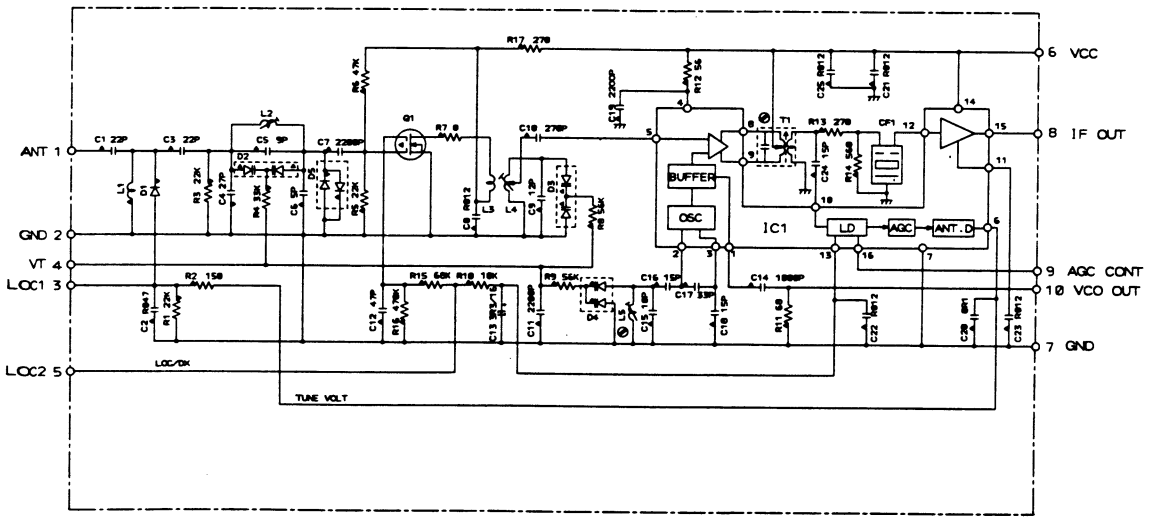

• LCD (CAW1098)

COMMON

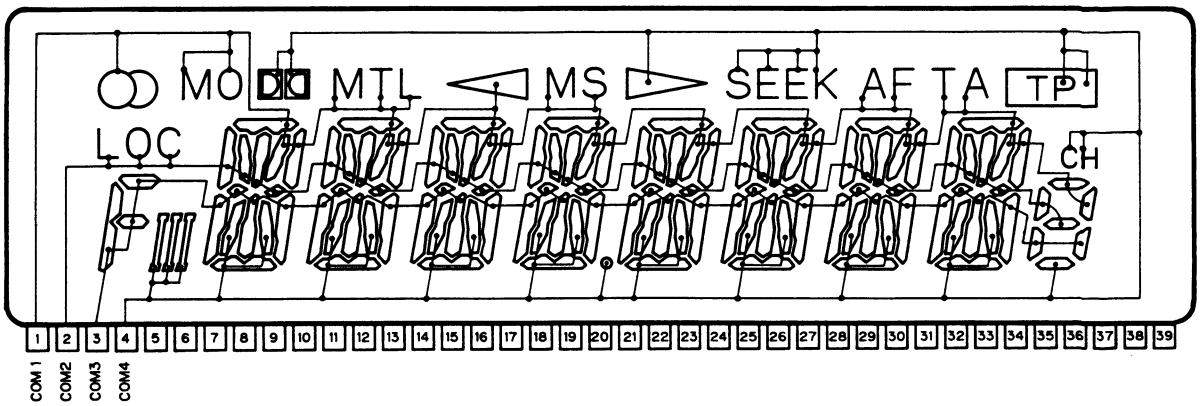

www.manualscenter.com

SEGMENT

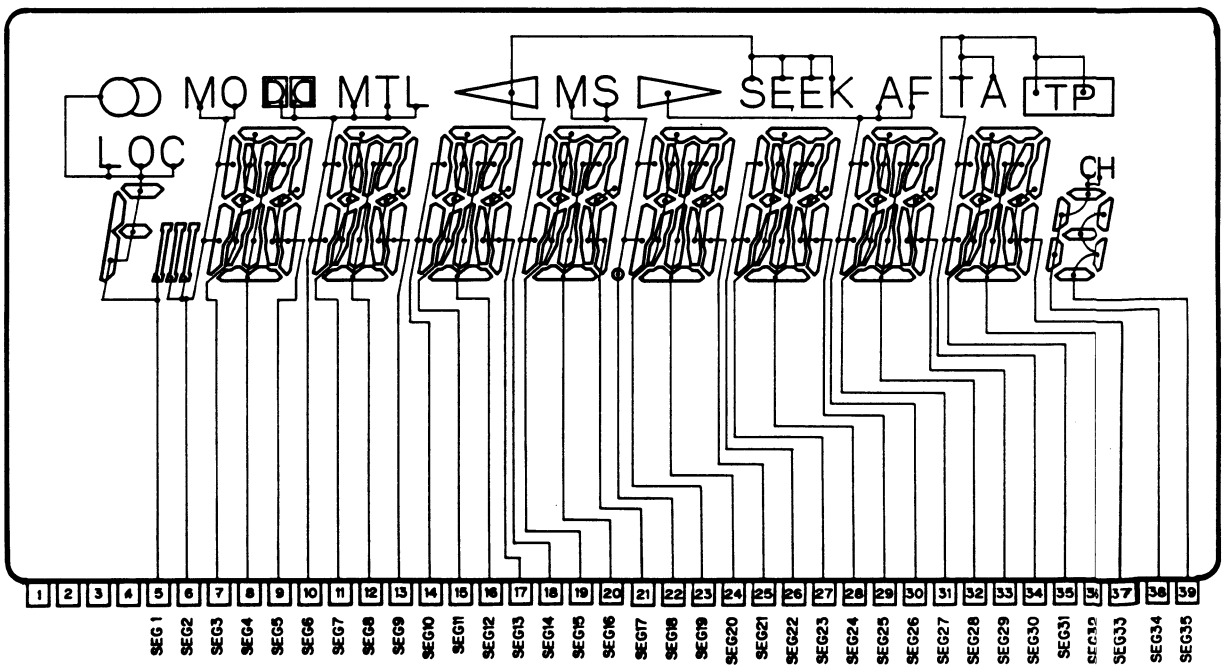

9. CONNECTION DIAGRAM (KEH-6000RDS)

P.C.BOARD UNIT

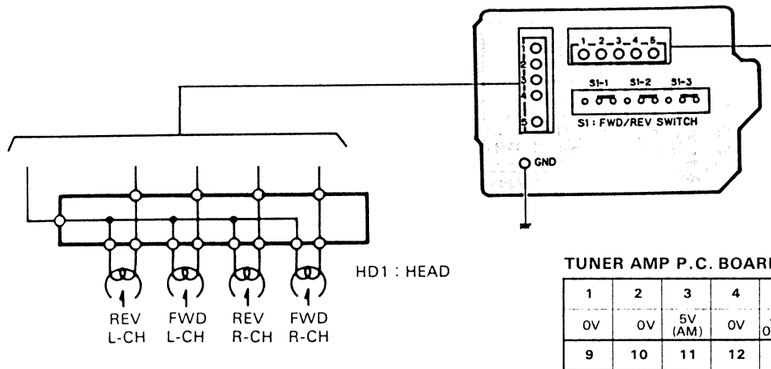

TUNER AMP P.C. BOARD : IC501

1	2	3	4	5	6	7	8
0V	0V	5V (AM)	0V	4.9V 0V(AM)	6.0V (AM)	0V	2.2V
9	10	11	12	13	14		
2.2V	2.2V	2.2V	4.5V	0V	5.1V		

TO FM/AM TUNER UNIT

KEY BOARD UNIT

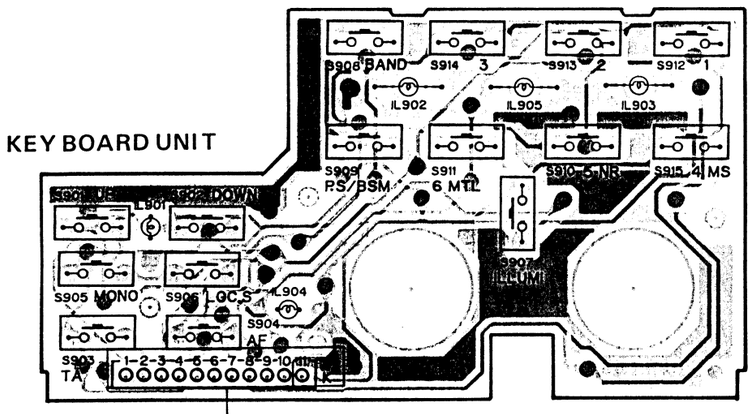

LAMP P.C.BOARD

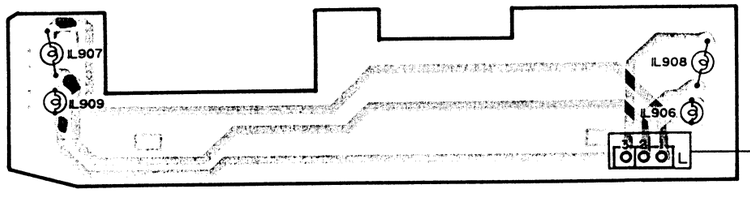

TUNER AMP P.C.BOARD

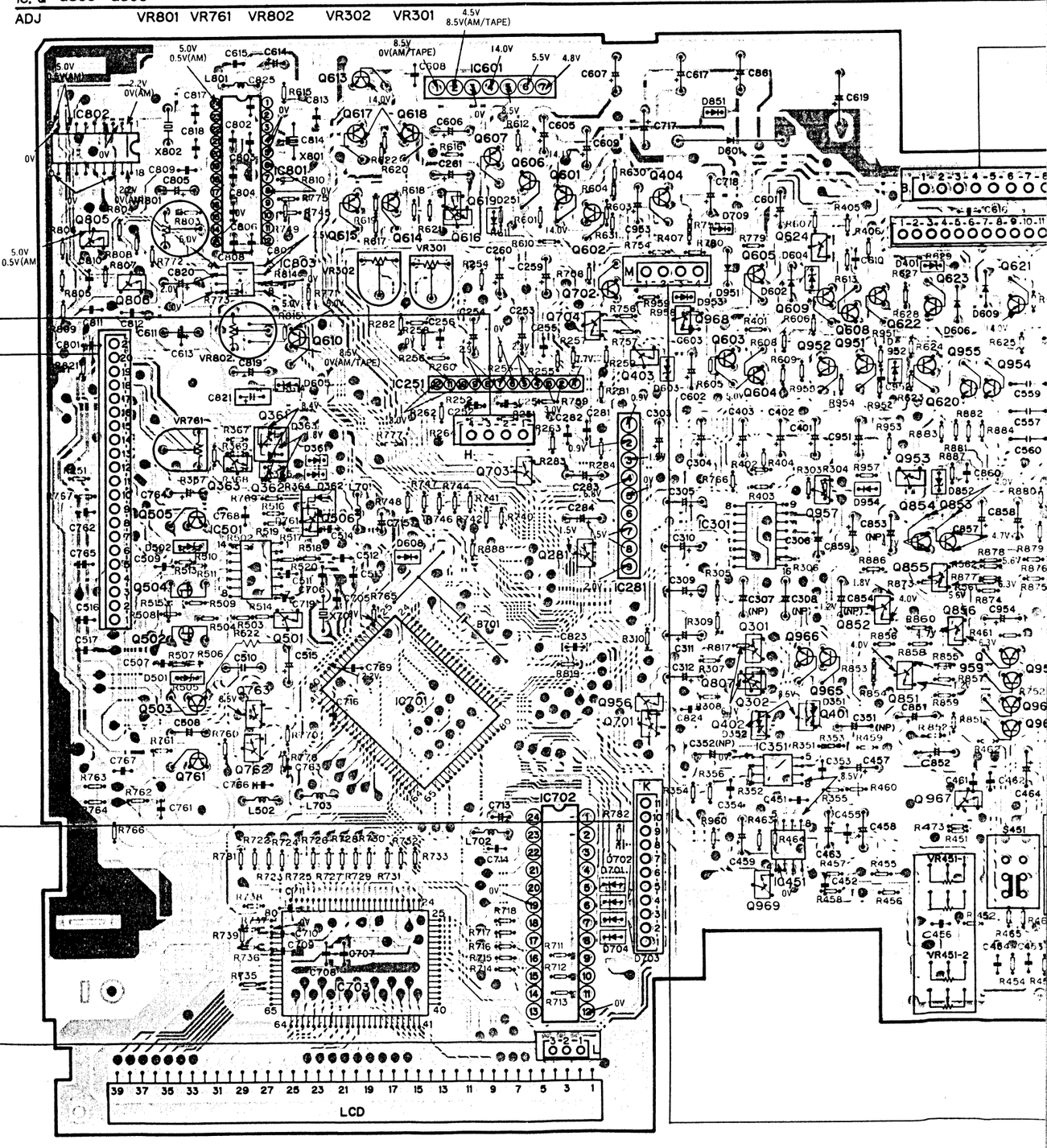

www.manualscenter.com

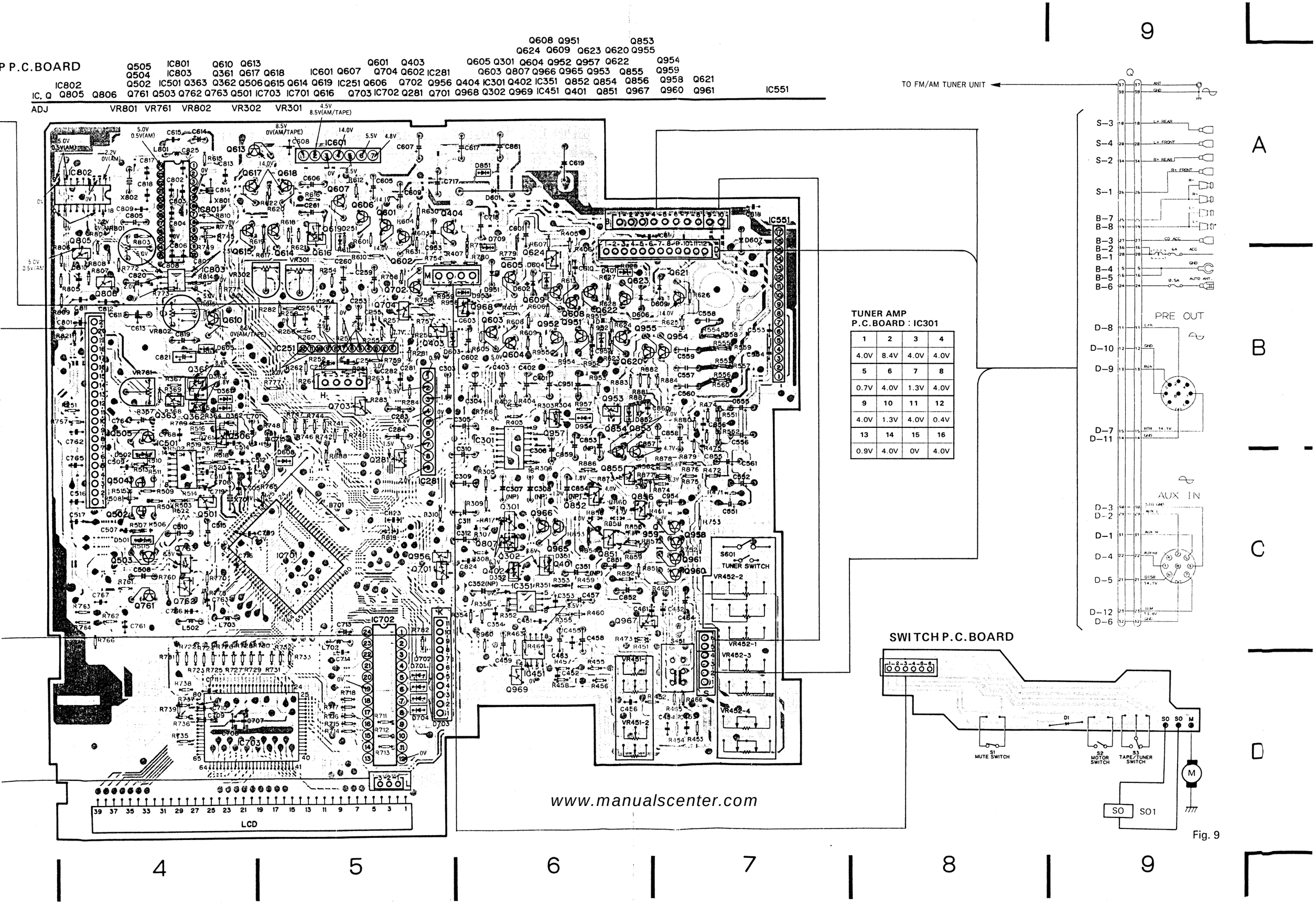

TUNER AMP
P.C.BOARD : IC301

1	2	3	4
4.0V	8.4V	4.0V	4.0V
5	6	7	8
0.7V	4.0V	1.3V	4.0V
9	10	11	12
4.0V	1.3V	4.0V	0.4V
13	14	15	16
0.9V	4.0V	0V	4.0V

Fig. 9

www.manualscenter.com

10. SCHEMATIC CIRCUIT DIAGRAM

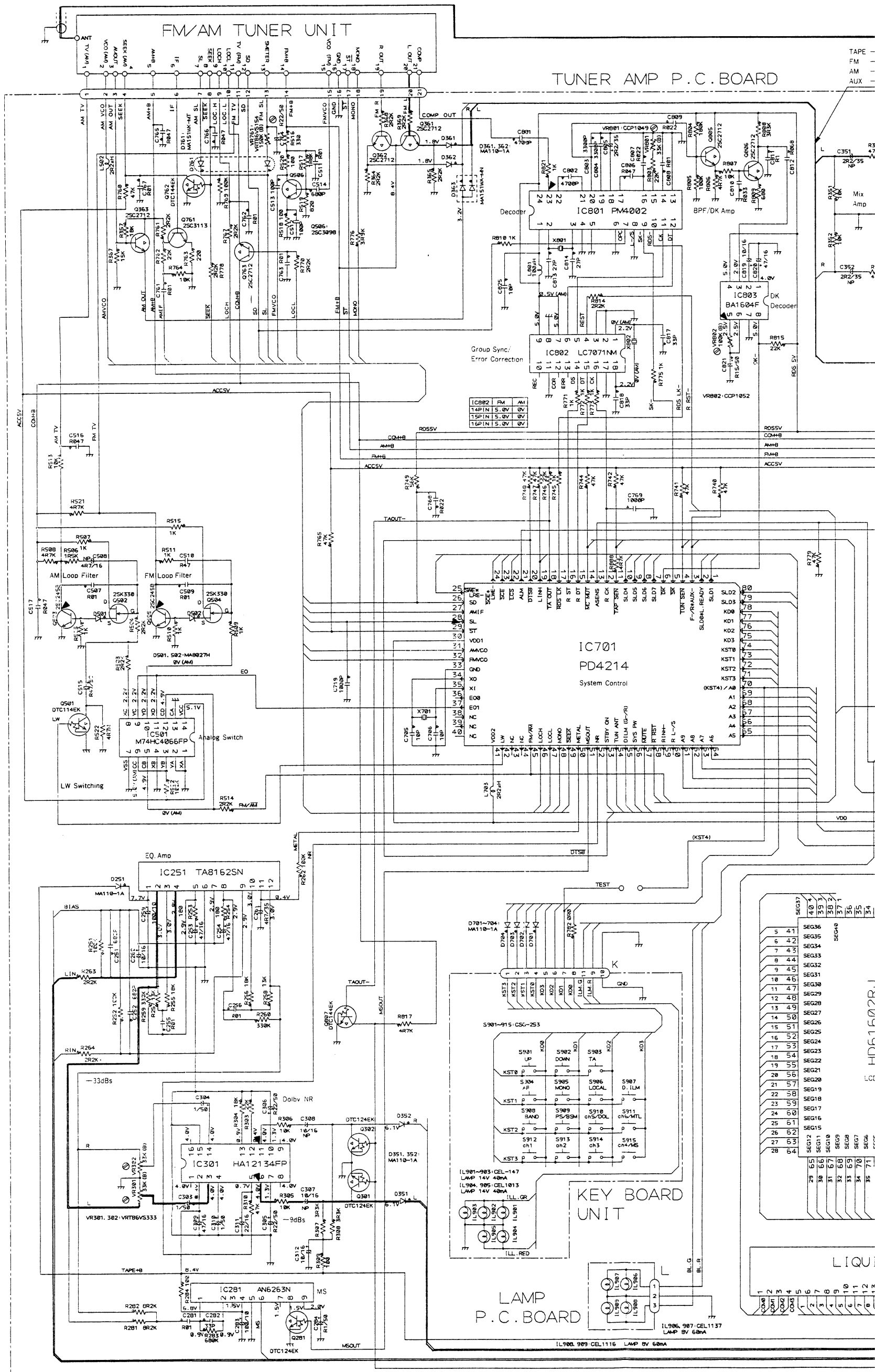

www.manualscenter.com

Tuner Amp Unit
Consists of
- FM/AM Tuner Unit
- Lamp P.C.Board
- Tuner Amp P.C.Board

NOTE:
:Chip Resistor
:Chip Capacitor
:Chip Diode
:Chip Transistor
Decimal points for resistor and capacitor fixed values are expressed as:
2.2→2R2
0.022→R022

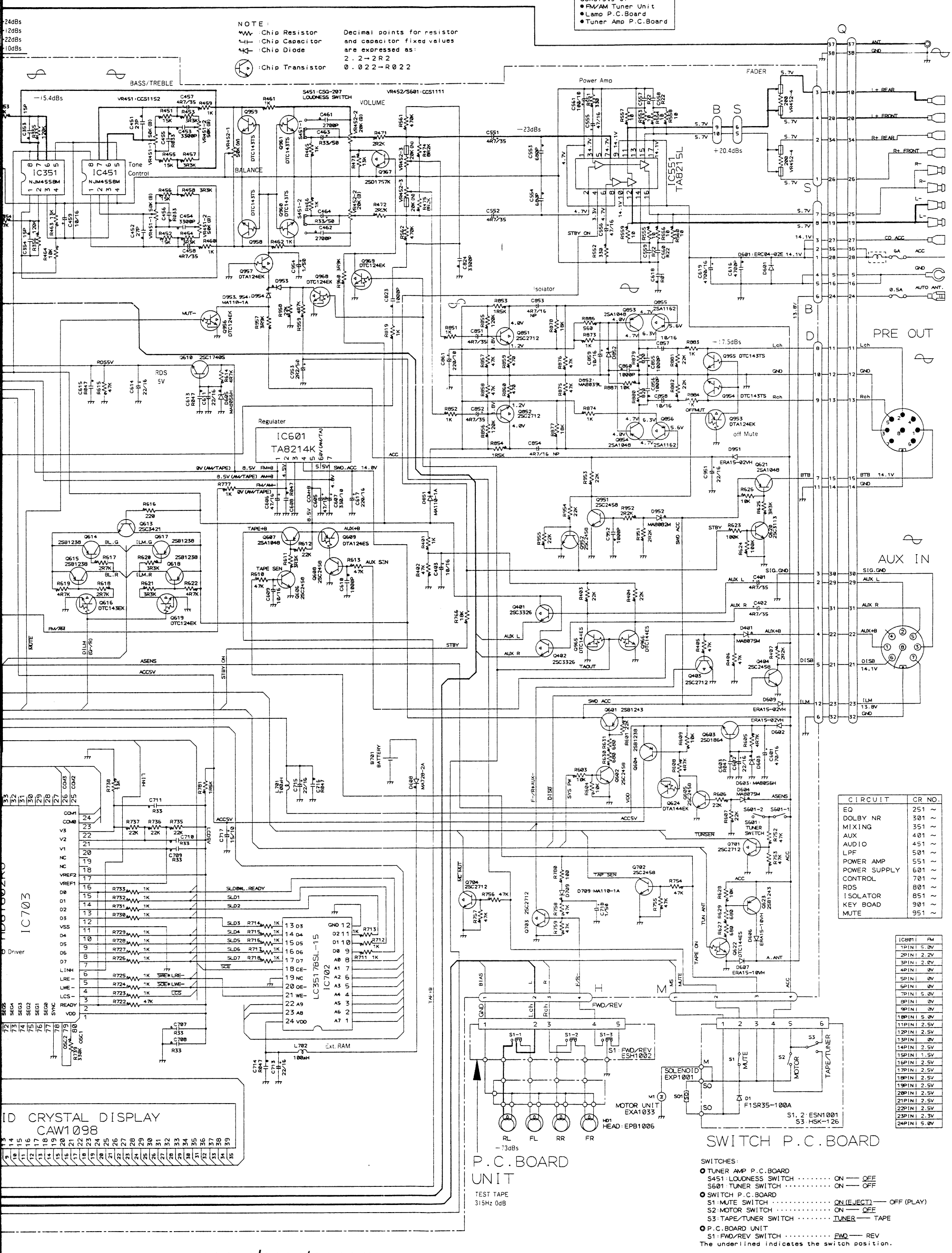

CIRCUIT	CR NO.
EQ	251 ~
DOLBY NR	301 ~
MIXING	351 ~
AUX	401 ~
AUDIO	451 ~
LPF	501 ~
POWER AMP	551 ~
POWER SUPPLY	601 ~
CONTROL	701 ~
RDS	801 ~
ISOLATOR	851 ~
KEY BOAD	901 ~
MUTE	951 ~

IC801	FM
1PIN	5.0V
2PIN	2.2V
3PIN	2.0V
4PIN	0V
5PIN	0V
6PIN	0V
7PIN	5.0V
8PIN	0V
9PIN	0V
10PIN	5.0V
11PIN	2.5V
12PIN	2.5V
13PIN	0V
14PIN	2.5V
15PIN	1.5V
16PIN	2.5V
17PIN	2.5V
18PIN	2.5V
19PIN	2.5V
20PIN	2.5V
21PIN	2.5V
22PIN	2.5V
23PIN	2.3V
24PIN	5.0V

www.manualscenter.com

Fig. 10

11. SCHEMATIC CIRCUIT DIAGRAM (KEH-4000RDS)

www.manualscenter.com

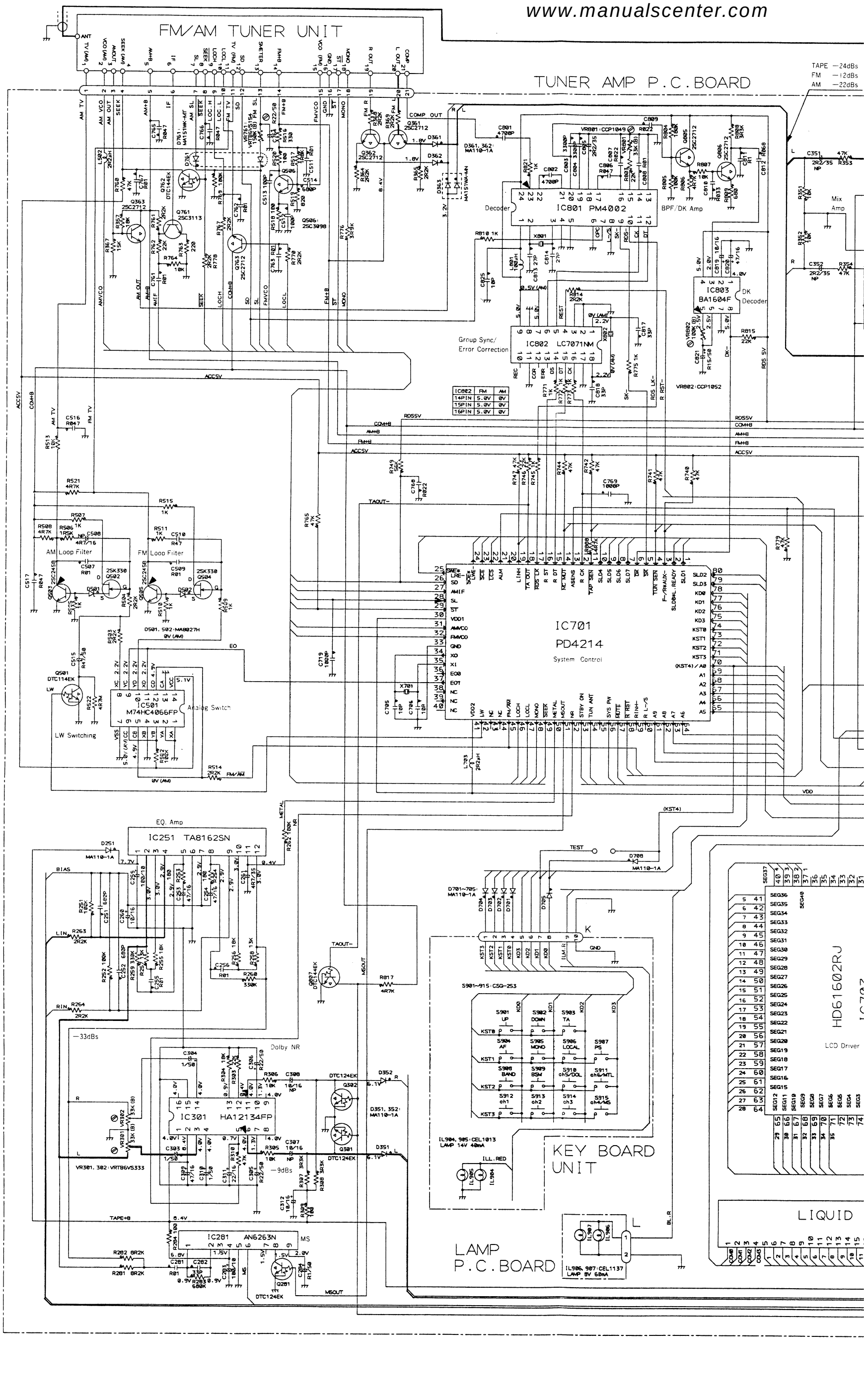

Tuner Amp Unit

Consists of
- FM/AM Tuner Unit
- Lamp P.C.Board
- Tuner Amp P.C.Board

NOTE :
- Chip Resistor
- Chip Capacitor
- Chip Diode
- Chip Transistor

Decimal points for resistor and capacitor fixed values are expressed as:
2.2→2R2
0.022→R022

BASS/TREBLE
Tone Control
BALANCE
VOLUME
S451:CSG-207 LOUDNESS SWITCH
VR451:CCS1152
VR452/S601:CCS1113
Power Amp
FADER
IC551 TA8215L
IC351 NJM4558M
IC451 NJM4558M
STBY ON
MUT-
RDS 5V
Regulater IC601 TA8214K
ACC
SWD ACC
TAPE+B
TAPE SEN
FM/AM
MUTE
STBY
ASENS
ACC5V
TUNSEN
TUN ANT
TAP+B
IC703
IC702 LC3517BSL-15
Ext.RAM
B701 BATTERY
D608 MA728-2A
L701 100μH
L702 100μH
SYS PW
VDD
SWD ACC
TAPE ON
A.ANT
SLD0*RL.READY
SLD1
SLD2
SLD3
SLD4
SLD5
SLD6
SLD7
SCE
SWE*LRE-
SCE*LWE-
LCS
ANT
GND
L+ REAR
L+ FRONT
R+ REAR
R+ FRONT
R-
R-
L-
L-
GD ACC
ACC
GND
AUTO ANT.
6A
0.5A
D601: ERC04-02E
D602 ERA15-02VH
D603: MA8056H
D604 MA8075M
D607 ERA15-10VH
D951 ERA15-02VH
D952 MA8082M
Q601 2SB1243
Q602 2SC2458
Q603 2SD1864
Q604 2SB1233
Q605 2SC2458
Q606 2SC2458
Q607 2SA1048
Q610 2SC1740S
Q613 2SC3421
Q622 DTC144ES
Q623 2SB1243
Q624 DTA144EK
Q701 2SC2712
Q702 2SC2458
Q703 2SC2712
Q704 2SC2712
Q951 2SC2458
Q952 2SC2458
Q957 DTA124EK
Q958 DTC143TS
Q959 DTC143TS
Q960 DTC143TS
Q961 DTC143TS
Q967 2SD1757K
Q968 DTC124EK
Q969 DTC124EK
Q970 DTC124EK
D953, 954: D954 MA110-1A
D709: MA111B-1A
CRYSTAL DISPLAY CAW1098
HD1 HEAD: EPB1006
M1 MOTOR UNIT EXA1033
SOLENOID EXP1001
D1 F1SR35-100A
S1, 2: ESN1001
S3: HSK-126
S1: FWD/REV ESH1002
RL FL RR FR
-73dBs
P.C.BOARD UNIT
TEST TAPE 315Hz 0dB
SWITCH P.C.BOARD
-15.4dBs
-23dBs
+20.4dBs

CIRCUIT	CR NO.
EQ	251 ~
DOLBY NR	301 ~
MIXING	351 ~
AUX	401 ~
AUDIO	451 ~
LPF	501 ~
POWER AMP	551 ~
POWER SUPPLY	601 ~
CONTROL	701 ~
RDS	801 ~
ISOLATOR	851 ~
KEY BOAD	901 ~
MUTE	951 ~

IC801	FM
1PIN	5.0V
2PIN	2.2V
3PIN	2.0V
4PIN	0V
5PIN	0V
6PIN	0V
7PIN	5.0V
8PIN	0V
9PIN	0V
10PIN	5.0V
11PIN	2.5V
12PIN	2.5V
13PIN	0V
14PIN	2.5V
15PIN	1.5V
16PIN	2.5V
17PIN	2.5V
18PIN	2.5V
19PIN	2.5V
20PIN	2.5V
21PIN	2.5V
22PIN	2.5V
23PIN	2.3V
24PIN	5.0V

SWITCHES:
- TUNER AMP P.C.BOARD
  - S451:LOUDNESS SWITCH ····· ON — OFF
  - S601:TUNER SWITCH ····· ON — OFF
- SWITCH P.C.BOARD
  - S1:MUTE SWITCH ····· ON (EJECT) — OFF (PLAY)
  - S2:MOTOR SWITCH ····· ON — OFF
  - S3:TAPE/TUNER SWITCH ····· TUNER — TAPE
- P.C.BOARD UNIT
  - S1:FWD/REV SWITCH ····· FWD — REV

The underlined indicates the switch position.

www.manualscenter.com

Fig. 11

12. CONNECTION DIAGRAM (KEH-4000RDS)

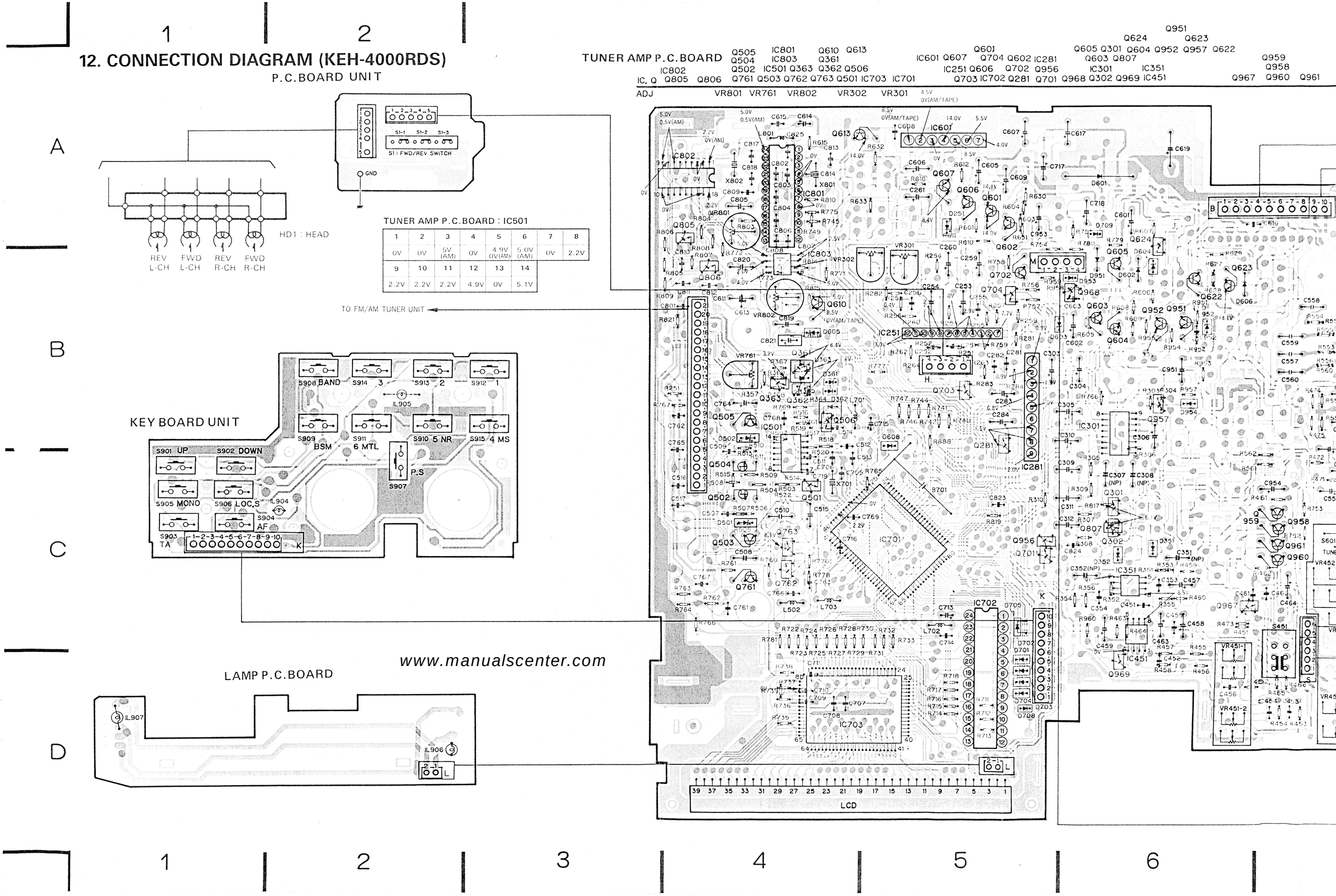

TUNER AMP P.C.BOARD : IC501

1	2	3	4	5	6	7	8
0V	0V	5V (AM)	0V	4.9V 0V(AM)	5.0V (AM)	0V	2.2V
9	10	11	12	13	14		
2.2V	2.2V	2.2V	4.9V	0V	5.1V		

www.manualscenter.com

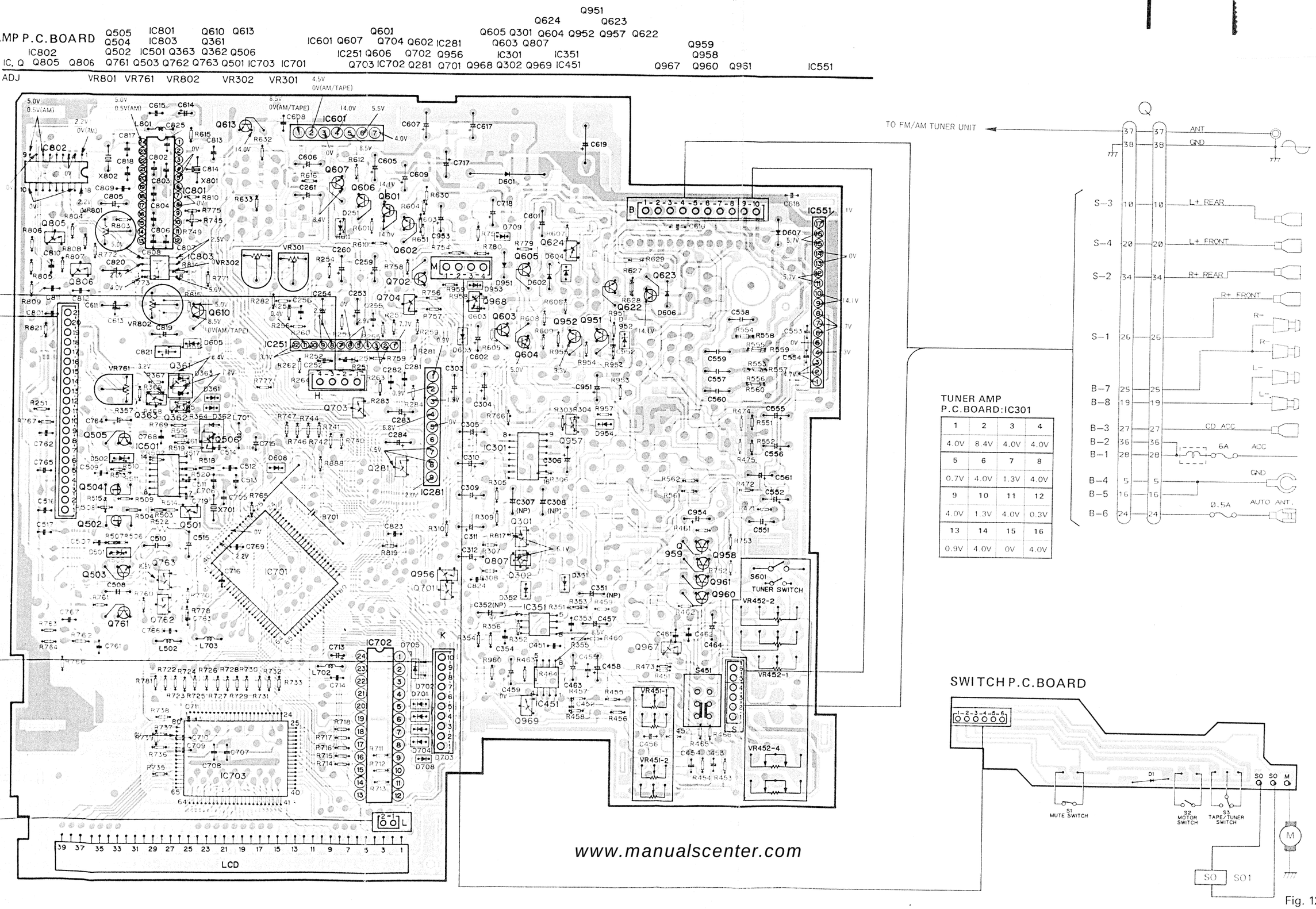

TUNER AMP
P.C.BOARD:IC301

1	2	3	4
4.0V	8.4V	4.0V	4.0V
5	6	7	8
0.7V	4.0V	1.3V	4.0V
9	10	11	12
4.0V	1.3V	4.0V	0.3V
13	14	15	16
0.9V	4.0V	0V	4.0V

Fig. 12

www.manualscenter.com

13. CIRCUIT DIAGRAM AND P.C. BOARDS PATTERN

- **FM/AM Tuner Unit**

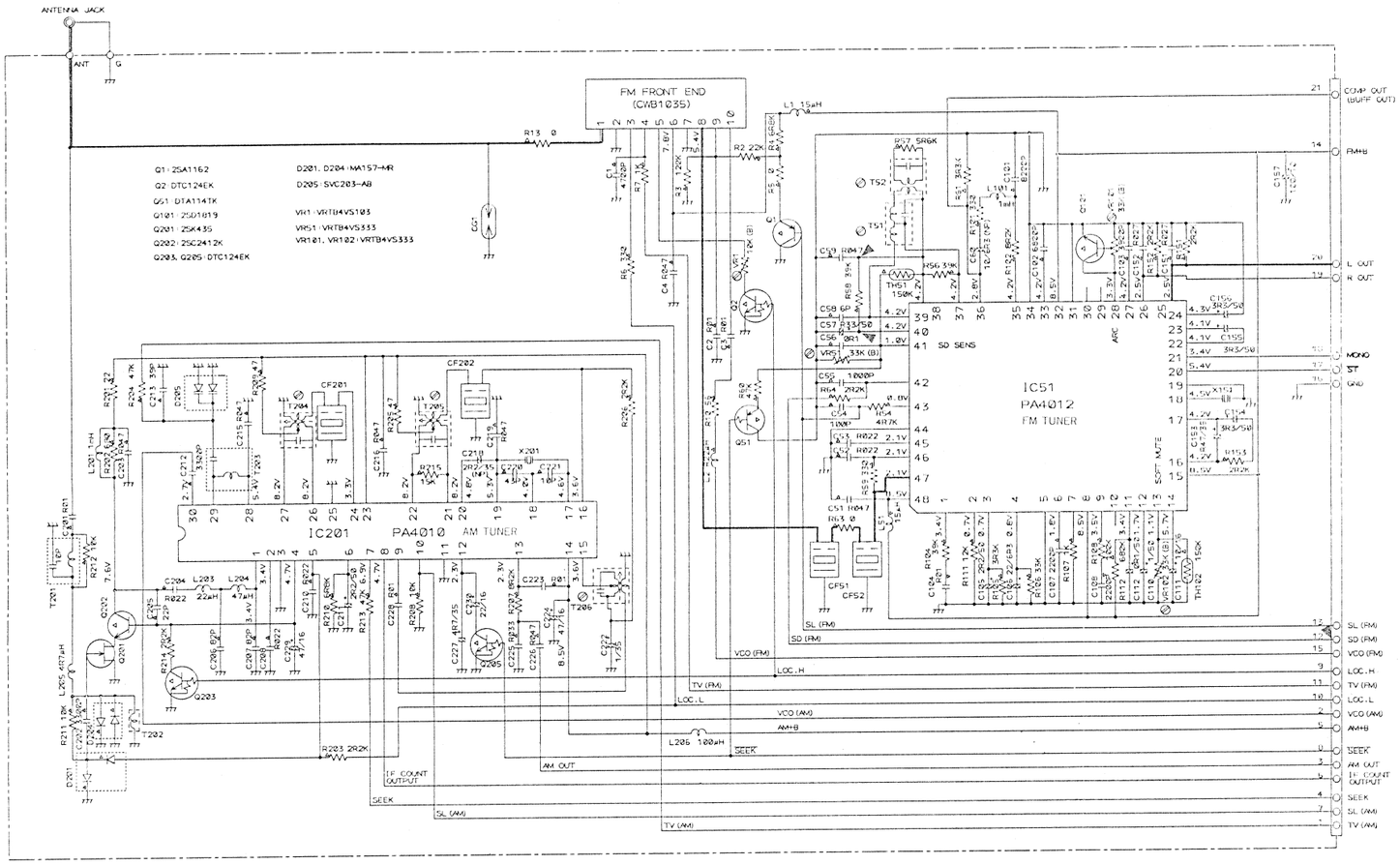

Fig. 13

www.manualscenter.com

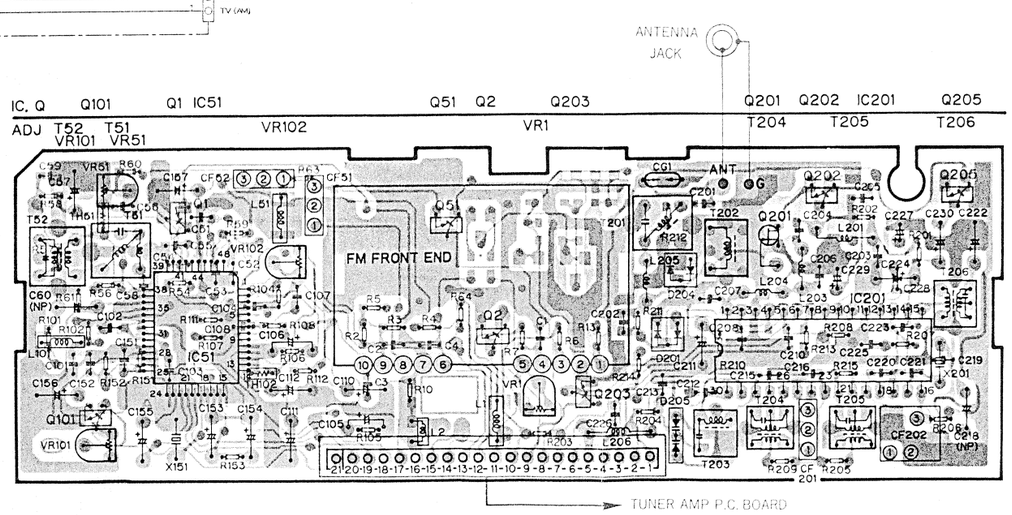

Fig. 14

14. EXPLODED VIEW

NOTE:

- *Parts whose parts numbers are omitted are subject to being not supplied.*
- *Parts marked by "◉" are not always kept in stock. Their delivery time may be longer than usual or they may be unavailable.*

• Parts List (EW Model)

Mark	No.	Description	Part No.
	1	Case	
◉	2	Quick Release Handle Assy	CXA3186
	3	Panel	
	4	Cover	
	5	Button	CAC2165
	6	Screw	CMZ50P080FMC
	7	Handle Unit	CXA3490
	8	Handle	CNC3197
	9	Handle-Unit	CXA3471
	10	Screw	BPZ20P080FMC
	11	Bush (KEH-6000RDS)	CNV-724
	12	Bush	CNV-724
	13	Lamp (KEH-6000RDS)	CEL-147
	14	Lamp	CEL1013
	15	Bush	CNW-855
	16	Bush (KEH-6000RDS)	CNW-855
	17	Plug (KEH-6000RDS)	
		Plug (KEH-4000RDS)	
	18	Cushion	
	19	Lens	CNV2289
◉	20	Key Board Unit (KEH-6000RDS)	CWS1161
◉		Key Board Unit (KEH-4000RDS)	CWS1162
	21	Button (TUNE)	CAC2210
	22	Spring	CBH1091
	23	Door	CAT1315
	24	Grille Unit (KEH-6000RDS)	CXA3098
		Grille Unit (KEH-4000RDS)	CXA3322
	25	Button (1, 4)	CAC2221
	26	Button (2, 5)	CAC2222
	27	Button (3, 6)	CAC2223
	28	Button (KEH-6000RDS) (BAND, P. S/BSM)	CAC2224
		Button (KEH-4000RDS) (BAND, BSM)	CAC2430
	29	Knob (FADER)	CAA1209
	30	Knob (VOLUME)	CAA1208
	31	Knob (BASS/TREBLE)	CAA1210
	32	Cushion	
	33	Button	CAC2217
	34	Spring	CBH1187
	35	Knob (DIRECTION)	CAC2163
	36	Screw	BMZ26P050FMC
	37	Cassette Mechanism Assy	EXK1071
	38	Knob (< <)	CAC2159
	39	Knob (> >)	CAC2161
	40	Volume (KEH-6000RDS)	CCS1111
		Volume (KEH-4000RDS)	CCS1113
	41	Volume	CCS1152
	42	Holder	
	43	Screw	BMZ30P120FMC
	45	IC	TA8215L
	46	Holder	
	47	Switch	CSG-207
	48	Button (LOUDNESS)	CAC2209
	49	Connector (11P) (KEH-6000RDS) Connector (10P) (KEH-4000RDS)	
	50	Insulator	
	51	Screw	BMZ30P060FMC
	52	Chassis Unit (KEH-6000RDS) Chassis Unit (KEH-4000RDS)	
	53	Clamper	

www.manualscenter.com

Mark No.	Description	Part No.
54	Cord Assy (KEH-6000RS)	CDE2618
	Cord Assy (KEH-4000RS)	CDE2745
55	Connector	
56	Connector	
57	IC	TA8214K
58	Transistor	2SC3421
59	Holder	
60	Battery	CEX1008
61	Screw	BMZ30P040FMC
62	Clamper	
63	Box	CNB1289
64	Screw	CBA1073
65	Cord Assy (KEH-6000RDS)	CDE2241
	Cord Assy (KEH-4000RDS)	CDE2744
◉ 66	FM/AM Tuner Unit	CWE1171
67	Antenna Jack	CKX1010
68	Insulator	
69	FM Front End	CWB1035
70	Plug	
71	Holder	
72	Lever Unit	
73	Spring	CBH1191
74	Plug (KEH-6000RDS)	
	Plug (KEH-4000RDS)	
75	Lamp (KEH-6000RDS)	CEL1116
76	Lamp	CEL1137
77	Housing	CNV2290
78	Lens	CNV2291
79	Plate	
80	LCD	CAW1098
81	Holder	
◉ 82	Tuner Amp Unit (KEH-6000RDS)	CWM2181
◉	Tuner Amp Unit (KEH-4000RDS)	CWM2179
83	Spacer	
84	Spring	CBH1352

NSP:No Spear Part

	KEH-6000RDS		KEH-4000RDS	
	EW	X1B	EW	X1B
Mark No. Description	Part No.	Part No.	Part No.	Part No.
1 Case	NSP	·····	NSP	·····
Case	·····	NSP	·····	NSP
◉ 2 Quick Release Handle Assy	CXA3186	CXA3315	CXA3186	CXA3315
◉ 20 Key Board Unit	CWS1161	CWS1169	CWS1162	CWS1170
44 Heat Sink	NSP	·····	NSP	·····
Heat Sink	·····	NSP	·····	NSP
50 Insulator	NSP	·····	NSP	·····
Insulator	·····	NSP	·····	NSP
54 Cord Assy	CDE2618	CDE2840	CDE2745	CDE2839
63 Box	CNB1289	CNB1331	CNB1289	CNB1331
65 Cord Assy	CDE2241	CDE2842	CDE2744	CDE2838
◉ 66 FM/AM Tuner Unit	CWE1171	CWE1189	CWE1171	CWE1189
◉ 82 Tuner Amp Unit	CWM2181	CWM2186	CWM2179	CWM2188
Cap (AUX IN) Added	NSP	CNV1455	·····	·····
Cover (CD ACC) Added	NSP	CKX-003	·····	·····

www.manualscenter.com

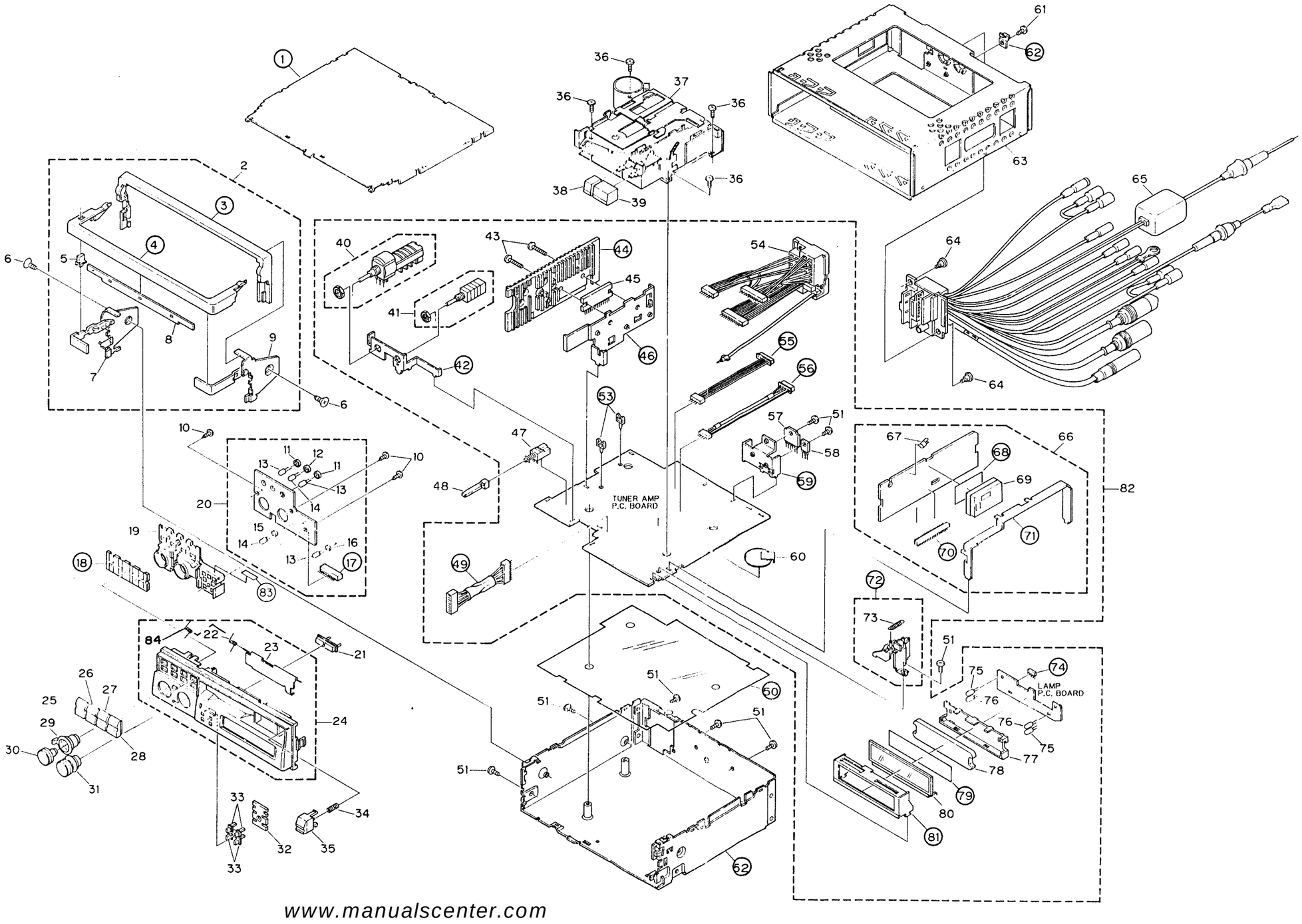

www.manualscenter.com

Fig. 15

15. CASSETTE MECHANISM ASSY EXPLODED VIEW

- **Parts List**

Mark No.	Description	Part No.
1	Motor Unit	EXA1033
2	Screw	EBA1008
3	Solenoid	EXP1001
4	·····	
5	·····	
6	Spring	EBH1056
7	Washer	CBF-166
8	Reel Unit	EXA1032
9	Screw	BMZ23P030FMC
10	Screw	BSZ23P040FMC
11	Bracket	
12	Screw	PMS26P025FUC
13	Cassette Holder	ENC1061
14	Spring	EBH1019
15	Screw	EBA1009
16	Collar	ELA1042
17	Arm	ENV1032
18	Arm	ENV1045
19	Washer	YE12FUC
20	Spring	EBH1038
21	Spring	EBH1012
22	Lever Unit	
23	Washer	YE15FUC
24	Washer	CBF-165
25	Spring	EBH1049
26	Arm	
27	Spring	EBH1060
28	Spring	EBH1066
29	Arm	ENC1046
30	Arm	
31	·····	
32	Arm	ENC1057
33	Spring	EBH1008
34	Arm Unit	
35	Washer	CBG1001
36	Washer	HBF-179
37	Flywheel(N)	ENV1029
38	Flywheel(R)	ENV1030
39	Belt	ENT1003
40	Roller	ELA1051
41	Frame Unit	EXA1025
42	Screw	PMS20P040FMC
43	Tape Guide	ENV1016
44	Spring	EBH1020
45	Lever	
46	Arm	
47	Spring	EBH1040
48	Spring	EBH1041
49	Spring	EBH1021
50	Lever	
51	Washer	EBE1001
52	Spring	EBH1009
53	Belt	ENT1009
54	Gear	ENV1034
55	Washer	CBF-135
56	Gear	ENV1050
57	Cover	
58	Screw	EBA1013
59	Screw	BMZ20P050FMC
60	Head	EPB1006
61	Spring	EBH1065
62	P.C.Board	ENP1012
63	Arm	
64	Head Base Unit	EXA1036
65	Spring	EBH1004
66	Spring	EBH1003
67	Cushion	CNV1667
68	Washer	YE20FUC
69	Pinch Roller Unit	EXA1034
70	Chassis Unit	
71	Washer	EBF1004
72	Pulley	ENV1009
73	Lever	
74	Spring	EBH1025
75	Spring	EBL1001
76	Pulley	ENV1010
77	Arm	
78	Screw	HBA-147
79	Gear	ENV1035
80	Collar	ELA1018
81	Arm	
82	Plug(5P)	
83	Gear	ENV1011
84	Arm	
85	Spring	EBH1024
86	Ratchet	
87	Spring	EBH1018
88	Pinch Roller Unit	EXA1035
89	Arm	
90	Lever	

www.manualscenter.com

• **Cassette Mechanism Assy**

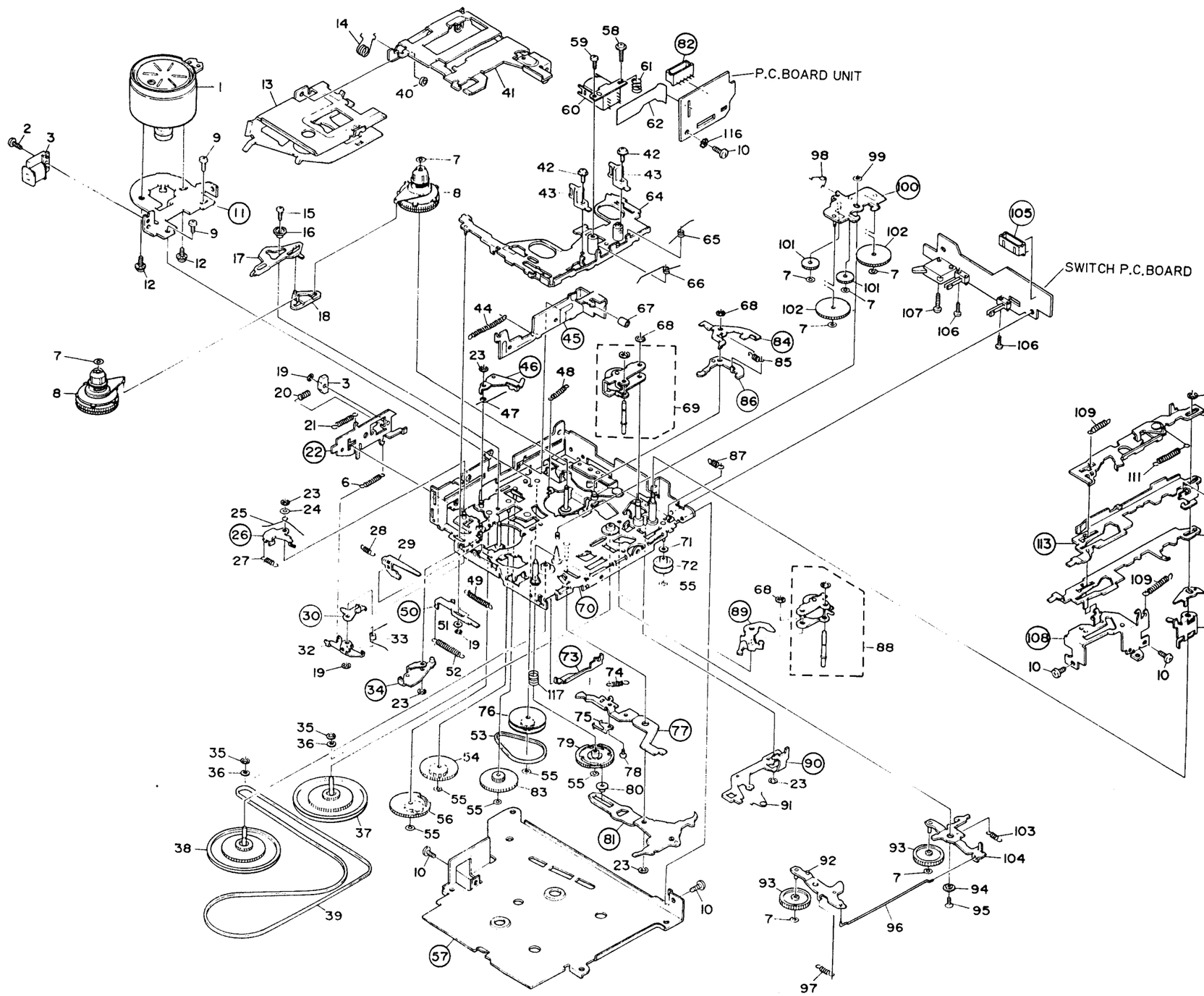

Mark No.	Description	Part No.
91	Spring	EBH1013
92	*	
93	Gear	ENV1043
94	Collar	ELA1032
95	Screw	HBA-212
96	Spring	EBH1007
97	Spring	EBH1006
98	Spring	EBH1058
99	Washer	EBF1005
100	Arm Unit	
101	Gear	ENV1018
102	Gear	ENV1017
103	Spring	EBH1022
104	Arm Unit	EXA1005
105	Plug(6P)	
106	Screw	EBA1017
107	Screw	BMZ20P070FMC
108	Bracket	
109	Spring	EBH1016
110	Lever Unit	
111	Spring	EBH1048
112	Spring	EBH1005
113	Lever	
114	Lever	
115	Arm	
116	Washer	WH23FMC
117	Spring	EBH1067

*)Number 92 is part of the chassis unit and cannot be removed.

www.manualscenter.com

Fig. 16

16. PACKING METHOD

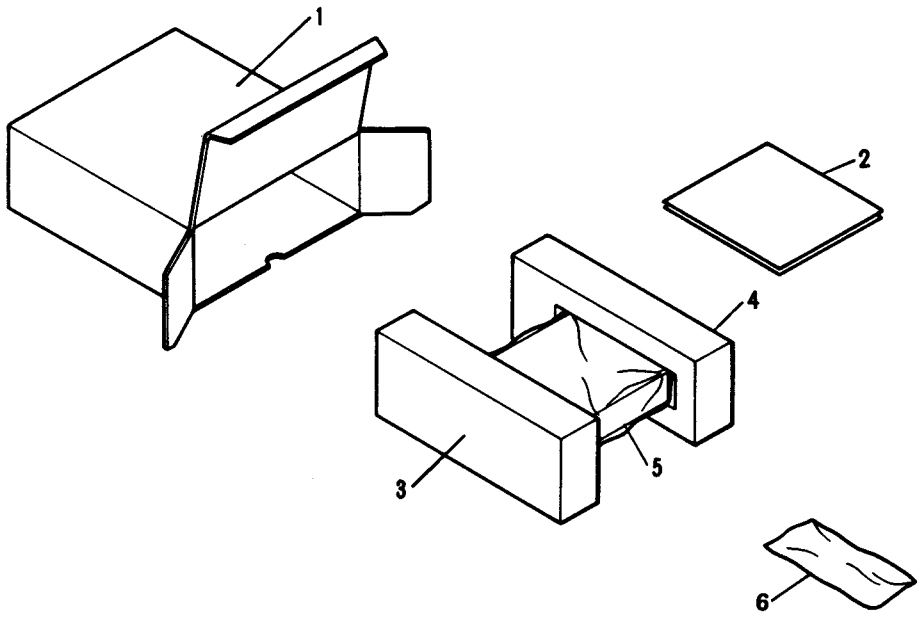

www.manualscenter.com

Fig. 17

• Parts List

NSP:No Spear Part

Mark No.	Description	KEH-6000RDS EW Part No.	KEH-6000RDS X1B Part No.	KEH-4000RDS EW Part No.	KEH-4000RDS X1B Part No.
1	Carton	CHG1726	CHG1767	CHG1727	CHG1768
*2-1	Owner's Manual	CRD1345	CRD1353	CRD1345	CRD1353
**2-2	Owner's Manual	CRB1158	·····	CRB1158	·····
2-3	Installation Manual	CRD1369	·····	CRD1370	·····
2-4	Card	NSP	·····	NSP	·····
	Card	·····	NSP	·····	NSP
2-5	Caution Card	NSP	·····	NSP	·····
	Caution Card	·····	NSP	·····	NSP
2-6	Caution Card	NSP	·····	NSP	·····
2-7	Passport	NSP	·····	NSP	·····
3	Styrofoam	CHP1257	CHP1263	CHP1257	CHP1263
4	Styrofoam	CHP1258	CHP1264	CHP1258	CHP1264
5	Cover	CEG-236	CEG-173	CEG-236	CEG-173
6	Accessory Assy	CEA1471	CEA1488	CEA1471	CEA1488
6-1	Screw(×1)	CBA-102	CBA-102	CBA-102	CBA-102
6-2	Screw(×1)	CBA1002	CBA1002	CBA1002	CBA1002
6-3	Strap	CNF-111	·····	CNF-111	·····
	Bracket	·····	NSP	·····	NSP
6-4	Nut(×2)	NF50FMC	NF50FMC	NF50FMC	NF50FMC
6-5	Bush	CNV1009	CNV1009	CNV1009	CNV1009

*2-1 Owner's Manual

Part No.	Model	Language
CRD1345	KEH-6000RDS/EW, KEH-4000RDS/EW	English, French, German, Spanish, Swedish, Norwegian, Dutch, Finnish
CRD1353	KEH-6000RDS/X1B, KEH-4000RDS/X1B	English, French, Italian

**2-2 Owner's Manual

Part No.	Model	Language
CRB1158	KEH-6000RDS/EW, KEH-4000RDS/EW	Italian

www.manualscenter.com

17. ELECTRICAL PARTS LIST

NOTE;

- ***Parts whose parts numbers are omitted are subject to being not supplied.***
- ***The part numbers shown below indicate chip components.***

  Chip Resistor

  RS1/8S □□□J, RS1/10S □□□J

  Chip Capacitor (except for CQS.....)

  CKS....., CCS....., CSZS.....

Unit Number :
Unit Name : FM/AM Tuner Unit

MISCELLANEOUS

Mark	Circuit Symbol & No.	Part Name	Part No.
IC	51		PA4012
IC	201		PA4010
Q	1	Chip Transistor	2SA1162
Q	2	Chip Transistor	DTC124EK
Q	51	Chip Transistor	DTA114TK
Q	101	Chip Transistor	2SD1819
Q	201		2SK435
Q	202	Chip Transistor	2SC2412K
Q	203 205	Chip Transistor	DTC124EK
D	201 204	Chip Diode	MA157-MR
D	205	Variable Capacitance Diode	SVC203-AB
L	1 51	Inductor	CTF1104
L	2	Inductor	CTF1086
L	101	Inductor	CTF1126
L	201	Inductor	CTF1084
L	203	Ferri-Inductor	LAU220K
L	204	Ferri-Inductor	LAU470K
L	205	Ferri-Inductor	LAU4R7K
L	206	Ferri-Inductor	CTF-157
T	51	Coil	CTE1021
T	52	Coil	CTE1022
T	201	Coil	CTB1020
T	202	Coil	CTB1004
T	203	Coil	CTB1040
T	204	Coil	CTE1025
T	205	Coil	CTE1026
T	206	Coil	CTE1027
CG	1		DSP-201M
TH	51 102	Thermister	DTN-T204D154K
CF	51 52	Filter	CTF1057
CF	201	Ceramic Filter	CTF1041
CF	202	Filter	CTF1085
X	151	Ceramic Resonator	CSS1055
X	201	Crystal Resonator	CSS1057
VR	1	Semi-fixed 10kΩ (B)	VRTB4VS103
VR	51 101 102	Semi-fixed 33kΩ (B)	VRTB4VS333
		FM Front End	CWB1035

RESISTORS

Mark	Circuit Symbol & No.	Part Name	Part No.
R	2		RS1/10S223J
R	3		RS1/10S124J
R	4		RS1/10S682J
R	5 13 63		RS1/10S0R0J
R	6 59 101		RS1/10S331J
R	7		RS1/10S102J
R	10		RS1/10S560J
R	54		RS1/10S472J
R	56 58 104		RS1/10S393J
R	57		RS1/10S562J
R	60		RS1/10S473J
R	61 105		RS1/10S332J
R	64		RS1/10S222J
R	102		RS1/10S822J
R	106		RS1/10S333J
R	107		RS1/10S102J
R	108		RS1/10S104J
R	111		RS1/10S123J
R	112		RS1/10S684J
R	151 152 153		RS1/10S222J
R	201		RS1/10S220J
R	202		RS1/10S681J
R	203 206 214		RS1/10S222J
R	204 213		RS1/10S473J
R	205 209		RS1/10S470J
R	207		RS1/10S822J
R	208 211 212		RS1/10S103J
R	210		RS1/10S682J
R	215		RS1/10S153J

CAPACITORS

Mark	Circuit Symbol & No.	Part Name	Part No.
C	1		CKSQYB472K50
C	2 3 104		CKSQYB103K50
C	4 51 59		CKSQYF473Z25
C	52 53		CKSQYB223K25
C	54		CCSQSL101J50
C	55		CKSQYB102K50
C	56		CKSQYF104Z25
C	57		CEAR33M50LS2
C	58		CCSQCH060D50
C	60		CEALNP100M6R3

www.manualscenter.com

Mark	Circuit Symbol & No.	Part Name	Part No.
	C 101		CKSQYB822K50
	C 102		CKSQYB682K50
	C 103		CKSQYB392K50
	C 105		CEA2R2M50LL
	C 106		CEA220M6R3LL
	C 107 108		CKSQYB222K50
	C 110		CEA010M50LL
	C 111		CEA100M16LL
	C 112		CEA0R1M50LL
	C 151 152		CKSQYB273K25
	C 153		CSZAR47M35L
	C 154 155 156		CEA3R3M50LL
	C 157		CEA101M10LS
	C 201 223 228		CKSQYB103K25
	C 202 212		CKSQYB332K50
	C 203 215 216 219 226		CKSQYF473Z25
	C 204 208 210		CKSQYB223K25
	C 205		CCSQCH220J50
	C 206 207		CCSQCH820J50
	C 211		CEA2R2M50LL
	C 213		CCSQCH390J50
	C 218		CEA2R2M35NPLL
	C 220		CCSQCH430J50
	C 221		CCSQCH100D50
	C 222		CSZA010K35L
	C 224		CEA470M16LL
	C 225		CKSQYB333K25
	C 227		CEA4R7M35LS
	C 229		CEA470M16LS
	C 230		CEA220M16LL

Tuner Amp Unit
Consists of • Tuner Amp P.C.Board • Lamp P.C.Board • FM/AM Tuner Unit

Unit Number :
Unit Name : Tuner Amp Unit(KEH-6000RDS)

MISCELLANEOUS

Mark	Circuit Symbol & No.	Part Name	Part No.
	IC 251		TA8162SN
	IC 281		AN6263N
	IC 301		HA12134FP
	IC 351 451		NJM4558M
	IC 501		M74HC4066FP
	IC 551		TA8215L
	IC 601		TA8214K
	IC 701		PD4214
	IC 702		LC3517BSL-15
	IC 703		HD61602RJ
	IC 801		PM4002
	IC 802		LC7071NM
	IC 803		BA1604F
	Q 281 301 302 619 956 968 969	Chip Transistor	DTC124EK
	Q 361 362 363 403 701 703 704	Chip Transistor	2SC2712
	Q 401 402	Chip Transistor	2SC3326
	Q 404 503 505 602 605 606 608 702		2SC2458
	Q 501	Chip Transistor	DTC114EK
	Q 502 504		2SK330
	Q 506	Chip Transistor	2SC3098
	Q 601 623		2SB1243
	Q 603		2SD1864
	Q 604 614 615 617 618		2SB1238
	Q 607 621 853 854		2SA1048
	Q 609		DTA124ES
	Q 610		2SC1740S
	Q 613		2SC3421
	Q 616	Chip Transistor	DTC143EK
	Q 620 761		2SC3113
	Q 622 965 966		DTC144ES
	Q 624		DTA144EK
	Q 762 807	Chip Transistor	DTC144EK
	Q 763 805 806 851 852	Chip Transistor	2SC2712
	Q 855 856	Chip Transistor	2SA1162
	Q 951 952		2SC2458
	Q 953 957	Chip Transistor	DTA124EK
	Q 954 955 958 959 960 961		DTC143TS
	Q 967	Chip Transistor	2SD1757K
	D 251 351 352 361 362 701 702 703 704	Chip Diode	MA110-1A
	D 363	Chip Diode	MA151WA-MN
	D 401 604	Chip Diode	MA8075M
	D 501 502	Chip Diode	MA8027H
	D 601		ERC04-02E
	D 602 609 951		ERA15-02VH
	D 603 605	Chip Diode	MA8056H
	D 606 607		ERA15-10VH
	D 608	Chip Diode	MA728-2A
	D 709 851 953 954	Chip Diode	MA110-1A
	D 761	Chip Diode	MA151WK-MT
	D 852	Chip Diode	MA8039L
	D 952	Chip Diode	MA8082M
	L 502 703	Ferri-Inductor	LAU2R2M
	L 701 702 801	Ferri-Inductor	LAU101K
	X 701	Crystal Resonator	CSS1011
	X 801	Crystal Resonator	CSS1056
	X 802	Ceramic Resonator	CSS-042
	S 451	Switch(LOUD)	CSG-207
	IL 906 907	Lamp 8V 60mA	CEL1137
	IL 908 909	Lamp 8V 60mA	CEL1116
	VR 301 302	Semi-fixed 33kΩ (B)	VRT16VS 333
	VR 451	Volume 50kΩ (B) × 2	CCS1152
	VR 452/S 601	Volume/Switch 50kΩ (W), 20kΩ (N), 20kΩ (B), 200Ω	CCS1111
	VR 761	Semi-fixed 150kΩ (B)	VRT16VS 154
	VR 801	Semi-fixed 33kΩ (B)	CCP1049
	VR 802	Semi-fixed 100kΩ (B)	CCP1052
	B 701	Battery	CEX1008
		LCD	CAW1098
		FM/AM Tuner Unit	

www.manualscenter.com

RESISTORS

Mark	Circuit Symbol & No.	Part Name	Part No.
R	251 252 623 624		RS1/10S104J
R	253 254		RS1/10S181J
R	255 256 304 357 766 877 878		RS1/10S183J
R	257 258 463 738		RS1/10S133J
R	259 260		RS1/10S334J
R	262 502 769 805		RS1/10S104J
R	263 264 368 369 471 514 767 770 814		RS1/10S222J
R	281 282 474 475		RS1/10S822J
R	283		RS1/10S684J
R	284 520 780		RS1/10S101J
R	303 403 404 881 882 953 954 955		RS1/10S223J
R	305 306 351 352 464 513 603 604 609		RS1/10S103J
R	307 308 453 454 611 808		RS1/10S332J
R	309 518		RS1/10S101J
R	310 353 354 405 406 610 613 722		RS1/10S473J
R	355 356 855 856		RS1/10S124J
R	364 365 472 503 504 761 951 952		RS1/10S222J
R	367 455 456		RS1/10S153J
R	401 507 515 714 715 716 717 718 723		RS1/10S102J
R	402 615 740 741 742 744 747 748 752 753		RS1/10S473J
R	407		RS1/8S222J
R	451 452		RS1/10S153J
R	457 458 620 621 625		RS1/10S332J
R	459 460 461 462 465 466 505 510 511 711		RS1/10S102J
R	473		RS1/10S133J
R	506 854		RS1/10S152J
R	508 521 605 608 614 619 622 806 888		RS1/10S472J
R	509 771 819 851 874 883 884		RS1/10S102J
R	516		RS1/10S331J
R	517		RS1/10S182J
R	519		RS1/10S821J
R	522		RD1/4PM475J
R	551 552		RS1/10S331J
R	553 554 555 556 557 558 559 560		RS1/8S100J
R	561 562		RS1/10S474J
R	601 606 607 612 735 736 737 746 762 803		RS1/10S223J
R	616 763		RS1/10S221J
R	617 618		RS1/10S272J
R	626 628 764 807 887		RS1/10S103J
R	627 629 630 631		RS1/8S681J
R	712 713 724 725 726 727 728 729 730		RS1/10S102J
R	731 732 733 745 772 773 775 777 810		RS1/10S102J
R	739		RS1/10S334J
R	749		RS1/10S563J
R	754 755 756 757 758 759 760 765 779		RS1/10S473J
R	776 957 960		RS1/10S392J
R	778		RS1/10S222J
R	781 853		RS1/10S152J
R	782		RS1/10S0R0J
R	804		RS1/10S184J
R	809		RS1/10S681J
R	815 958		RS1/10S223J
R	817 959		RS1/10S472J
R	821 852 873		RS1/10S102J
R	857 858 875 876		RS1/10S473J
R	859 860		RS1/10S471J
R	879 880		RS1/10S821J
R	886		RS1/10S561J

CAPACITORS

Mark	Circuit Symbol & No.	Part Name	Part No.
C	251 252		CKSQYB681K50
C	253 254 309 820		CEA470M16LS
C	255 256 281		CKSQYB103K50
C	259 283		CEA101M10LS
C	260 312 403 459 819 857 858 859		CEA100M16LS2
C	261		CEA4R7M35L2
C	282		CCSQSL330J50
C	284		CEA0R1M50LS2
C	303 304 310 954		CEA010M50LS2
C	305 306		CEAR22M50LS2
C	307 308		CEALNP100M16
C	311 602 611 951		CEA220M16LS
C	351 352		CEALNP2R2M35
C	353 354		CCSQCH150J50
C	401 402 457 458 551 552 851 852		CEA4R7M35LS
C	451 452 813 814		CCSQCH270J50
C	453 454 803 804		CKSQYB332K50
C	455 456 810		CKSQYB333K25
C	461 462		CKSQYB272K50
C	463 464		CEAR33M50LS2
C	507 509 511 618 761 762 763 767 808		CKSQYB103K50
C	508 4.7μF/16V		CCH1005
C	510		CQEA474J63
C	512 513		CCSQSL101J50
C	514 553 554		CCSQSL681J50
C	515		CEAR47M50LS2
C	516 766 806		CKSQYB473K25
C	517 603 608 613 615 765		CKSQYF473Z50
C	555 556 605 606		CEA470M16L2
C	557 558 559 560		CQEA224J63
C	561		CEA101M10L2
C	601		CEA471M16L2
C	607		CEA331M10L2
C	609		CEA100M16L2
C	610 719 855 856 952		CKSQYB102K50
C	614		CEA220M16L2
C	616		CKSYB472K50
C	617		CEA221M16L2
C	619		CEA472M16L2
C	705 706 825		CCSQCH100D50
C	707 708 709 710 711		CKSYF334Z25
C	713 715		CEANL220M16LL
C	714 716		CKSQYF473Z50
C	717		CEA150M10LS
C	718		CEA010M50L2
C	764		CEAR22M50LS2
C	768 809		CKSQYB223K50
C	769 823 860		CKSQYB102K50
C	801 802		CKSQYB472K50
C	805		CSZA2R2M16L

www.manualscenter.com

Mark	Circuit Symbol & No.	Part Name	Part No.
	C 807		CKSQYB223K50
	C 811		CKSYB104K25
	C 812		CKSYB683K25
	C 817 818		CCSQCH330J50
	C 821		CSZSR15M35
	C 824		CKSQYB332K50
	C 853 854		CEALNP4R7M16
	C 861		CEA221M10L2
	C 953		CEA2R2M50L2

Unit Number :
Unit Name : Tuner Amp Unit(KEH-4000RDS)

MISCELLANEOUS

Mark	Circuit Symbol & No.	Part Name	Part No.
	IC 251		TA8162SN
	IC 281		AN6263N
	IC 301		HA12134FP
	IC 351 451		NJM4558M
	IC 501		M74HC4066FP
	IC 551		TA8215L
	IC 601		TA8214K
	IC 701		PD4214
	IC 702		LC3517BSL-15
	IC 703		HD61602RJ
	IC 801		PM4002
	IC 802		LC7071NM
	IC 803		BA1604F
Q	281 301 302 956 968 969	Chip Transistor	DTC124EK
Q	361 362 363 701 703 704	Chip Transistor	2SC2712
Q	501	Chip Transistor	DTC114EK
Q	502 504		2SK330
Q	503 505 602 605 606 702		2SC2458
Q	506	Chip Transistor	2SC3098
Q	601 623		2SB1243
Q	603		2SD1864
Q	604		2SB1238
Q	607		2SA1048
Q	610		2SC1740S
Q	613		2SC3421
Q	622		DTC144ES
Q	624		DTA144EK
Q	761		2SC3113
Q	762 807	Chip Transistor	DTC144EK
Q	763 805 806	Chip Transistor	2SC2712
Q	951 952		2SC2458
Q	957	Chip Transistor	DTA124EK
Q	958 959 960 961		DTC143TS
Q	967	Chip Transistor	2SD1757K
D	251 351 352 361 362 701 702 703 704	Chip Diode	MA110-1A
D	363	Chip Diode	MA151WA-MN
D	501 502	Chip Diode	MA8027H
D	601		ERC04-02E
D	602 951		ERA15-02VH
D	603 605	Chip Diode	MA8056H
D	604	Chip Diode	MA8075M
D	606 607		ERA15-10VH
D	608	Chip Diode	MA728-2A
D	705 708 709 953 954	Chip Diode	MA110-1A
D	761	Chip Diode	MA151WK-MT
D	952	Chip Diode	MA8082M
L	502 703	Ferri-Inductor	LAU2R2M
L	701 702 801	Ferri-Inductor	LAU101K
X	701	Crystal Resonator	CSS1011
X	801	Crystal Resonator	CSS1056
X	802	Ceramic Resonator	CSS-042
S	451	Switch(LOUD)	CSG-207
IL	906 907	Lamp 8V 60mA	CEL1137
VR	301 302	Semi-fixed 33kΩ (B)	VRT86VS333
VR	451	Volume 50kΩ (B) × 2	CCS1152
VR	452/S 601	Volume/Switch 50kΩ (W), 20kΩ (B), 200Ω	CCS1113
VR	761	Semi-fixed 150kΩ (B)	VRT86VS154
VR	801	Semi-fixed 33kΩ (B)	CCP1049
VR	802	Semi-fixed 100kΩ (B)	CCP1052
B	701	Battery	CEX1008
		LCD	CAW1098
		FM/AM Tuner Unit	

RESISTORS

Mark	Circuit Symbol & No.	Part Name	Part No.
R	251 252		RS1/10S104J
R	253 254		RS1/10S181J
R	255 256 304 357 766		RS1/10S183J
R	257 258 463 738		RS1/10S133J
R	259 260		RS1/10S334J
R	262 502 769 805		RS1/10S104J
R	263 264 368 369 471 514 767 770 814		RS1/10S222J
R	281 282		RS1/10S822J
R	283		RS1/10S684J
R	284 520 780		RS1/10S101J
R	303 953 954 955		RS1/10S223J
R	305 306 351 352 464 513 603 604 609		RS1/10S103J
R	307 308 453 454 611 808		RS1/10S332J
R	309 518		RS1/10S101J
R	310 353 354 610 722		RS1/10S473J
R	355 356		RS1/10S124J
R	364 365 472 503 504 761 951 952		RS1/10S222J
R	367 455 456		RS1/10S153J
R	451 452		RS1/10S153J
R	457 458		RS1/10S332J
R	459 460 461 462 465 466 505 510 511 711		RS1/11S102J
R	473		RS1/11S133J
R	474 475		RS1/11S472J
R	506		RS1/11S152J
R	507 515 714 715 716 717 718 723		RS1/11S102J
R	508 521 605 608 614 806 888		RS1/11S472J
R	509 771 819		RS1/11S102J
R	516		RS1/11S331J
R	517		RS1/11S182J
R	519		RS1/11S821J

www.manualscenter.com

Mark	Circuit Symbol & No.	Part Name	Part No.
R	522		RD1/4PM475J
R	551 552		RS1/10S331J
R	553 554 555 556 557 558 559 560		RS1/8S100J
R	561 562		RS1/10S474J
R	601 606 607 612 735 736 737 746 762 803		RS1/10S223J
R	615 740 741 742 744 747 752 753		RS1/10S473J
R	616 763		RS1/10S221J
R	627 629 630 631		RS1/8S681J
R	628 764 807		RS1/10S103J
R	632 633		RS1/8S0R0J
R	712 713 724 725 726 727 728 729 730		RS1/10S102J
R	731 732 733 745 772 773 775 777 810		RS1/10S102J
R	739		RS1/10S334J
R	749		RS1/10S563J
R	754 755 756 757 758 759 760 765 779		RS1/10S473J
R	776 957 960		RS1/10S392J
R	778		RS1/10S222J
R	781		RS1/10S152J
R	804		RS1/10S184J
R	809		RS1/10S681J
R	815 958		RS1/10S223J
R	817 959		RS1/10S472J
R	821		RS1/10S102J

CAPACITORS

Mark	Circuit Symbol & No.	Part Name	Part No.
C	251 252		CKSQYB681K50
C	253 254 309 820		CEA470M16LS
C	255 256 281		CKSQYB103K50
C	259 283		CEA101M10LS
C	260 312 459 819		CEA100M16LS2
C	261		CEA4R7M35L2
C	282		CCSQSL330J50
C	284		CEA0R1M50LS2
C	303 304 310 954		CEA010M50LS2
C	305 306		CEAR22M50LS2
C	307 308		CEALNP100M16
C	311 602 611 951		CEA220M16LS
C	351 352		CEALNP2R2M35
C	353 354		CCSQCH150J50
C	451 452 813 814		CCSQCH270J50
C	453 454 803 804		CKSQYB332K50
C	455 456 810		CKSQYB333K25
C	457 458 551 552		CEA4R7M35LS
C	461 462		CKSQYB272K50
C	463 464		CEAR33M50LS2
C	507 509 511 618 761 762 763 767 808		CKSQYB103K50
C	508	4.7μF/16V	CCH1005
C	510		CQEA474J63
C	512 513		CCSQSL101J50
C	514 553 554		CCSQSL681J50
C	515		CEAR47M50LS2
C	516 766 806		CKSQYB473K25
C	517 603 608 613 615 765		CKSQYF473Z50
C	555 556 605 606		CEA470M16L2
C	557 558 559 560		CQEA224J63
C	561		CEA101M10L2
C	601		CEA471M16L2
C	607		CEA331M10L2
C	609		CEA100M16L2
C	614		CEA220M16L2
C	616		CKSYB472K50
C	617		CEA221M16L2
C	619		CEA472M16L2
C	705 706 825		CCSQCH100D50
C	707 708 709 710 711		CKSYF334Z25
C	713 715		CEANL220M16LL
C	714 716		CKSQYF473Z50
C	717		CEAR15M10LS
C	718		CEA010M50L2
C	719 952		CKSQYB102K50
C	764		CEAR22M50LS2
C	768 809		CKSQYB223K50
C	769 823		CKSQYB102K50
C	801 802		CKSQYB472K50
C	805		CSZA2R2M16L
C	807		CKSQYB223K50
C	811		CKSYB104K25
C	812		CKSYB683K25
C	817 818		CCSQCH330J50
C	821		CSZSR15M35
C	824		CKSQYB332K50
C	953		CEA2R2M50L2

Unit Number :
Unit Name : Key Board Unit(KEH-6000RDS)

Mark	Circuit Symbol & No.	Part Name	Part No.
IL	901 902 903	Lamp 14V 40mA	CEL-147
IL	904 905	Lamp 14V 40mA	CEL1013
S	901 902 903 904 905 906 907 908 909 910	Switch	CSG-253
S	911 912 913 914 915	Switch	CSG-253

Unit Number :
Unit Name : Key Board Unit(KEH-4000RDS)

Mark	Circuit Symbol & No.	Part Name	Part No.
IL	904 905	Lamp 14V 40mA	CEL1013
S	901 902 903 904 905 906 907 908 909 910	Switch	CSG-253
S	911 912 913 914 915	Switch	CSG-253

Unit Number :
Unit Name : Switch P.C.Board

Mark	Circuit Symbol & No.	Part Name	Part No.
D	1		F1SR35-100A
S	1 2	Switch(MUTE.MOTOR)	ESN1001
S	3	Switch(TAPE/TUNER)	HSK-126

www.manualscenter.com

Unit Number :
Unit Name : P.C.Board Unit

Mark	Circuit Symbol & No.	Part Name	Part No.
S	1	Switch(FWD/REV)	ESH1002

Miscellaneous Parts List

Mark	Circuit Symbol & No.	Part Name	Part No.
HD	1	Head	EPB1006
M	1	Motor Unit	EXA1033
SO	1	Solenoid	EXP1001

www.manualscenter.com

PIONEER

Service Manual

ORDER NO.
CRT 1094

CASSETTE MECHANISM ASSEMBLY

CX-166

- This service manual is for cassette mechanism assembly used in car stereo components.
- Refer to the service manual for individual models for details on sections other than the cassette mechanism assembly.

	Model	Service Manual	Model	Service Manual
With music search	KE-3050/ES	CRT1088		
	KE-3080/EW			
	KE-3080SDK/WG			
	KE-3050QR/UC	CRT1089		

	Model	Service manual	Model	Service Manual
Without music search	KP-3120/EW, ES	CRT1085	KP-4440/UC, ES	CRT1092
	KP-3130/EW		KP-5011/US	
	KP-3120SDK/WG		KP-5550/UC, ES	
	KPH-4120/EW, ES	CRT1086		
	KPH-4130/EW			
	KPH-4120SDK/WG			
	KE-3020/ES	CRT1087		
	KE-3030/EW			
	KE-3030SDK/WG			
	KE-2222/UC, ES	CRT1090		
	KE-2515/US			
	KE-3011/US			
	KE-3232/UC, ES			

www.manualscenter.com

CONTENTS

1. DISASSEMBLY 1
2. MECHANISM DESCRIPTION 3
3. ADJUSTMENT 11
4. CIRCUIT DIAGRAM & PATTERNS 13

PIONEER ELECTRONIC CORPORATION 4-1, Meguro 1-Chome, Meguro-ku, Tokyo 153, Japan
PIONEER ELECTRONICS SERVICE INC. P.O. Box 1760, Long Beach, California 90801 U.S.A. TEL: (213) 420-5700
PIONEER ELECTRONIC (EUROPE) N.V. Keetberglaan 1, 2740 Beveren, Belgium TEL: 03/775·28·08
PIONEER ELECTRONICS AUSTRALIA PTY. LTD. 178-184 Boundary Road, Braeside, Victoria 3195, Australia TEL: (03) 580-9911

FS © DEC. 1986 Printed in Japan

1. DISASSEMBLY

Note: Always use new washer and E-washer at the time of reassembling.

- **Dismounting the Cassette Holder (Fig. 1)**

(1) Make the claw straight.
(2) Remove the spring.
(3) The cassette holder is gripped at 2 points, shown by arrows. So, shift it toward the left and pull it out from above.

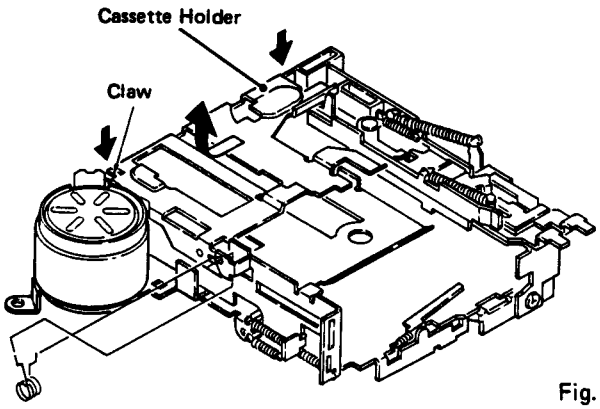

Fig. 1

- **Dismounting the Reel Unit (Fig. 2)**

(1) Take off the washer.
(2) Remove the reel unit.

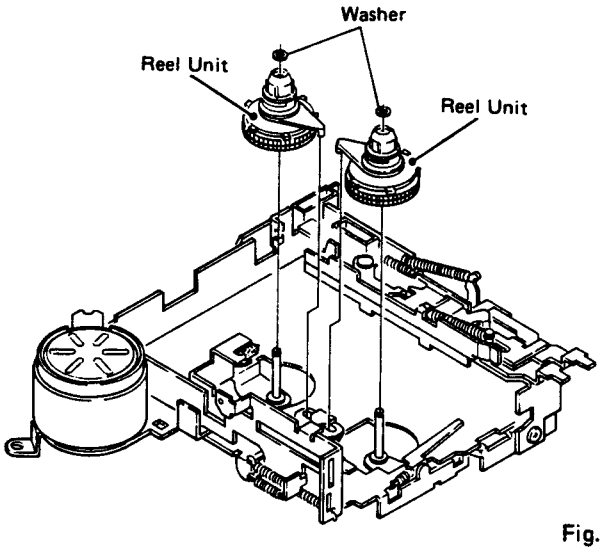

Fig. 2

- **Dismounting the Flywheels (Fig. 3)**

(1) Take off the E-washer. Retain washer properly to ensure it doesn't get lost.
(2) Remove the flywheels. Do not mistake the N and R flywheels (otherwise tape speed would change).

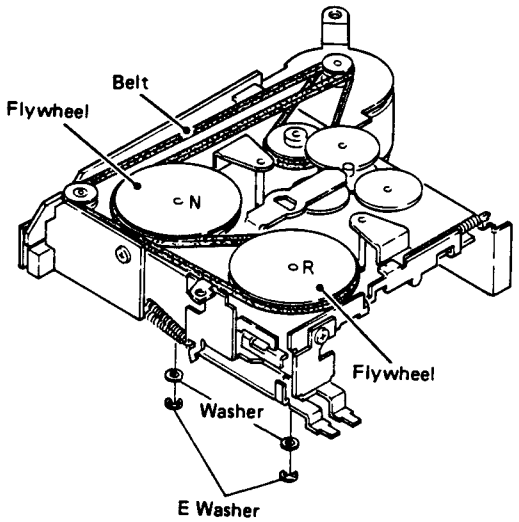

Fig. 3

www.manualscenter.com

• Dismounting the Head (Fig. 4, 5)

(1) Remove the P.C. board unit, after taking off its fastening screw.
Note: Take care not to change the setting of FWD/REV switch of P.C. board.

(2) Remove the 3 springs.
(3) Take off E-washer.
(4) Remove the lever unit (EJ).

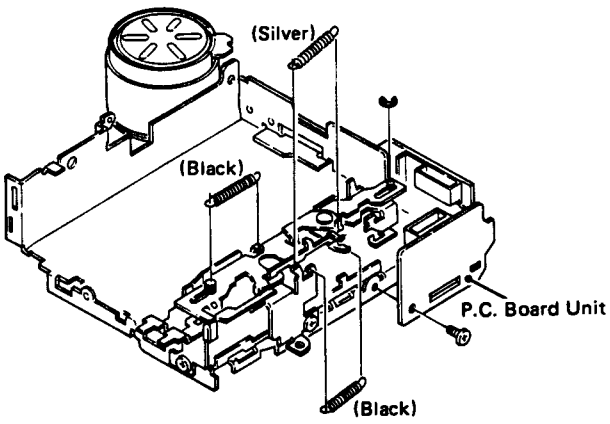

Fig. 4

(5) Take off the lever (FF). When reassembling, make sure that the spring comes in front of arm unit.
(6) Take off lever (REW).
(7) Remove the head after taking off its 2 retaining screws.
Note: The head can be dismounted, even without taking off the levers given in above steps (5) & (6).

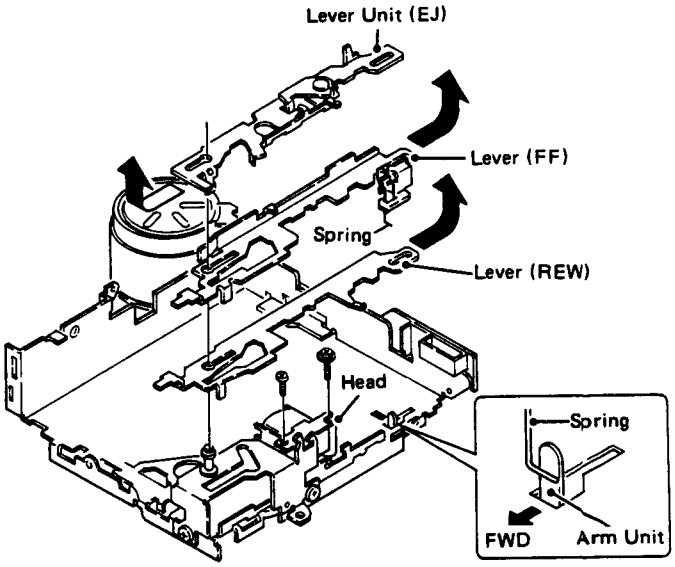

Fig. 5

• Dismounting the FWD Pinch Roller (Fig. 6)

(1) Remove E-washer & spring, and then take off the FWD pinch roller.

• Dismounting the REV Pinch Roller (Fig. 6)

(1) Remove the 2 retaining screws, and then take off the bracket unit, taking care not to hit against the protrusion.
(2) Take off E-washer & spring, and remove the REV pinch roller.

www.manualscenter.com

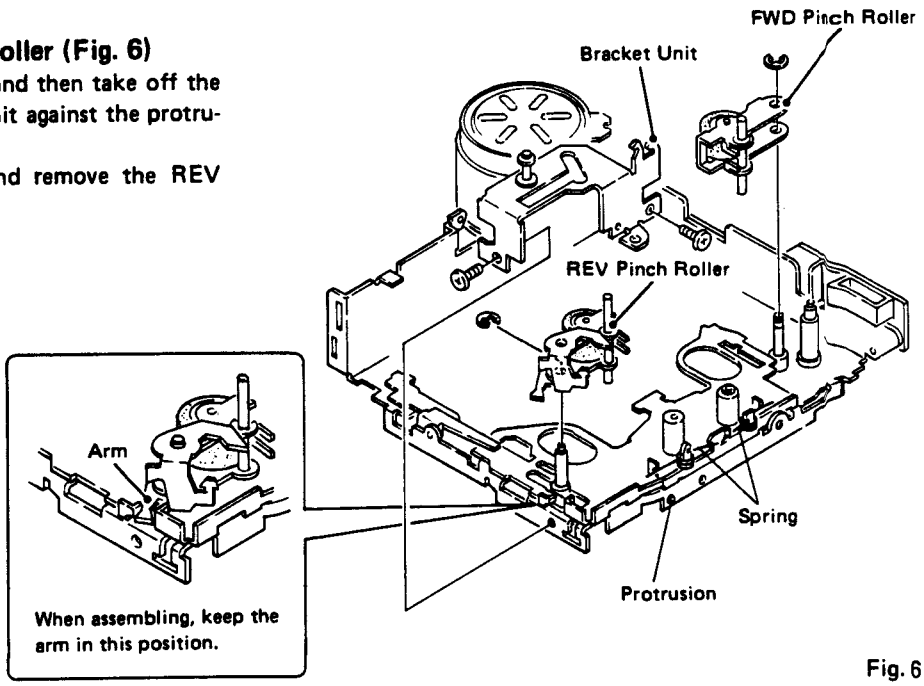

Fig. 6

2. MECHANISM DESCRIPTION

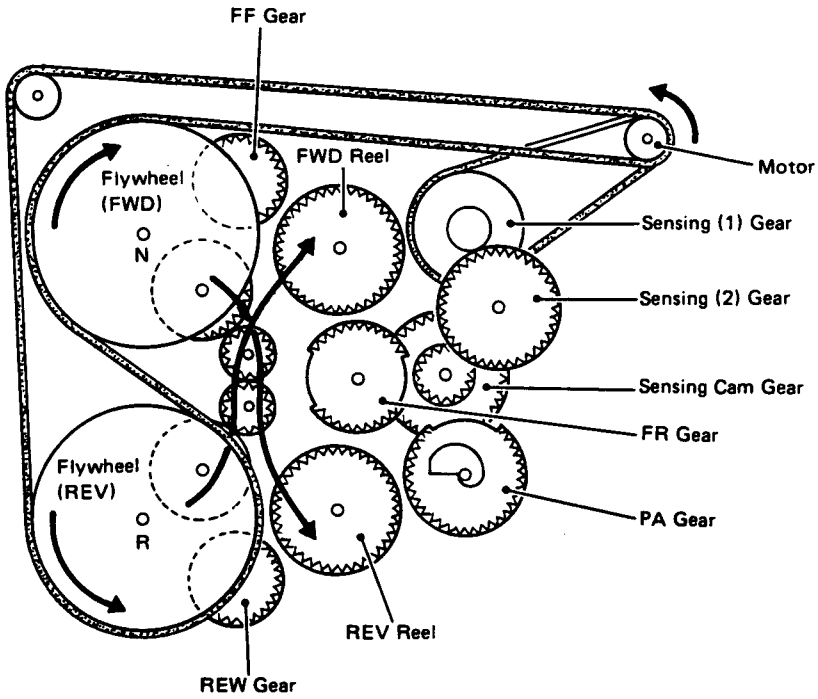

Fig. 7 Transmission of turning force at the time of PLAY (Flywheel →Reel)

• Loading & Playing the Cassette Tape

(1) When a cassette tape is inserted, a lever pushes against an arm, which then turns ON the motor and tape/tuner (tape side) switches, in this given order.

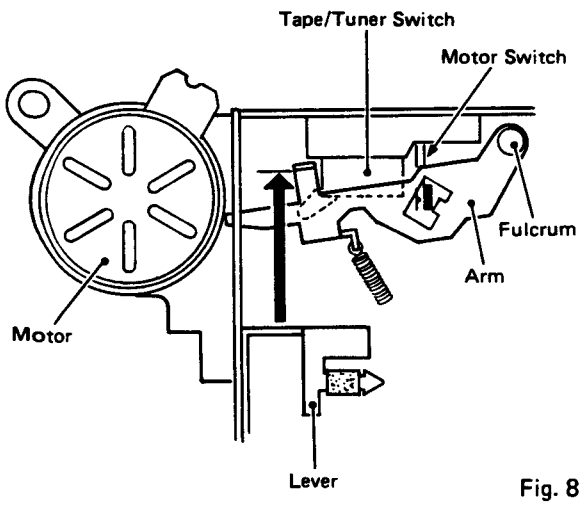

Fig. 8

(2) When a cassette tape is set, the arm of Fig. 9 (collision preventing) gets depressed, putting the head base in forward movable state.

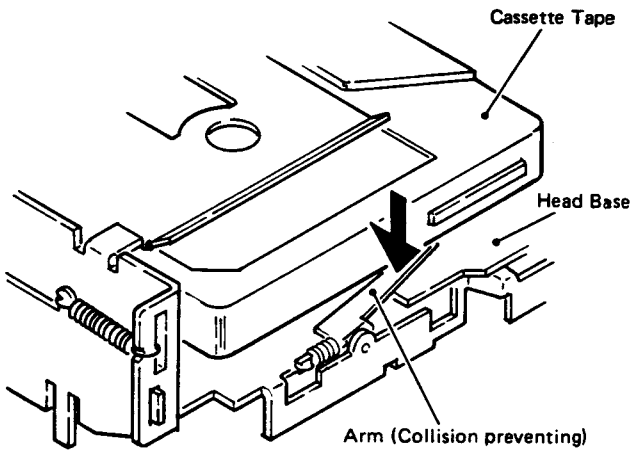

Fig. 9

www.manualscenter.com

(3) As motor switch turns ON, the motor starts running, transmitting its rotations toward the arrow direction shown in the Fig. 10. As a result, flywheel (FWD) runs forward and flywheel (REV) runs backward.

(4) REW gear then transmits the rotations of flywheel (REV) to REV reel, putting the mechanism in REW state and eliminating tape slackening (ATSC). At this time, the FWD reel is locked by the ratchet mentioned in step (14).

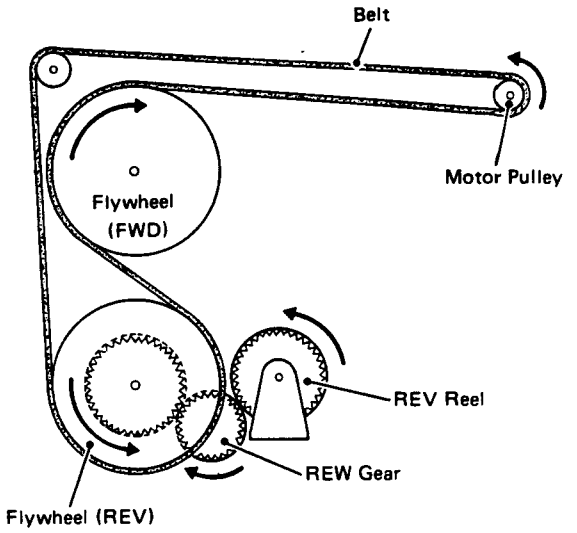

Fig. 10

(5) In Fig. 11, the reel arms of FWD & REV reels are engaged on the sensing arm. A slight friction causes the reel arms to get locked onto the reels. While REV reel is rotating, the reel arms and sensing lever keep shifting laterally along the arrow direction ① of Fig. 11. Right side movement of the reel arm is caused by the rotation of REV reel; while the left side movement is caused by protrusion of the sensing lever through the inner groove of sensing cam gear.

(6) REV reel stops as soon as tape slackening is eliminated (the gear of reel is driven by REW gear).

(7) As soon as the reel stops, the operation of above step (5) sends the reel arm toward the left. Consequently, the protrusion of sensing lever moves along the orbit of dotted line, causing the sensing lever to get pushed by cam and move along arrow ②.

(8) Sensing lever turns the ATSC lock arm along the direction of arrow ③ .

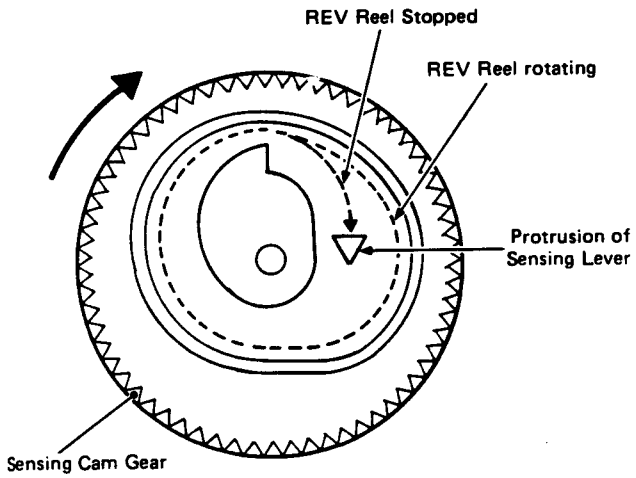

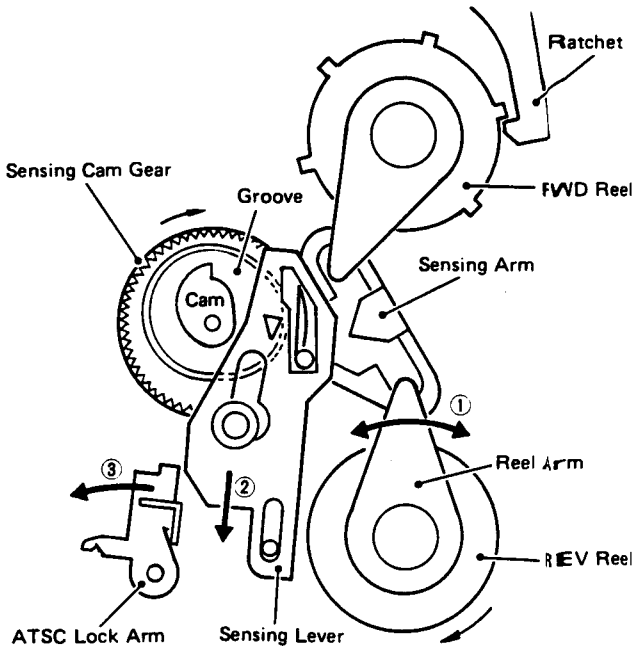

www.manualscenter.com

Fig. 11

(9) In ejected state, PA gear remains locked by ATSC lock arm, as shown in Fig. 13. The force along arrow ③ caused by the operation of above step (8), releases the lock if PA gear, whereupon the PA gear is made to rotate slightly along arrow ④ by the gear driving spring. As a result, the PA gear engages with sensing cam gear, and proceeds to turn through 1 more rotation. The cam of PA gear then causes the HD drawing arm and key-off lock arm to move along arrow ⑤ . The HD drawing arm pushes against a lever, and a spring attached to the lever causes the head base to shift along arrow ⑥

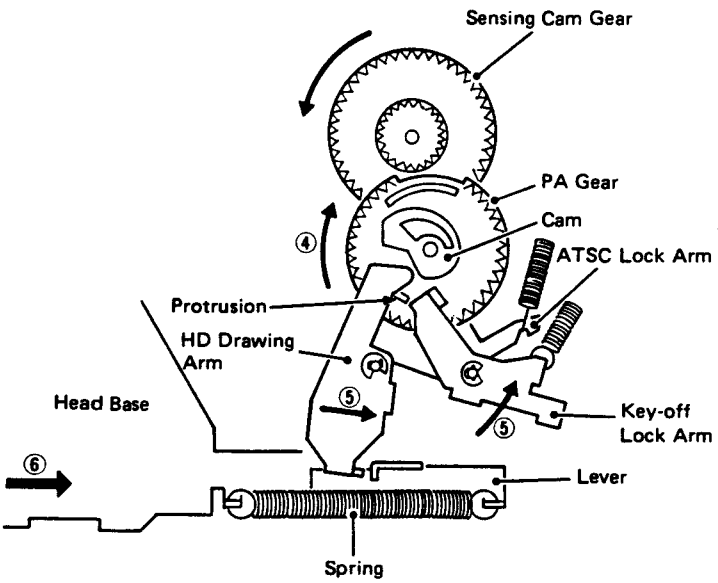

Fig. 12

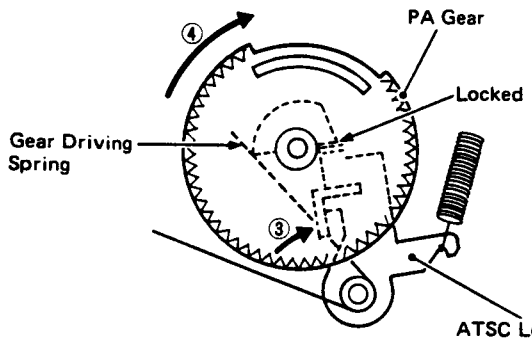

Fig. 13

www.manualscenter.com

(10) With Music Search (MS) (Fig. 14)

The key-off lock arm is pushed toward the outer periphery of PA gear by its cam. As a result, the key-off lock lever shifts along the direction of arrow ⑦ , and the tip of solenoid attached at the end of lock lever is pulled in and gets locked into the solenoid (the solenoid is turned by motor switch).

Without MS (Fig. 15)

The key-off lock arm is pushed toward the outer periphery of PA gear.

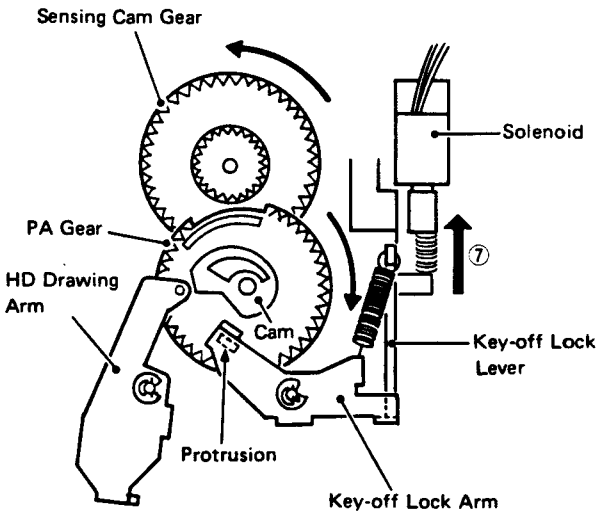

Fig. 14 Stopped state after turning through about 1 rotation (with MS)

(11) The key-off lock arm engages on the protrusion of PA gear, and concurrently the turning force of sensing cam gear is lost at the no-teeth part PA gear, causing the PA gear to halt.

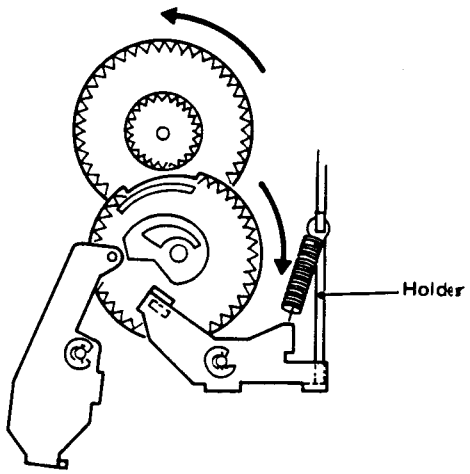

Fig. 15 Stopped state after turning through about 1 rotation (without MS)

(12)Through a lever & spring, the HD drawing arm causes the head base to shift along the direction of arrow ⑥, in turn drawing out the HD. This movement of head base is accompanied by the following operation.

(13)The spring A attached to head base causes the pinch roller to begin movement.

(14)Point A of head base shifts the ratchet along arrow direction ⑧, causing the FWD reel to get detached from it.

(15)As the FWD pinch roller runs forward, arm A moves along the direction of arrow ⑨, causing arm B to get locked on FWD reel.

(16)Point C of head base pushes against the pin of REW gear, disengaging the REW gear from REV reel.

(17)Point B of head base pushes arm B along arrow direction ⑩, making the FWD reel free.

(18)Spring A causes either the FWD or REV pinch roller to contact the capstan, depending on the existing status (FWD PLAY or REV PLAY) before the mechanism came to halt.

(19)As point D of head base pushes against arm unit (idler), the play gear engages onto either the FWD or REV reel, depending on the existing status before the mechanism to halt.

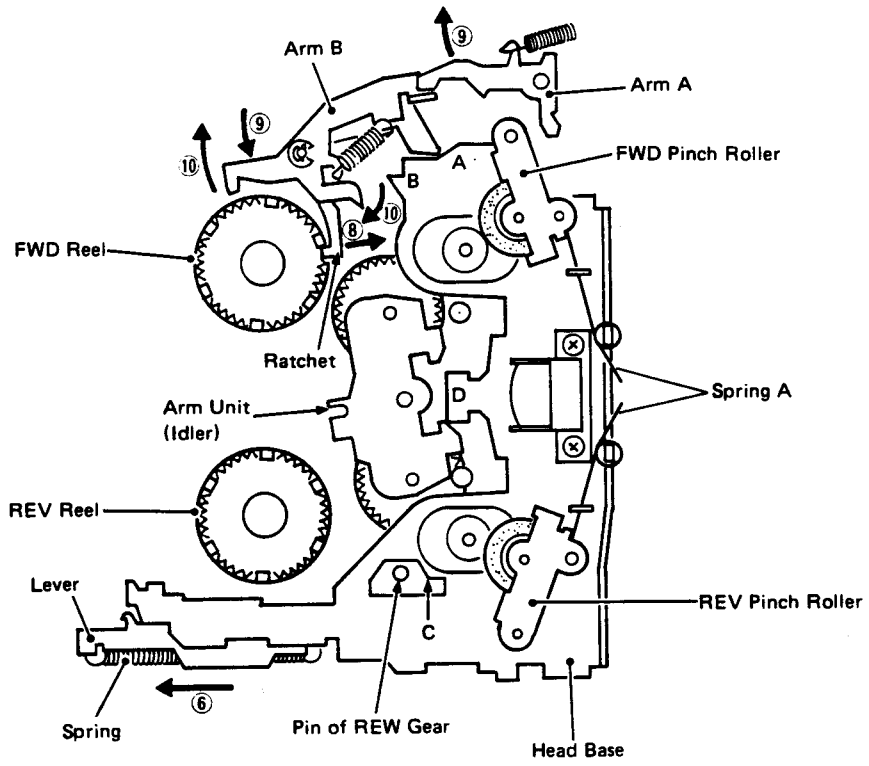

Fig. 16

www.manualscenter.com

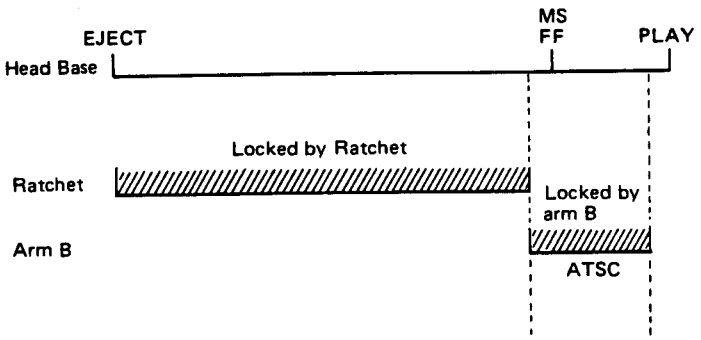

Fig. 17 FWD Reel locking timing

• Sensing Operation (Fig. 18, 19, 20)

○ Auto

1. While playing, since the sensing lever shifts laterally as given in above step (5), the cam of sensing cam gear never pushes against the sensing lever. Upon reaching the end of tape, the cam pushes against sensing lever, and point E goes in to push the arm along arrow direction ⑪.
2. The arm contacts the stopper of FR gear to stop the gear from running. Since the FR gear receives the force along arrow direction ⑫ of spring A, through REV pinch roller & arm (FR), it always tends to rotate along arrow direction ⑬.
3. As soon as the arm disengages from stopper in above step 1, the FR gear engages with sensing cam gear, causing the arm to rotate until contacting the opposite side stopper.
4. The rotation of FR gear sends the arm (FR) toward arrow direction ⑭, in turn switching over the pinch rollers. This switch over is done by the movement of arm (FR), including that of the arm unit (idler) also.

○ Manual

1. When the manual direction switch over lever of Fig. 18 is pushed, the arm moves along arrow direction ⑪. Further operation is identical to that in auto.
2. If the manual direction switch over lever is held pushed, the inner protrusion of FR gear as shown in Fig. 19 contacts spring B of the arm, and stops after turning through half rotation.

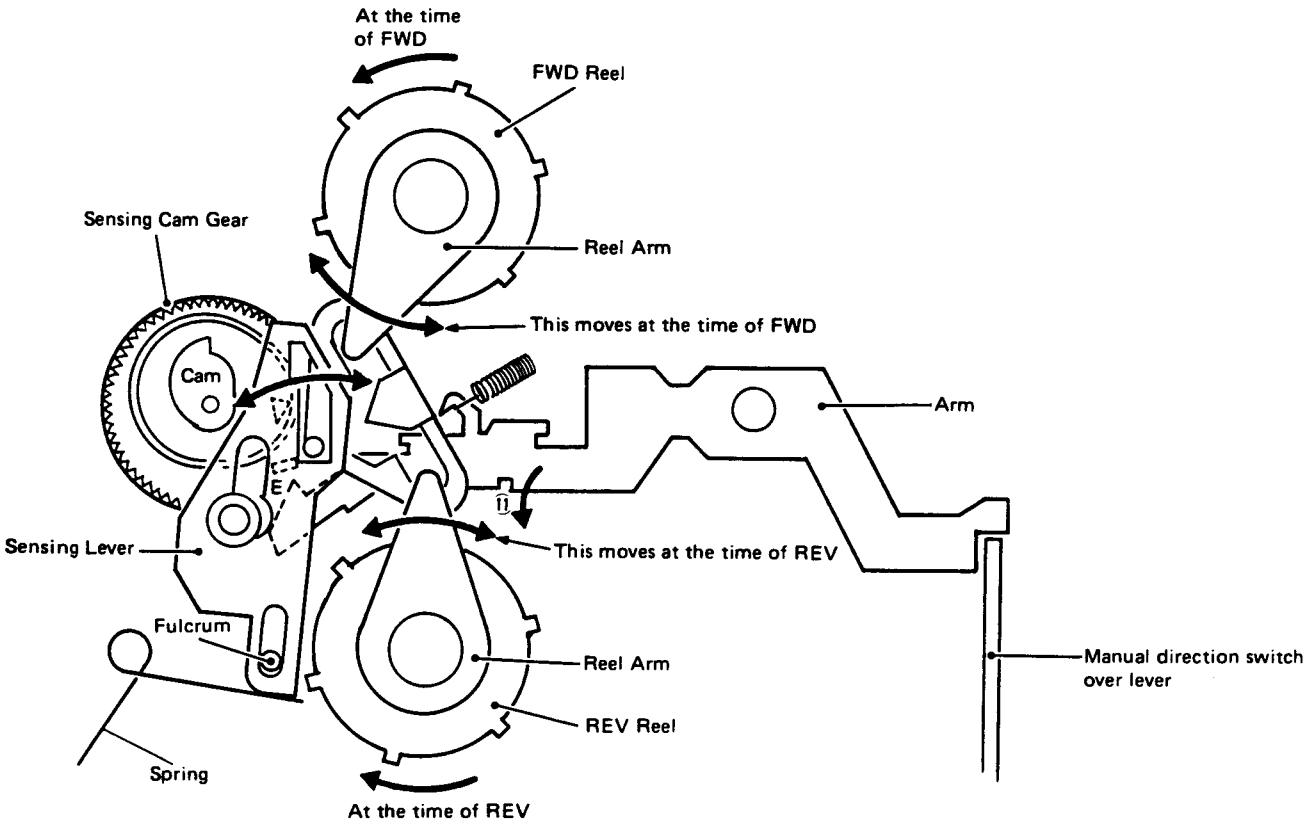

Fig. 18

www.manualscenter.com

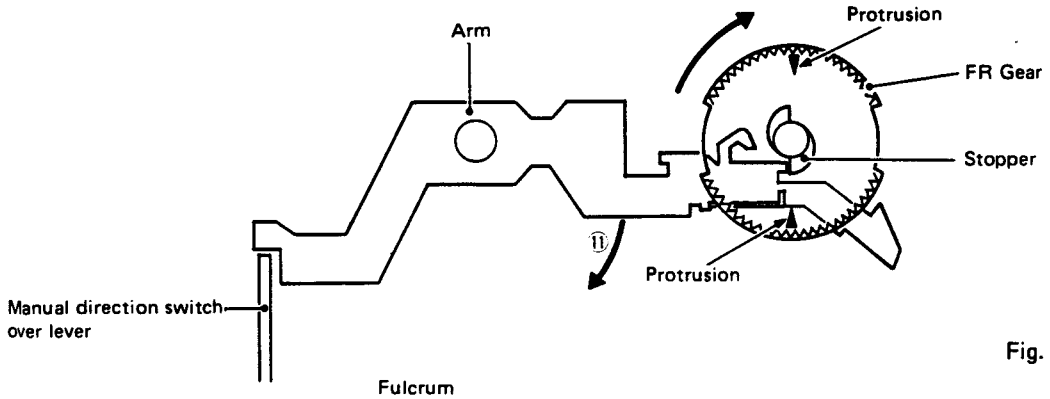

Fig. 19

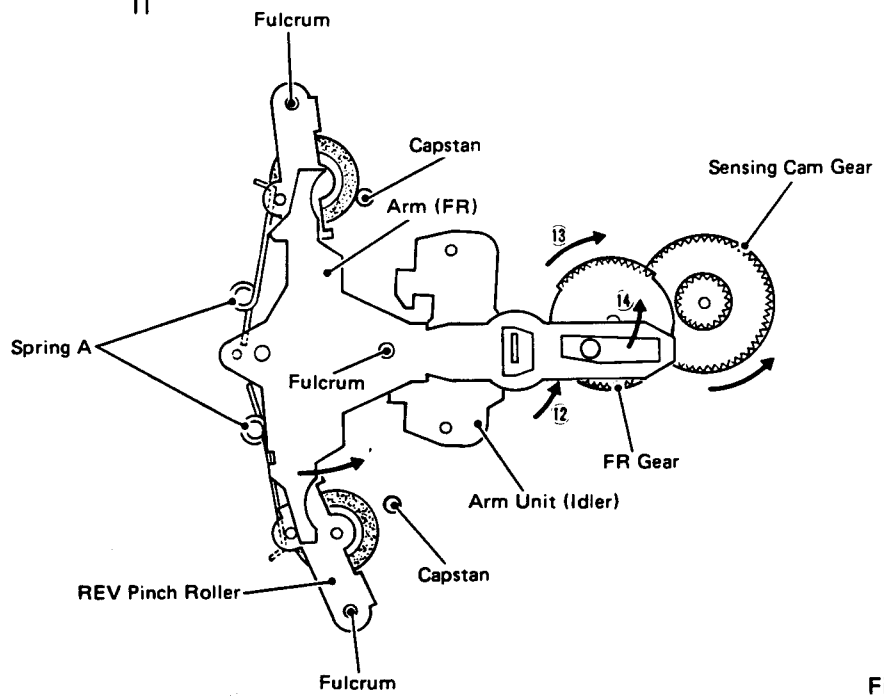

Fig. 20

- **Sensing release Mechanism (when drawing out the Head)**

1. If the sensing lever is held pushed by sensing cam gear until the head is drawn out, after the lock of PA gear has been released by it, FWD/REV switch over takes place.

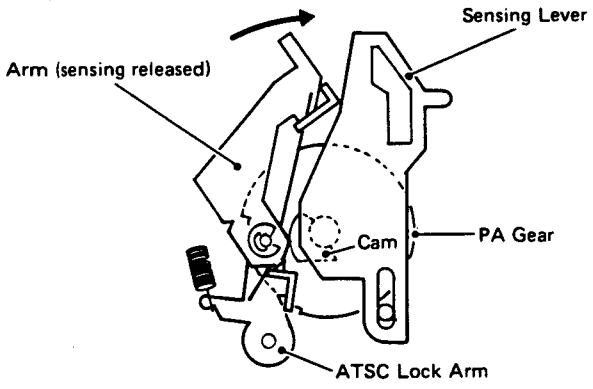

Fig. 21 Drawing out the HD (Sensing released)

2. To prevent this, the arm (sensing released) is held pushed toward arrow direction, by the cam of PA gear, through ATSC lock arm, as shown in Fig. 21. This prevents FWD/REV switch over by keeping the cam of sensing cam gear away from the sensing lever.

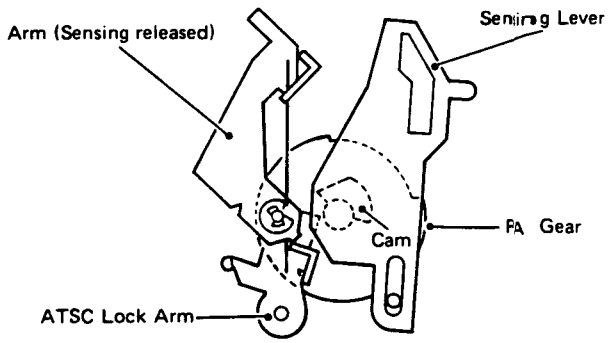

Fig. 22 At the time of PLAY (Sensing operation)

www.manualscenter.com

- **FF/REW Mechanism (when running FWD)**

1. When FF, REW lever is pushed, arm D causes the head base to return upto FF/REW position. The lever makes arm C to rotate along arrow direction ⑫ , which then turns ON the mute switch. When pushed further, it gets locked by arm C.
2. The returning of head base also causes the arm unit (idler) to return, and the play gear is detached from the reel.
3. When REW lever is pushed, the head base returns, causing the pin of REW gear also to return to original position, whereby the flywheel (REV), REW gear, and REV reel get engaged together, instating REW mode.
4. When FF lever is pushed, the arm unit (FF) gets pressed, causing the flywheel (FWD), FWD reel, and FF gear to get engaged, again instating FF mode. At this time, REW gear detaches from REV reel and flywheel (REV) due to spring tension.
5. At the time of MS operation, the solenoid turns from OFF to ON while in FF/REW state, and play mode is instated as the head base in returned.

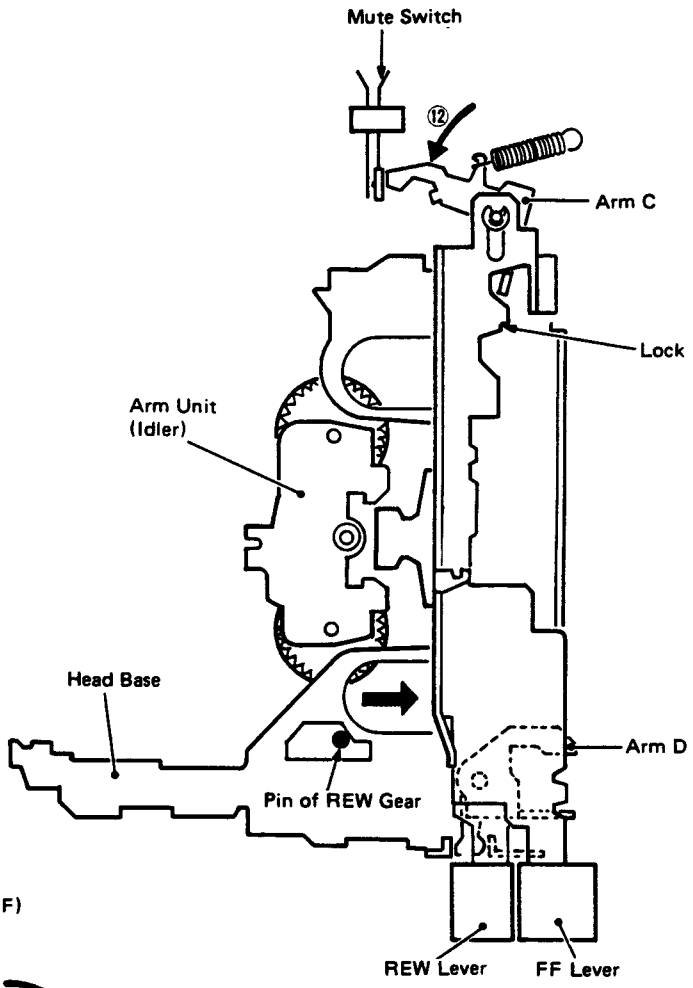

Fig. 23

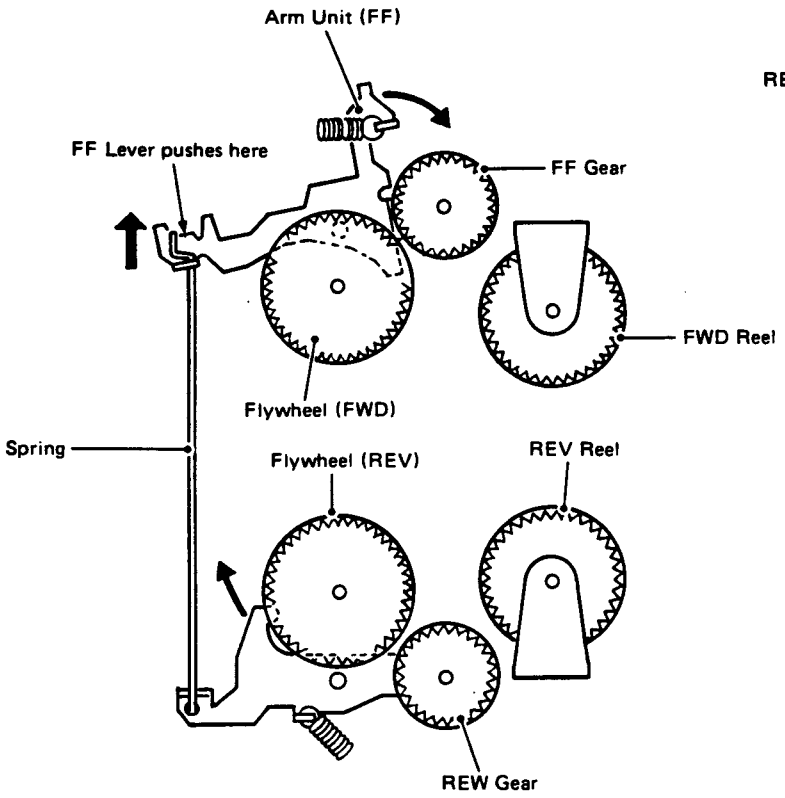

Fig. 24 At the time of FF

www.manualscenter.com

• EJECT

1. If FF, REW levers are concurrently pushed, the arm gets caught at point F, sending the lever toward arrow direction.
2. Point G pushes against the arm of Fig. 23, causing the head base to return back.
3. As the head base returns, arm E of Fig. 26 moves along arrow direction ⑬, in turn pushing the key-off lock arm. Thereby, the lock of PA gear gets released, and play state is cancelled.
4. Point H of the lever of Fig. 25 pushes against the cassette holder to eject the cassette tape.

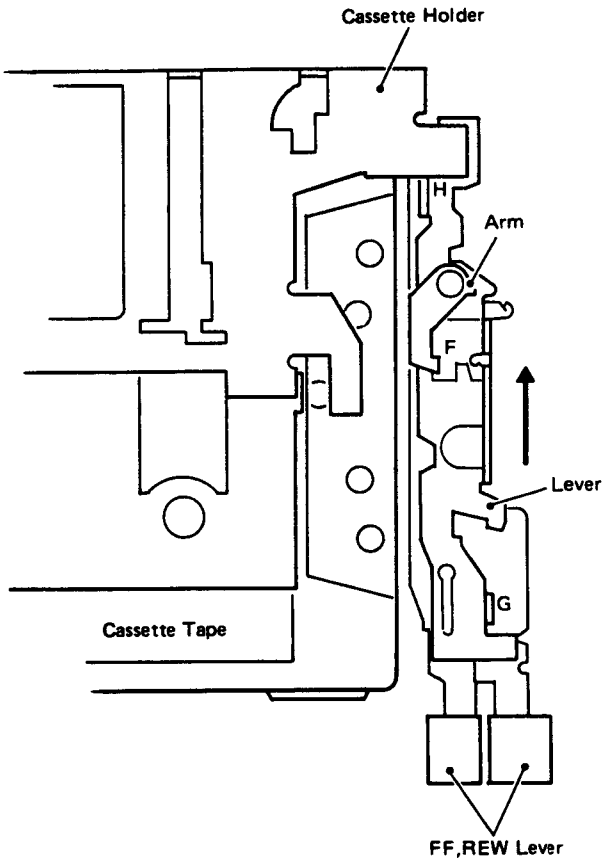

Fig. 25

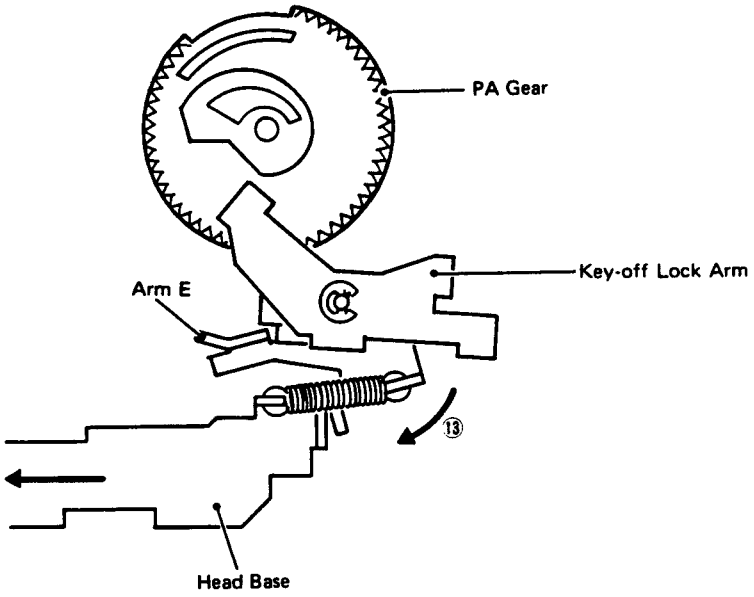

Fig. 26

www.manualscenter.com

3. ADJUSTMENT

3.1 AZIMUTH ADJUSTMENT (Fig. 27)

- **To Adjust**

1. Play "A" side of STD-341A (10kHz, –20dB). Adjust each screw for maximum output in forward and reverse directions.
2. Play "B" side in forward and reverse directions to confirm adjustment.

3.2 TAPE SPEED ADJUSTMENT (Fig. 27)

- **To Adjust**

1. Reproduce STD-301 (3kHz, –10dB). Adjust the semi-fixed resistor so that the frequency counter shows 3,010Hz (+30Hz, –30Hz).

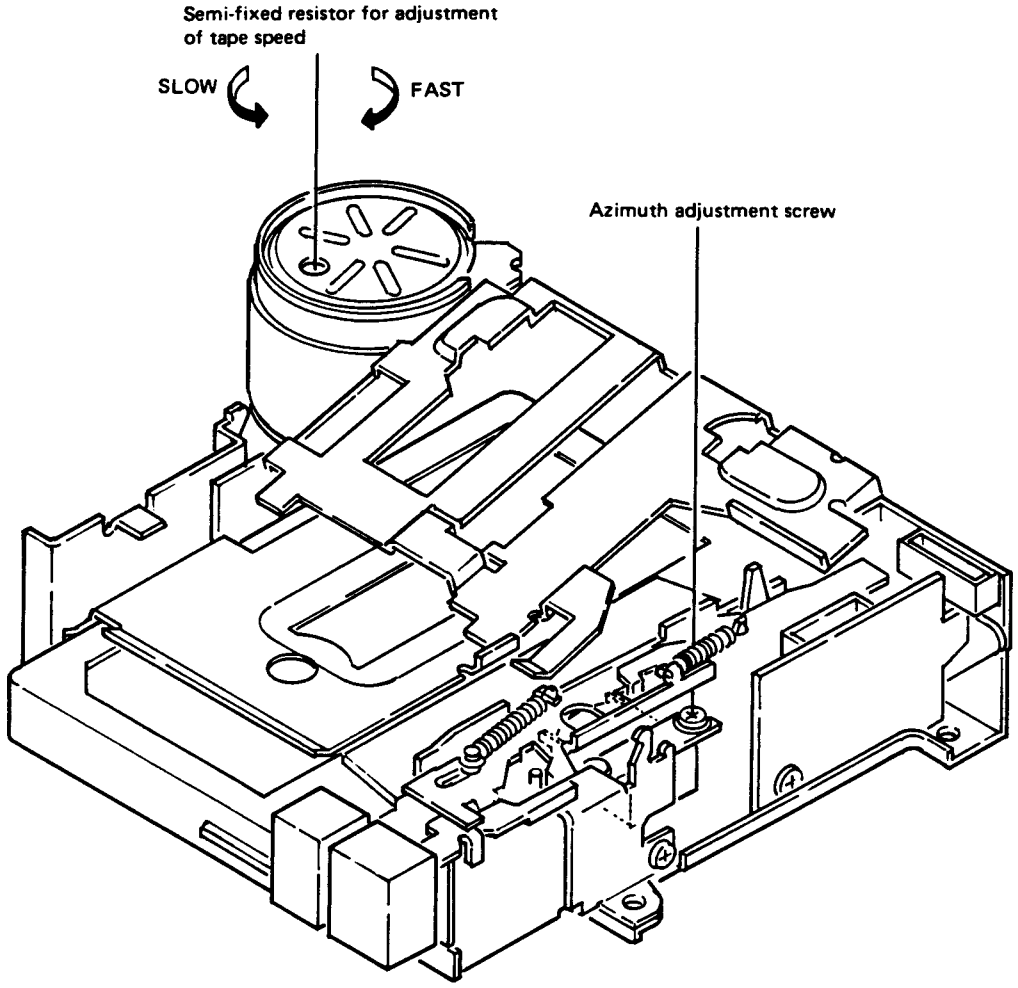

Fig. 27

www.manualscenter.com

3.3 CHECK POINTS OF CASSETTE MECHANISM

Confirm the following items when replacing parts of the cassette mechanism.	■ Tape speed deviation: 3,000 $^{+90}_{-30}$ Hz (4.76cm/s $^{+3}_{-1}$ %) Using an STD-301, measure the speed at the start and end of winding and take the maximum value. Measuring time shall be 5 ∿ 6 seconds.	■ Wow and flutter: Less than 0.20% (WRMS) Using an STD-301, measure the wow and flutter at the start and end of winding and take the maximum value. If values indicated by the pointer vary considerably, adjust to 70% of the minimum and maximum values. Measuring time shall be 5 ∿ 6 seconds.
■ Fast forward and rewinding time: 95∿115 seconds Using a C-60, set to fast forward and rewind, and measure the time with a stop watch.	■ Winding torque: 39∿65g•cm 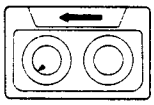 Using a cassette type torque meter (100 g•cm), measure the minimum value while in the play mode. Measuring time shall be 5 ∿ 6 seconds.	■ F.F. torque: 110∿70g•cm 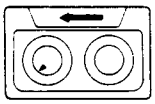 Using a cassette type torque meter (120 g•cm), measure the value when the tape stops in the F.F. mode.
■ REW torque: 110∿70g•cm 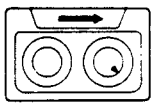 Using a cassette type torque meter (120 g•cm), measure the value when the tape stops in the REW mode.	■ Back tension torque: 2∿6g•cm 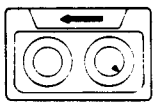 After setting in the REW mode without loading a cassette tape for 5 minutes, measure the back tension torque in the play mode, using a cassette type torque meter.	■ Cassette loading force: Less than 1.5kg Push the center of the cassette and measure the force with a tension meter (3 kg).
■ Eject force: Less than 4kg Using a tension meter (5 kg), measure eject force from play mode to point at which cassette is ejected.		

www.manualscenter.com

4. CIRCUIT DIAGRAM & PATTERNS

- **Without MS**

P.C. BOARD UNIT

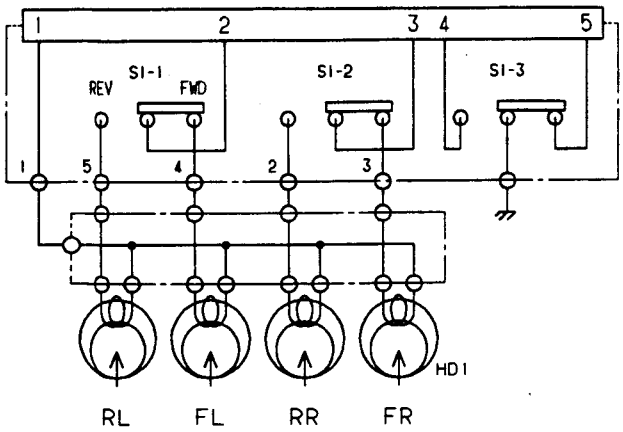

SWITCH P.C. BOARD

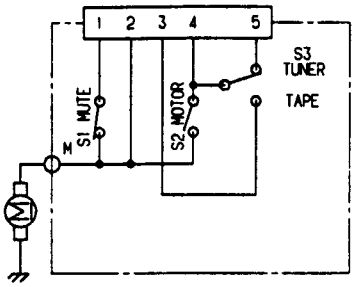

P.C. BOARD UNIT

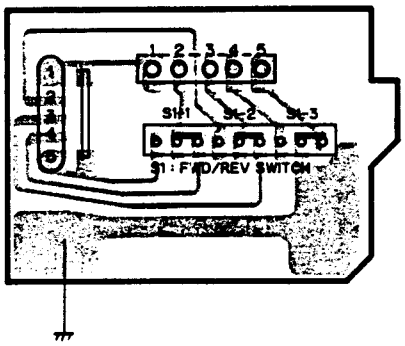

SWITCH P.C. BOARD

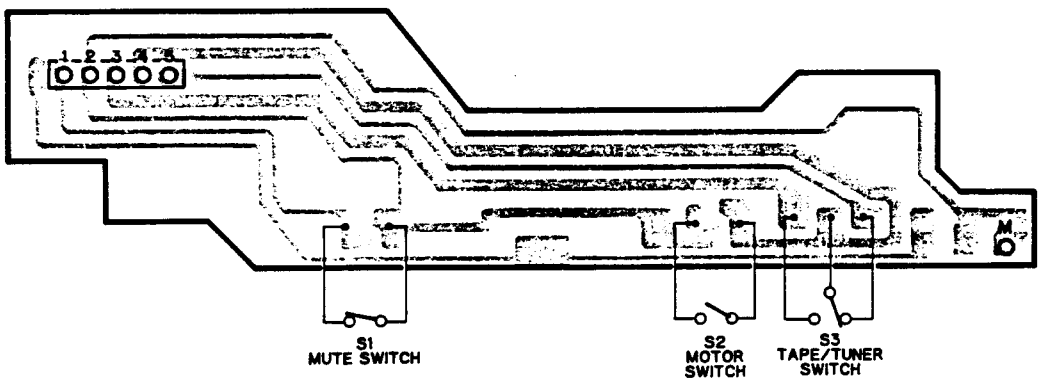

www.manualscenter.com

- **With MS**

P.C. BOARD UNIT

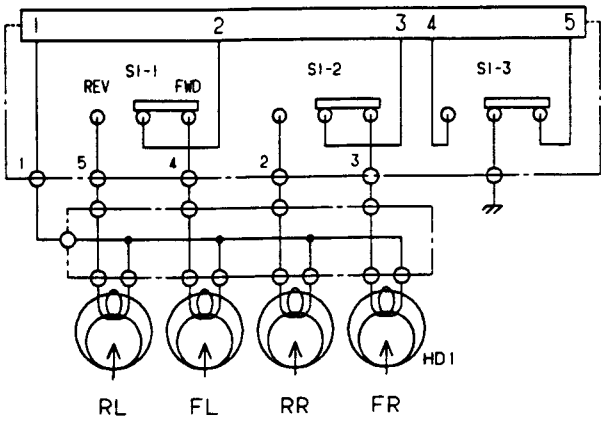

SWITCH P.C. BOARD

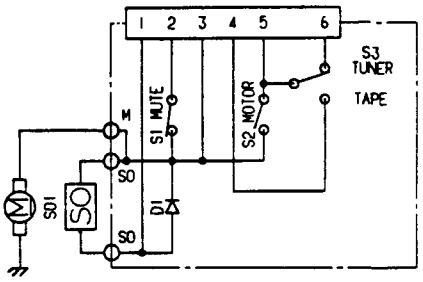

P.C. BOARD UNIT

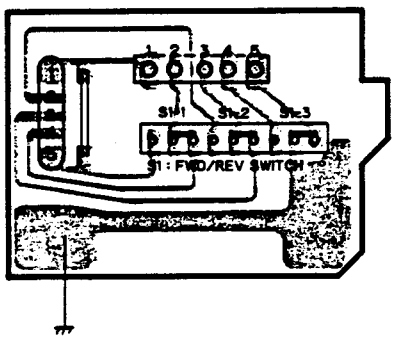

SWITCH P.C. BOARD

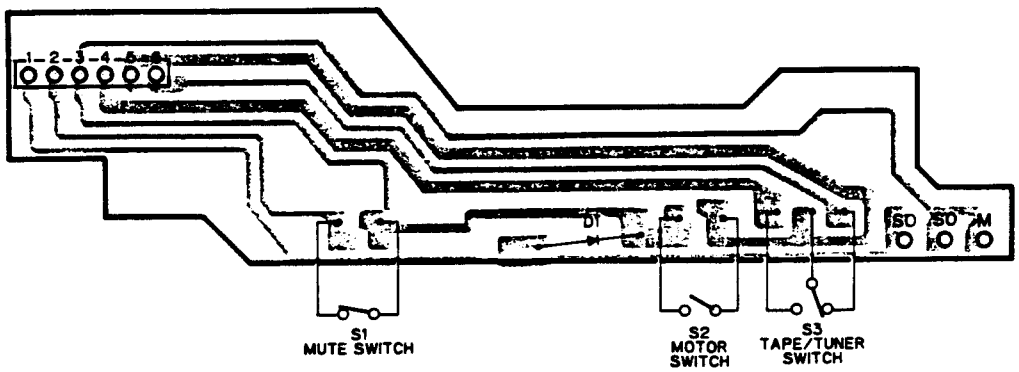

www.manualscenter.com