ALPINE®
SERVICE MANUAL

FM/MW/LW/RDS Cassette Receiver

CD Shuttle Controller

● For the cassette deck mechanism parts (GR75H130) of this model, refer to the Service Manual • GR/GR-Y Series (68P20504W06).

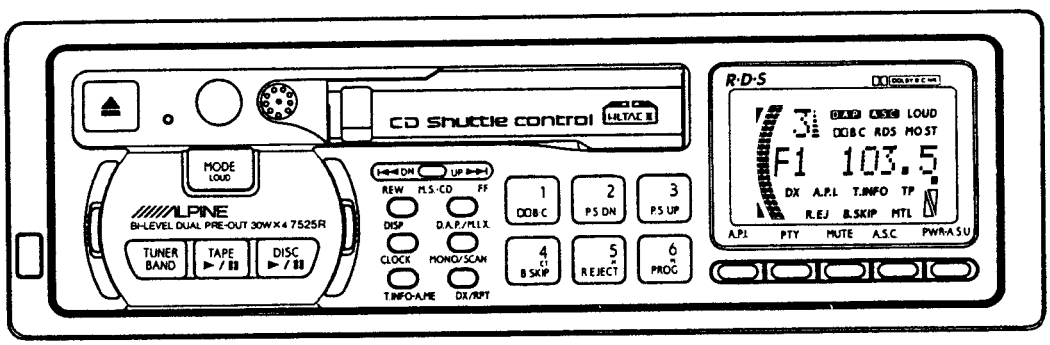

7524R/7525R

Contents

Specifications

FM RADIO

Intermediate Frequency	10.7 ± 0.1MHz
Frequency Range	87.5~108MHz
Usable Sensitivity (Mono at 98.1MHz)	17.2dBf
Limiting Sensitivity (-10dB, at 98.1MHz)	19.2dBf
S/N Ratio (Stereo at 98.1MHz)	56dB
Image Rejection (at 106.1MHz)	40dB
IF Rejection (at 90.1MHz)	60dB
Distortion (Input 1mV at 98.1MHz)	1%
Frequency Response (Ref. 400Hz, at 98.1MHz)	100Hz : 0 ± 3dB 10kHz : -12 ± 3dB
Stereo Separation (98.1MHz)	20dB
SK Sensitivity (98.1MHz)	25.2dBf
PS Sensitivity (98.1MHz)	36.2dBf
TP Sensitivity (98.1MHz)	36.2dBf

MW RADIO

Intermediate Frequency	450kHz
Frequency Range	531~1,602kHz
Usable Sensitivity (20dB S/N, at 999kHz)	34dB
S/N Ratio (at 999kHz)	44dB
Image Rejection (at 1,404kHz)	50dB
IF Rejection (at 603kHz)	60dB
Distortion (at 999kHz)	1.5%
Frequency Response (Ref. 400Hz, at 999kHz)	100Hz : -3 ± 4dB 4kHz : -12 + 6, -12dB

LW RADIO

Intermediate Frequency	450kHz
Frequency Range	153~281kHz
Usable Sensitivity (20dB S/N, at 216kHz)	41dB
S/N Ratio (at 216kHz)	42dB
Image Rejection (at 270kHz)	40dB
IF Rejection (at 162kHz)	50dB
Distortion (at 216kHz)	1.5%
Frequency Response (Ref. 400Hz, at 216kHz)	100Hz : -3 ± 4dB 4kHz : -12 + 6, -12dB

TAPE PLAYER

Wow & Flutter (JIS WRMS, MTT-111N)	0.2%
Tape Speed (MTT-111N)	4.76cm/sec. +3 to -1%
S/N Ratio (MTT-212N)	Dolby OFF : 52dB Dolby B : 58dB Dolby C : 65dB (●)
Distortion (MTT-118N)	2%
Frequency Response (Ref. 1kHz, MTT-256)	63Hz : -3dB 12.5kHz : -3dB
Separation (MTT-141N)	35dB
Crosstalk (MTT-121N)	45dB
FF & REW Time (C-60)	115sec.

GENERAL

Power Supply	DC14.4V
Power Output / Impedance	11W / ch / 4ohm (○) 14W / ch / 4ohm (●)
Output Voltage / Impedance	1V / 10kohm
Semiconductors	34 IC's, 66 Transistors, 28 Diodes, 7 Zener Diodes (○) 38 IC's, 70 Transistors, 31 Diodes, 7 Zener Diodes (●)
Dimensions (W × H × D)	Chassis : 178 × 50 × 153 mm Nose : 171 × 48 × 22 mm
Weight	1.6kg

NOTE : Due to Continuing product improvement, specifications and designs are subject to change without notice.
○ : For 7524R Model Only, ● : For 7525R Model Only, Others : Common

ERROR INDICATION FOR CD SHUTTLE

INDICATION	CAUSE	SOLUTION
ERROR–01	Disc-change malfunction.	Consult your Alpine dealer.
	Disc-change malfunction.	Press the magazine eject button and pull out the Magazine. Check for error indication. Insert the magazine again. If the magazine can not be pulled out, consult your Alpine dealer.
	Magazine ejection impossible.	Press the magazine eject button. If the magazine does not eject, consult your Alpine dealer.
ERROR–02	Disc is in player mechanism.	Press the magazine eject button, and insert an empty magazine.
---H	High Temperature.	Will disappear when the temperature returns to operation range.
EEEE	Misconnection or disconnection of CD Shuttle.	Check connection between CD Shuttle and control unit.

INDICATION FOR 7525R/7524R

INDICATION	MEANING
NO MAGZN	The magazine is not installed into the CD Shuttle.
NO DISC	No discs are in the magazine.

FEATURES

- **FULL FRONT DIN™ CHASSIS**
- **CD SHUTTLE™ CONTROL**
- **D.F.P. (DETACHABLE FRONT PANEL)**
- **GR-HIGH PRECISION/LOW NOISE FULL LOGIC**
- **WIRELESS REMOTE CONTROL CAPABILITY**
- **A.S.C. (AMBIENCE SOUND COMPENSATOR) (7525R only)**
  A.S.C. detects the noise, which changes according to the vehicle's speed and the road conditions. Thanks to fuzzy logic, which makes judgments that closely parallel those of a human, A.S.C. maintains the volume and tone settings at a comfortable level.
- **A.S.U. (AUTOMATIC SET-UP)**
  Returns the unit to a factory preset condition. This includes setting the Tone controls flat, FADER and BALANCE centered, and placing the unit in the Tuner mode tuned to the strongest station in the area.
- **HLTAC II™ TAPE HEAD**
  Alpine's proprietary HLTAC II tape head features Oxygen Free Copper (OFC) coil windings to prevent low level signal loss and corrosion. It also features a super-close-tolerance, extremely narrow 0.8 micron head gap for exceptionally flat and accurate frequency response.
- **P.S. (PROGRAM SENSOR)**
  Program Sensor allows skipping up to 9 tracks on the tape in either forward or reverse directions.
- **A.P.I. (AUTO PROGRAM IDENTIFICATION)**
  While A.P.I. function turns on in the FM mode, a best receptive RDS station which has same program as the station you are receiving automatically can be received.
- **T. INFO (TRAFFIC INFORMATION)**
  While T. INFO function turns on, a traffic information service automatically can be received when a station transmit.
- **D.A.P. (DIRECT ACCESS PRESETS)**
- **A. MEMO (INTELLIGENT AUTO MEMORY)**
- **REPEAT (TAPE, CD)**
- **SCAN (TAPE, CD)**
- **BLANK SKIP**
- **DOLBY* B/C NOISE REDUCTION**
- **S.T.M. (SOURCE TONE MEMORY)**
  Automatically memorizes the settings of your Bass/Treble Controls for each source.
- **DUAL PRE-AMP OUTPUTS**
  Dual pre-amp outputs, along with a pre-amp fader, make easy and complete system expansion possible.
- **SELECTABLE FADER**
- **DUAL ILLUMINATION**
- **LITETOUCH™ 30-STATION PRESETS**
  FM1 : 6, FM2 : 6, MW : 6, LW : 6, D.A.P.: 6

* Dolby noise reduction manufactured under license from Dolby Laboratories Licensing Corporation. "DOLBY" and the double-D symbol (DD) are trademarks of Dolby Laboratories Licensing Corporation.

CONTROLS AND INDICATORS

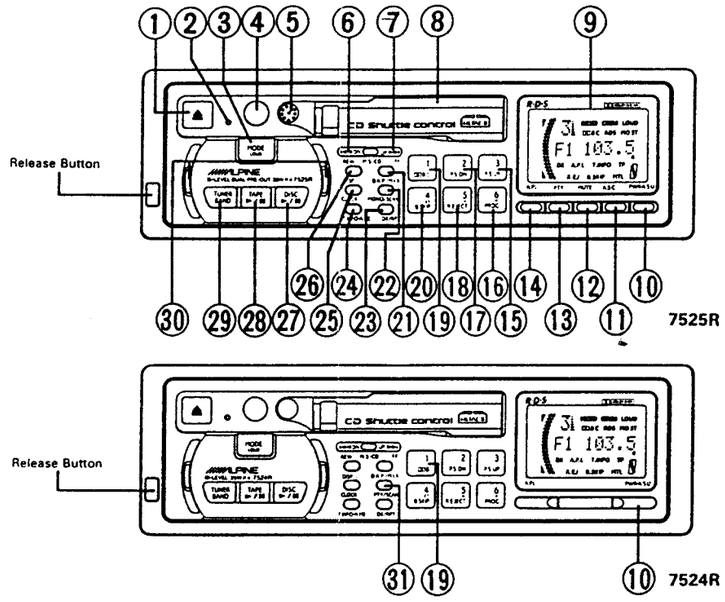

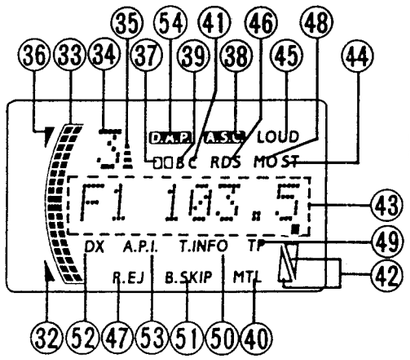

7525R Display

Please see the page indicated in the table below for explanations on the controls and indicators.

CONTROLS AND INDICATORS

FRONT PANEL

① **Eject Button**
② **Reset Switch**
③ **Audio MODE Select Switch/ LOUDness Button**
④ **Sensor Window for Remote Control**
⑤ **Mic Sensor (7525R only)**
⑥ **REW/DN Switch (⏮)**
⑦ **FF/UP Switch (⏭)**
⑧ **Cassette Loading Slot**
⑨ **Display**
⑩ **PoWeR Off/Auto Set Up Button**
⑪ **Ambience Sound Compensator Button (7525R only)**
⑫ **MUTE Button (7525R only)**
⑬ **Program TYpe Button (7525R only)**
⑭ **Auto Program Identification Button**
⑮ **Preset and Direct Disc Access No. 3/P.S. UP Button**
⑯ **Preset and Direct Disc Access No. 6/PROGram/Minute Button**
⑰ **Preset and Direct Disc Access No. 2/P.S. DN Button**
⑱ **Preset and Direct Disc Access No. 5/Return EJECT/Hour Button**
⑲ **Preset and Direct Disc Access No. 1/Dolby B/C NR Button (7525R only) Preset and Direct Disc Access No. 1/Dolby B NR Button (7524R only)**
⑳ **Preset and Direct Disc Access No. 4/Blank SKIP/Clock Time Button**
㉑ **Direct Access Preset/M.I.X. Play Button**
㉒ **MONO/SCAN Button (7525R only)**
㉓ **DX (Local/Distance)/RePeaT Button**
㉔ **Traffic INFOrmation/Auto MEmory Button**
㉕ **CLOCK Button**
㉖ **DISPlay Button**
㉗ **DISC (Play/Pause ▶/II) Button**
㉘ **TAPE (Play/Pause ▶/II) Button**
㉙ **TUNER/BAND Button**
㉚ **Audio Control Knob**
㉛ **Program TYpe/SCAN Button (7524R only)**

DISPLAY

㉜ **Audio Control Up Indicator**
㉝ **Bar Graphic Indicator**
㉞ **Preset Channel/Disc Number Indicator**
㉟ **Preset Indicator**
㊱ **Audio Control Down Indicator**
㊲ **Dolby NR Indicator**
㊳ **A.S.C. Indicator (7525R only)**
㊴ **Dolby B NR Indicator**
㊵ **MTL Indicator**
㊶ **Dolby C NR Indicator (7525R only)**
㊷ **Tape Direction Indicators**
㊸ **Dot Matrix Display**
㊹ **ST Indicator**
㊺ **LOUD Indicator**
㊻ **RDS Indicator**
㊼ **R. EJ Indicator**
㊽ **MO Indicator (7525R only)**
㊾ **TP Indicator**
㊿ **T. INFO Indicator**
(51) **B. SKIP Indicator**
(52) **DX (Distance) Indicator**
(53) **A.P.I. Indicator**
(54) **D.A.P. Indicator**

Connection

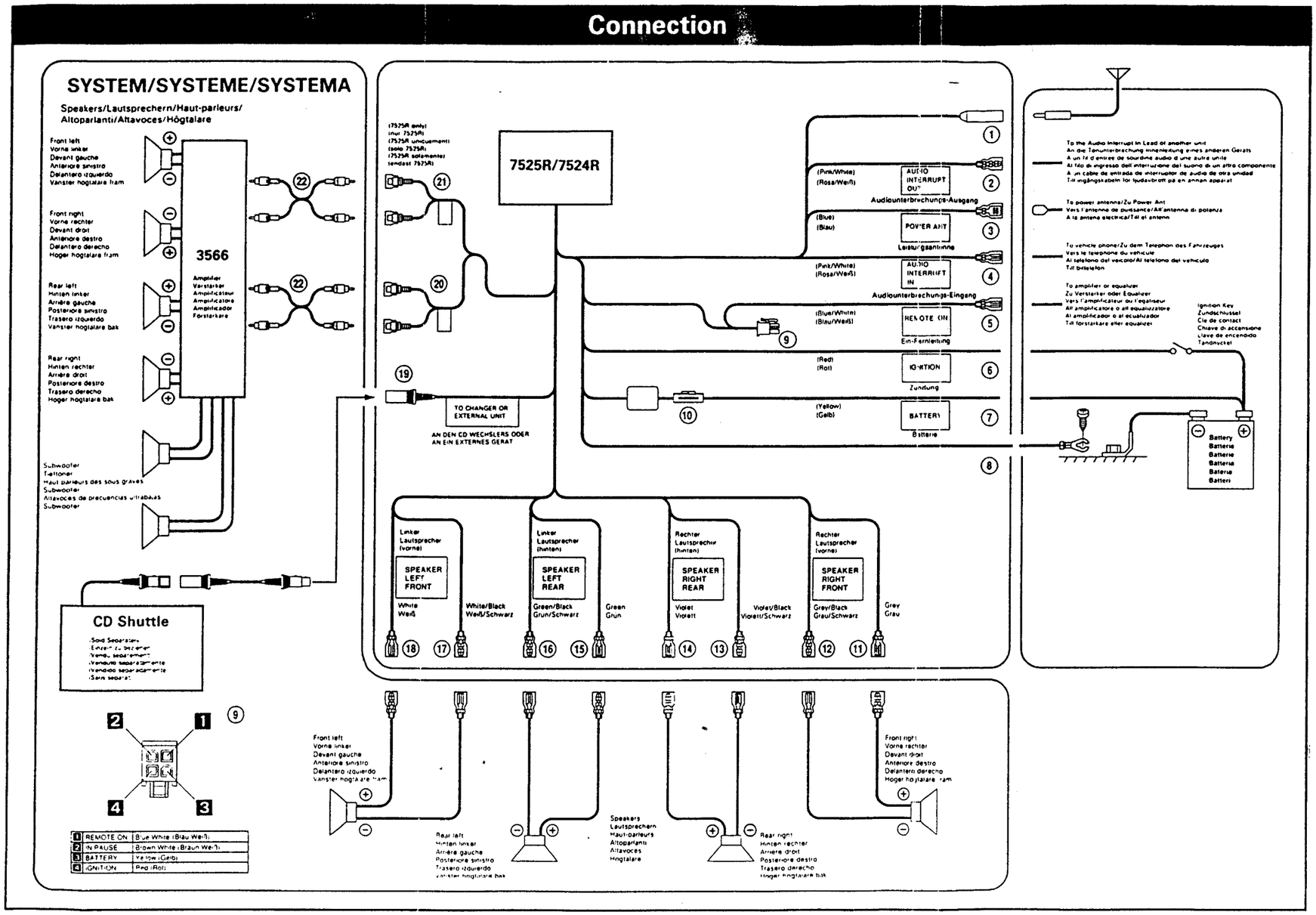

English

① **Antenna Receptacle**
② **Audio Interrupt Out Lead (Pink/White)**
③ **Power Antenna Lead (Blue)**
When loaded with a power antenna, connect to the +B terminal of the power antenna.
④ **Audio Interrupt In Lead (Pink/White)**
⑤ **Remote Turn-On Lead (Blue/White)**
Connect this lead to the remote turn-on lead of your amplifier or signal processor.
⑥ **Switched Power Lead (Ignition) (Red)**
Connect this lead to an open terminal on the vehicle's fuse box or another unused power source which provides (+)12V only when the ignition is turned on or in the accessory position.
⑦ **Battery Lead (Yellow)**
Connect this lead to the positive (+) post of the vehicle's battery.
⑧ **Ground Lead**
Connect this lead to a good chassis ground on the vehicle. Make sure the connection is made to bare metal and is securely fastened using the sheet metal screw provided.
⑨ **Power Supply Connector**
Connect to the receptacle of Power Wiring Harness.
⑩ **Fuse Holder (10A)**
⑪ **Right Front Speaker Output Lead (Grey)**
⑫ **Right Front Speaker Output Lead (Grey/Black)**
⑬ **Right Rear Speaker Output Lead (Violet/Black)**
⑭ **Right Rear Speaker Output Lead (Violet)**
⑮ **Left Rear Speaker Output Lead (Green)**
⑯ **Left Rear Speaker Output Lead (Green/Black)**
⑰ **Left Front Speaker Output Lead (White/Black)**
⑱ **Left Front Speaker Output Lead (White)**
⑲ **DIN Connector**
Connect this to the DIN connector on the CD Shuttle.
⑳ **Rear Output RCA Connectors**
RED is right and WHITE is left.
㉑ **Front Output RCA Connectors**
RED is right and WHITE is left.
㉒ **Extension Cable (Sold Separately)**

OPERATION

● **BASIC OPERATION**

Initial System Start

When operating the system for the first time after installation or after the vehicle's battery has been disconnected and reconnected, set the volume level to its minimum, then carefully press the Reset switch ② with a sharp pencil or any other pointed object.

How to adjust the volume and tone (Refer to the diagram in next page.)

1. Turn On the system by pressing the PWR switch ⑩ or any other button (other than Eject ① or Reset ②).
2. Press the Audio MODE Select switch ③ to select each adjusting mode.

   → TREB → BASS → BAL → FAD → VOL ↩

   Each time this switch is pressed, the mode changes. The mode is indicated in the display. The mode indicator changes as each mode is selected.
3. Once the desired mode appears in the display, use the Audio Controller ㉚ to make your adjustment. The Audio Control Up indicator ㉜ flashes when turned clockwise and the Down indicator ㊱ flashes when turned counterclockwise.

Power Off

Press the PWR button ⑩ to turn the unit Off.

Loudness

1. Press the LOUD button ③ for more than 2 seconds to activate the loudness function.
2. Press the LOUD button ③ for more than 2 seconds again to defeat this feature.

Mode Switching of the 7525R/7524R

1. Radio Mode
   Press the BAND button ㉓ to put the unit into the radio mode. The Band indicator (F1, F2 or MW/LW) will appear in the display.
2. Cassette Player Mode
   Press the TAPE button ㉘ to put the unit into the cassette player mode.
3. CD Shuttle Mode
   Press the DISC button ㉗ to put the unit into the CD mode.

Five Modes Setting Function

This unit allows setting of five modes shown below. For further details, refer to the description on each mode.

Preset No. 1: FM level switching.
Preset No. 2: Sound volume setting during reception of traffic information.
Preset No. 3: Switching of automatic tracing function. (A.P.I. 1/A.P.I. 2/PS ONLY)
Preset No. 4: Regional program on/off switching.
Preset No. 5: Built-in lighting switch function (green/amber).

OPERATION

Audio Controller Operation

OPERATION	IND	SPEED OF CHANGE	VOLUME	TREBLE	BASS	BALANCE	FADER
		FAST	UP	BOOST	BOOST	Left-ch Decreases	Rear-ch Decreases
		SLOW	UP	BOOST	BOOST	Left-ch Decreases	Rear-ch Decreases
		NO CHANGE					
		SLOW	DOWN	CUT	CUT	Right-ch Decreases	Front-ch Decreases
		FAST	DOWN	CUT	CUT	Right-ch Decreases	Front-ch Decreases

S.T.M. (Source Tone Memory)

The Bass and Treble controls can be individually set for each source (FM, MW/LW, Tape, and CD). Once set, their positions are automatically memorized. Whenever the source is reselected, the Bass and Treble controls will return to your preset configuration.

Mute (7525R only)

1. Press the MUTE button ⑫ to reduce instantly the sound level by 20 dB. When the mute mode is set, part of the bar graph ㉝ and the audio control direction of rotation indicator ㉜ or ㊱ flash.
2. To release the mute function, press the MUTE button ⑫ a second time.

Switching the Lighting Color

Lighting colors (green/amber) for the front panel can be changed.

1. Press the DISP button ㉖ for 3 seconds.
2. Press the Preset No. 5 button ⑮ to switch the lighting between green and amber.

OPERATION

A.S.C. (Ambience Sound Compensator) (7525R only)

The A.S.C. detects the ultra-low and medium low frequency noise which changes according to the vehicle's speed and road conditions, and controls the volume and tone using judgments near those of the human senses thanks to fuzzy logic to keep the settings at a comfortable level.

1. Play the radio, a cassette or a CD and adjust the volume and tone as desired.
2. Press the A.S.C. button ⑪. The A.S.C. function is activated and the volume and tone are controlled automatically.
3. To release the A.S.C. function, press the A.S.C. button ⑪ a second time.

Switching the A.S.C. Mode (7525R only)

A.S.C. includes three different sensitivity settings to keep the 7525R's output audible above the ambient noise level (caused by the road noise and speed of the vehicle). The different levels as indicated in the display are, in decreasing order, A.S.C. 1, A.S.C. 2, A.S.C. 3.

1. Press the A.S.C. button ⑪ for two seconds.
2. "A.S.C. 1" is indicated on the display, and the mode changes each time the button is pressed.

   → A.S.C. 1 → A.S.C. 2 → A.S.C. 3 ↩

NOTE:

The A.S.C. mode can be switched even if the A.S.C. function is not activated.

Automatic Set Up

All the bothersome initialization procedures required after installation are conducted automatically.

1. With the power turned On, press the Power Off/Auto Set Up button ⑩ for 3 seconds. The following procedures are conducted automatically.
2. "A.S.U." flashes three times on the dot matrix display ㊸.
3. The unit is set to the D.A.P. mode and stations are automatically stored in the memory.
4. The treble, bass, balance and fader settings are all set to the center. The various modes and levels are indicated on the dot matrix display ㊸ and bar graph ㉝.
5. The volume gradually increases.
6. The A.S.U. operation is completed.

OPERATION

● RADIO OPERATION

Tuning Band Selection

Press the BAND button ㉙ to select the desired tuning band. The Band indicator shows your selection.

Local/Distance (DX) Seek Sensitivity for FM, MW and LW

You can select the radio seek sensitivity (local or distance (DX)), by pressing the DX (distance) button ㉓.

In the local mode, with no DX indicator ㉜, the radio tunes in only strong stations (stations C, F, H and L in the illustration below).

In the distance mode, with DX indicator ㉜, the radio tunes in both strong and weak stations (all stations from A to M in the illustration).

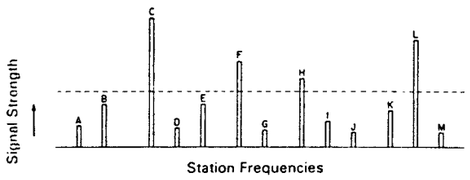

FM Stereo/Monaural Switching (7525R only)

You can select between the auto switching or monaural only modes for FM reception by pressing the MONO button ㉒. In the auto switching mode, you can receive stereo broadcasts in stereo and monaural broadcasts in MONO. In the monaural mode, you will receive the broadcast in monaural only, even if the broadcast is in stereo. The monaural only mode quiets the noisy stereo signal of weaker broadcasts. The ST indicator ㊹ will not appear while the monaural mode is selected.

Manual and Auto Seek Tuning

Stations can be tuned in using the procedures described below.

1. Select the tuning band (FM1, FM2, MW or LW) with the BAND button ㉙. The Band indicator shows your selection.

   → F1 → F2 → MW → LW →

2. Decreasing the frequency:
   The frequency is decreased by one step each time the DN switch ⑥ is pressed.
   By pressing and holding the switch for at least 0.5 seconds, the unit will automatically tune the first station it finds in the direction of decreasing frequency.
3. Increasing the frequency:
   The frequency is increased by one step each time the UP switch ⑦ is pressed.
   By pressing and holding the switch for at least 0.5 seconds, the unit will automatically tune to the first station it finds in the direction of increasing frequency.

OPERATION

Preset Memory Programming

Follow the instructions below to program stations into preset memory:

1. Select the tuning band (FM1, FM2, MW or LW) with the BAND button ㉙.
2. Tune in your desired station using manual or auto seek tuning.
3. Press the Preset button number 1 ⑮ for more than 2 seconds.
4. The preset indicator ㉟ and the dot matrix display ㊸ will begin to blink. Press that Preset button again while the display is blinking (within 5 seconds).
5. The frequency you selected will be placed into preset memory number 1 and will appear in the display.
   NOTE:
   If a preset memory has already been set in the same address, it will be cleared and the new station will be memorized.
6. Follow steps 2 — 4 for the remaining presets (2 — 6). Use this procedure for FM1, FM2, MW and LW.

Auto Memory Preset

1. Select the desired tuning band (FM1, FM2, MW or LW) with the BAND button ㉙. The Band indicator shows your selection.
   NOTE:
   The auto memory preset procedure is allowed in the D.A.P. mode.
2. Press the A. ME button ㉔ for over 2 seconds.
3. The tuner will automatically seek the 6 strongest stations in the selected band and memorize them in order of their signal strength. These stations are automatically placed in the preset memory with the strongest station in preset No. 1 and the 6th strongest station in preset No. 6. When seeking stations, the tuner first seeks in the local tuning mode. If less than 6 stations are memorized, the tuner seeks again in the distance (DX) mode.
4. After finishing the auto memory preset, the tuner goes to the station placed in preset memory No. 1. If no stations are memorized, it returns to the original station you were listening to before the auto memory preset procedure began.

Preset Tuning

After the preset stations have been memorized, you can tune in your desired station (within the band displayed) with one touch of a button.

1. Select the tuning band (FM1, FM2, MW or LW) with the BAND button ㉙.
2. Press any one of the Preset buttons (⑮ — ⑳) and the number of that preset will appear in the preset channel indicator ㊹.
3. The frequency of the station placed in the selected preset location will appear in the display.

D.A.P. (Direct Access Preset)

This feature allows the storage of FM, MW and LW presets on the same band.

1. Press the D.A.P. button ㉑ to light up the D.A.P. indicator ㊻.
2. To program stations into the D.A.P. band, follow steps 1 — 4 as described in the Preset Memory Programming section above.

Accessing the D.A.P. Presets

1. Press the D.A.P. button ㉑. The D.A.P. indicator ㊻ will illuminate in the display.
2. Press one of the Preset buttons (⑮ — ⑳).
3. The frequency of the station placed in the selected D.A.P. location will appear in the display.

Switching the FM Volume

Use this function if the difference in volume is great when switching between a tape and the FM radio.

1. Press the DISP button ㉖ for 3 seconds.
2. Press the Preset No. 1 button ⑮ to switch the display between "FM-LV Hi" and "FM-LV Lo".
   The FM volume can be set to one of two positions, high or low. Set the position according to the broadcast station.

OPERATION

● TAPE PLAYER OPERATION

Turn the unit On and press the TAPE (▶/II) button ㉘ to access the tape mode.

Dolby* B/C Noise Reduction

Before playing a cassette tape, check to see if it is encoded with Dolby B or C noise reduction. Press the Dolby NR button ⑲ when playing a Dolby NR encoded tape.

Press the Dolby NR button ⑬ to select Dolby NR mode. The Dolby NR indicator ㊲ and the B ㊴ or C ㊶ indicator shows your selection. The Dolby NR mode changes each time the button is pressed.

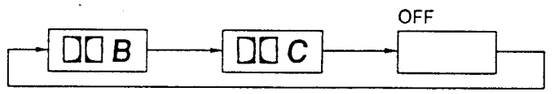

NOTE:
Only Dolby B is offered on the 7524R.

Cassette Loading

1. Insert a prerecorded cassette tape into the cassette loading slot ⑧ with the open side facing to your right.
2. If the cassette tape is not completely loaded into the deck, lightly press the cassette into the slot.

Metal (MTL) Indicator

Metal or CrO_2 cassette tapes having an open detection hole will automatically be detected, in which case the MTL indicator ㊵ in the display comes on and the playback equalization is automatically set to 70μsec.

Eject

Press the Eject button ① to eject the cassette from the tape mechanism.

Pause

To temporarily stop playback, press the TAPE (▶/II) button ㉘. To resume playback, press the same button again.

Playback

1. Insert a prerecorded cassette tape with the open side facing right. The playback begins immediately.
2. If a cassette tape is already loaded in the unit, press the TAPE (▶/II) button ㉘ to start playback.
3. To stop tape play, press the Eject button ① or turn the power Off with the PWR switch ⑩.

NOTE:
Push the DISP button ㉖ with the tape or CD played in the A.P.I. or T. INFO mode, and the unit will be set to the TUNER mode and the tuning is possible.

OPERATION

True Fast Forward and Rewind

1. Press the FF switch ⑦ to advance the tape quickly. Press the REW switch ⑥ to rapidly run the tape backward. The deck will perform these functions correctly regardless of the tape play direction.
2. To disengage the FF or REW function, press the TAPE (▶/II) button ㉘.

Program Sensor

1. To advance the tape to the beginning of the next musical track, press and release the P.S. UP button ⑮. The display will show "P.S. UP + 1" as shown below. Successive pressing of this button will increase the number of tracks to be skipped as the tape advances. The number in the display will increase accordingly. For example, to go from track 1 to track 4, press the P.S. UP button ⑮ three times (the number in the display will be "+3"). The tape deck searches for blank sections between tracks to the beginning of track 4 and begins playback.
2. To access the beginning of the current musical track, press and release the P.S. DN button ⑰. The display will show "P.S. DN −1". Successive pressing of this button will increase the number of tracks to be skipped as the tape rewinds. The number in the display will increase (in the negative direction) accordingly. For example, to go from track 5 to track 4, press the P.S. DN button ⑰ twice (the number in the display will be "−2" as shown below). The tape deck searches for blank sections between tracks to the beginning of the track 4 and begins playback.

[Example]

P.S. UP +1	P.S. DN −2

NOTE:
The P.S. cannot detect blank sections of less than 3 seconds.

Auto Reverse
When the tape is played or fast-forwarded to the end, the tape transport automatically reverses the tape direction and playback begins.

Manual Reverse
To manually change playback direction (switch between side A and side B), press the PROG button ⑯.

Repeat

1. Insert the cassette tape and begin playback.
2. When you find a selection you would like to repeat, press the RPT button ㉓ until the REPEAT indicator appear in the display. This selection will be continuously repeated until the repeat function is disengaged.
3. To cancel the repeat function, press the RPT button ㉓ again. The REPEAT indicator will disappear.

OPERATION

Scan

1. Press the SCAN button ㉒ (㉛ for 7524R) and the deck will play the first 10 seconds of each selection. This feature is convenient when searching for a particular selection on a tape.
2. Once you have located your desired selection, press the SCAN button ㉒ again to defeat this function.

Blank Skip

1. Press the B. SKIP button ⑳ during playback to skip over any blank sections of tape lasting 15 seconds or more.
2. To cancel the blank skip function, press the B. SKIP button ⑳ again.

Return Eject

1. Insert the cassette tape and begin playback.
2. Press the R. EJECT button ⑱ during one of the following modes and the cassette tape will automatically eject when:
   - Playback mode; After both sides A and B have been played.
   - Fast Forward mode; After the other side has been played.

   The R. EJ indicator ㊼ on that button will light.
3. To cancel the return eject mode, press the R. EJECT button ⑱ again.

Head Cleaning
When playback sound quality begins to deteriorate, it is time to clean the tape head. Insert a special head cleaning cassette into the tape deck and allow it to run for approximately 1 minute to remove any foreign matter. There are special cleaning cassettes that also clean the capstans and pinch rollers. Please contact your authorized Alpine dealer for information about these cleaning devices.

OPERATION

● CD OPERATION

The following instructions apply only to systems that incorporate the Alpine CD Shuttle with 7525R/7524R.

Turn the unit On and access the CD mode by pressing the DISC (▶/II) button ㉗.

Initial System Turn-On
When operating the system for the first time after installation or after the vehicle's battery has been disconnected and reconnected, press the Reset switch ② with a sharp pencil or other pointed object.

Normal Play

1. Press the DISC (▶/II) button ㉗.
2. The first disc will begin playback.
3. After the last track on the last disc is played back, the pickup will return to the beginning of the first track of the first disc and begin playback from that point.

Pause
While the disc is playing, press the DISC (▶/II) button ㉗ to temporarily stop playback. The dot matrix display ㊸ will show "PAU". To resume playback, press the DISC button (▶/II) ㉗ again.

Music Sensor (Skip)
This feature allows you to access the beginning of your musical track selection simply and quickly. It is functional in the play or pause mode. The dot matrix display ㊸ shows the track number you have selected.

- To advance to the next track on the disc, press the UP/FF switch ⑦.

1. Playback stops, and the pickup moves up to the beginning of the next track. That track number appears in the dot matrix display ㊸.
2. Playback begins immediately.
3. If you wish to access a track further ahead on the disc, continue pressing and releasing the UP/FF switch ⑦ until you reach the track of your choice.

- To replay the track that is currently playing, press and release the DN/REW switch ⑥.

1. Playback stops, and the pickup moves back to the beginning of the current track. The track number in the dot matrix display ㊸ remains the same.
2. Playback begins immediately from the beginning of the track.
3. If you access a track further towards the beginning of the disc, continue pressing and releasing the DN/REW switch ⑥ until you reach the track of your choice.

OPERATION

Direct Disc Access

1. Press one of the Direct Disc Access buttons (⑲ – ⑳) to select from discs 1 – 6. The disc and track numbers will appear in the display.
2. Press the UP/FF ⑦ or DN/REW ⑥ switch for musical track selection.

Fast Forward/Fast Backward

The fast forward/fast backward feature works in the play mode only.

1. Press either the FF ⑦ or the REW ⑥ switch and hold it down for more than 1 second.
2. To move the pickup forward rapidly, hold down the FF switch ⑦.
3. To move the pickup backward rapidly, hold down the REW switch ⑥.
4. Release the button when you get to the desired position on the disc.
5. When the pickup reaches the end of the disc, it will begin playback from the beginning of the first track on the next disc.

Repeat (One/All)

This feature allows you to continuously repeat a single track or one entire disc.

To Repeat a Single Track

1. Locate the music track of your choice using the UP ⑦ or DN ⑥ switch.
2. Press the RPT button ㉓.
   The REPEAT indicator will illuminate on the dot matrix display ㊸.
   The music track will be played back repeatedly.
3. To stop repeat play, press the RPT button ㉓ twice.

To Repeat an Entire Disc

1. While playing a disc, press the RPT button ㉓ until the ALL indicator will illuminate.
2. The disc will be played back repeatedly.
3. To stop repeat play, press the RPT button ㉓ once. The indicator illumination will be off.

Disc Scan

Press the SCAN button ㉒ (㉛ for 7524R) and the unit will playback the first 10 seconds of each track in succession. This function is useful in searching ahead on a disc for a specific selection. Pressing the SCAN button ㉒ a second time deactivates the function.

M.I.X. (Random Play)

Press the M.I.X. button ㉑ while the unit is in the play or pause mode. Musical tracks on the selected disc will be played back in a random sequence generated by the microprocessor. After all the tracks on the disc have been played back once, the player will begin a new random sequence.

OPERATION

CD Display Switching

In the CD mode, the display will show the Disc and Track Number (Fig. A) or the Elapsed Time (Fig. B). Press the DISP button ㉖ to select between the Disc/Track number and the Elapsed Time indicators.

Fig. A Fig. B

NOTE:

In the A.P.I. or T. INFO mode, even if the DISP button ㉖ is pushed, the display can not be switched. The mode will be set to the tuner mode and the tuning is possible.

● **CLOCK OPERATION**

RDS Clock

1. Press the CLOCK button ㉕. The clock time will appear on the display.
2. The clock is automatically corrected, the dot matrix display ㊸ showing "R", when RDS CT data is received.

R 12 : 00

NOTE:

If the RDS signal in reception is weak, the time adjustment by RDS function may require a little longer time.

3. If the unit shows incorrect time caused by a wrong signal, adjust the time manually by referring to "Setting the Time" below.

Normal Clock

1. Press and hold the CLOCK button ㉕ for more than 3 seconds.
2. Press the CT button ㉔ to deactivate the RDS function.
3. Adjust the time by referring to the "Setting the Time" below.

12 : 00

Setting the Time

1. Press and hold the CLOCK button ㉕ for more than 3 seconds to enable the time adjust mode. The time display will blink when ready for setting.

NOTE:

Make adjustments for 5 seconds blinking.

2. Adjusting the hours:
   Use H button ⑱ to adjust the hours.
3. Adjusting the minutes:
   Use M button ⑮ to adjust the minutes.

OPERATION

● **Handling the Detachable Front Panel**

Removal

1. Press the PWR button ⑩ to turn the power Off. (Fig. 2)
2. Press the Release button. (Fig. 2)
3. The detachable front panel pops out. Grasp part of it and pull it off. (Fig. 3)

NOTE:

After removing the detachable front panel, place it in the included case and protect it from strong shocks.

Installation

1. Check that there is no dirt, etc., in the grooves on the unit, then insert the detachable front panel from the right side. (Fig. 4)
2. Press on the detachable front panel at a point other than the button surface on the left side until a click is heard. (Fig. 5)
3. Touch the detachable front panel and check that it is securely fastened.

NOTE:

Be sure to check that there is no dirt, dust, etc., on the connector terminals for the detachable face and unit before installing it.

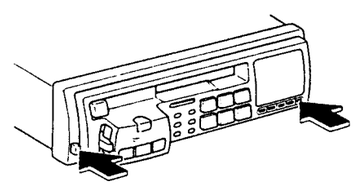

Fig. 2

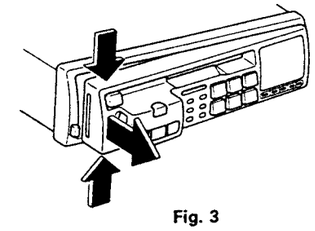

Fig. 3

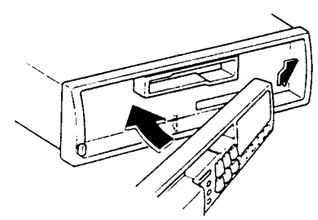

Fig. 4

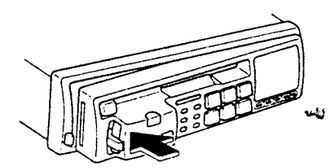

Fig. 5

Disassembly Instructions

1. Removal of Nose Unit

(1) Refer to the Owner's Manual (Part No. 68P40870W42).

2. Removal of Front Escutcheon

(1) After removal of Top Cover, remove the Hooks (a) as shown in Figure 1.

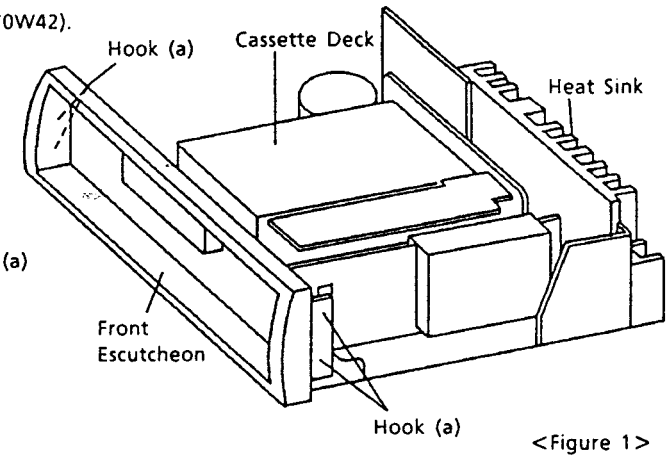

<Figure 1>

3. Removal of Cassette Deck

(1) Remove four screws marked "●" as shown in Figure 2.
(2) Disconnect one Connector from the Cassette Deck.

4. Removal of Main P.C.Board

(1) Remove seven screws marked "■" as shown in Figure 2, 3.
(2) Disconnect two connectors from the Main P.C.Board.

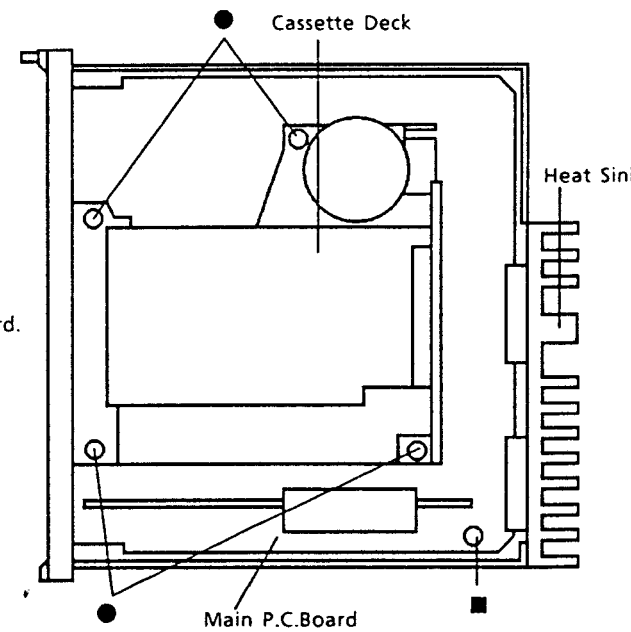

<Figure 2>

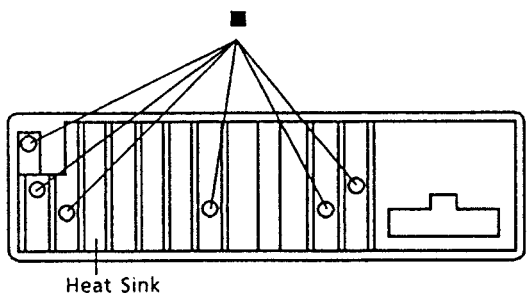

<Figure 3>

5. Removal of Front P.C.Board

(1) After removal of Nose Unit, remove two screws marked "▲" and the Hooks (b) as shown in Figure 4.

(2) Remove one screw marked "※" and the Hooks (c) as shown in Figure 4.

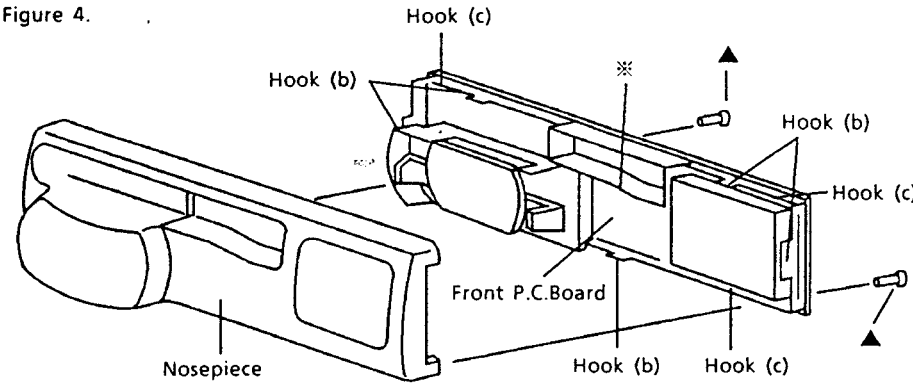

<Figure 4>

Adjustment Procedures

1 FM SECTION

(1) Dummy Antenna Circuit

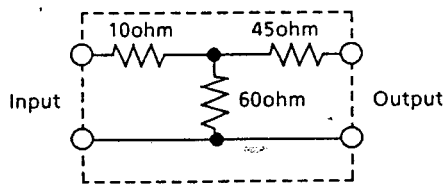

For 50 ohm FM Signal Generator

Figure 5

(2) Connections

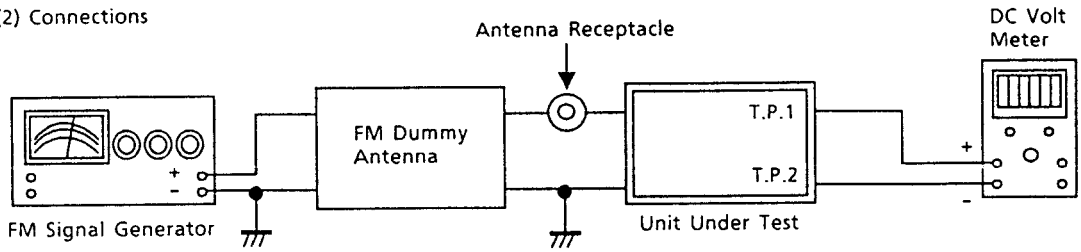

Figure 6

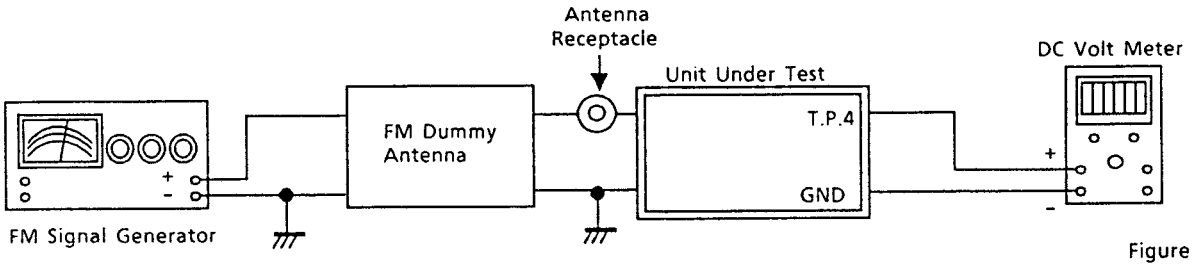

Figure 7

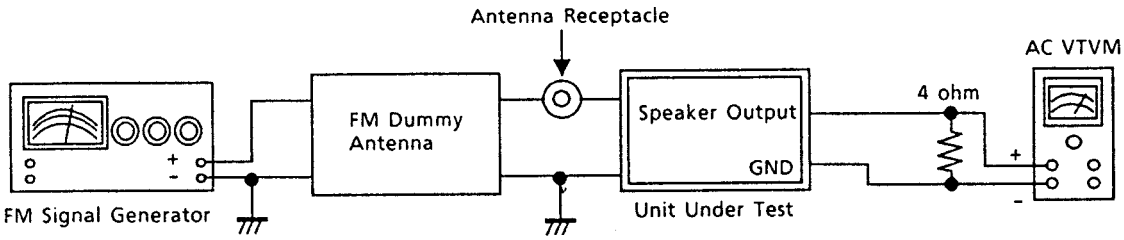

Figure 8

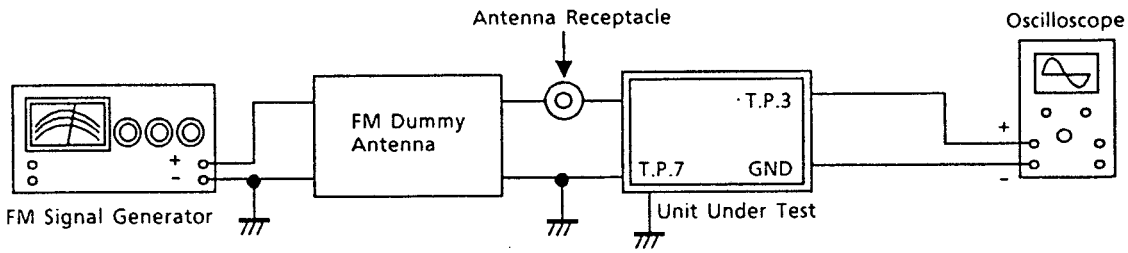

Figure 9

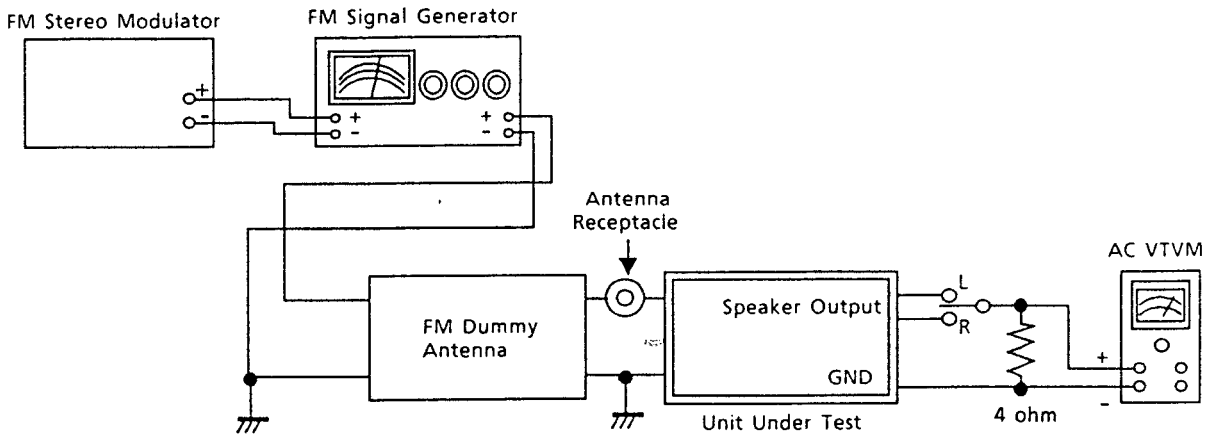

Figure 10

(3) Control Settings

Power Switch ..... ON
Fader Control ..... Center Position
Balance Control ..... Center Position
Treble/Bass Control ..... Center Position
Band Switch ..... FM
Others ..... OFF

(4) Adjustment Procedures

Step	Description		Connection	Signal Generator	Dial Control	Test Point	Adjustment
1	IF Adjustment		Figure 6	98.1MHz, 72dB (Mod. OFF)	98.1MHz	T.P.1 T.P.2	Adjust L2101 to 0±30mV.
2	Signal Meter Adjustment		Figure 7	98.1MHz, 46dB (Mod. 400Hz)	98.1MHz	T.P.4	Adjust VR2101 to 3±0.1V.
3	Noise Level Adjustment	(1)	Figure 8	98.1MHz, 72dB (Mod. 400Hz)	98.1MHz	Speaker Output	Adjust VR401 (VOLUME) to obtain 2V output. This value is 0dB.
		(2)	Figure 8	98.1MHz, -19dB (Mod. 400Hz)	98.1MHz	Speaker Output	Adjust VR2106 to -30±5dB output at SG level minimum.
4	Seek Stop Adjustment		Figure 9	98.1MHz, 26dB (Mod. OFF)	98.1MHz	T.P.3	Adjust VR2105 to obtain 27±5dB.
5	Stereo Separation Adjustment (Lch)		Figure 10	98.1MHz, 72dB (Stereo 1kHz, Lch only)	98.1MHz	Speaker Output	Adjust VR2104 for Rch output to be minimum and confirm Lch and Rch output level difference is more than 20dB.

Step	Description	Connection	Signal Generator	Dial Control	Test Point	Adjustment
6	Stereo Blend Adjustment (Lch)	Figure 10	98.1MHz, 46dB (Stereo 1kHz, Lch only)	98.1MHz	Speaker Output	Adjust VR2102 for Lch and Rch output level difference to be 8dB.
7	Stereo Separation Adjustment (Rch)	Figure 10	98.1MHz, 72dB (Stereo 1kHz, Rch only)	98.1MHz	Speaker Output	Proceed same adjustment under step 5 by alternating Lch and Rch.
8	Stereo Blend Adjustment (Rch)	Figure 10	98.1MHz, 46dB (Stereo 1kHz, Rch only)	98.1MHz	Speaker Output	Proceed same adjustment under step 6.

2 TAPE PLAYER SECTION

(1) Connections

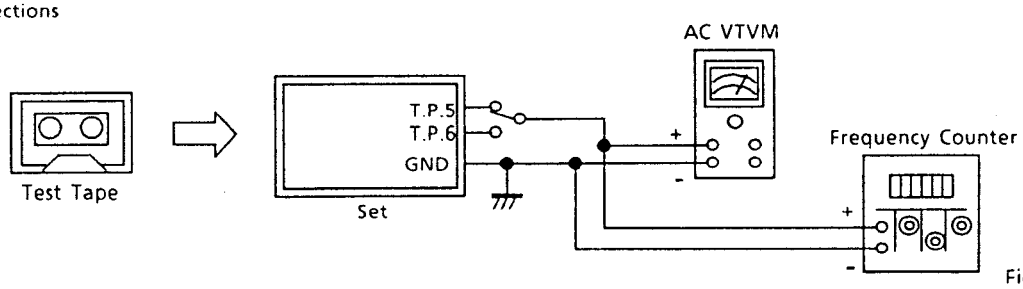

Figure 11

(2) Control Settings

Power Switch ..... ON
Fader Control ..... Center Position
Balance Control ..... Center Position
Treble / Bass Control ..... Center Position
Others ..... OFF

(3) Adjustment Procedures

Step	Description	Test Tape	Connection	Test Point	Adjustment Point	Adjustment
1	Head Azimuth Adjustment	MTT-114NB (14kHz)	Figure 11	T.P.5 (Lch) T.P.6 (Rch)	Head Azimuth Adjustment Screws (Figure 12)	Adjust for Max. and same level output at Normal and Reverse positions.
2	Dolby Level Adjustment	MTT-150 (400Hz)	Figure 11	T.P.5 (Lch) T.P.6 (Rch)	VR201 (Lch) VR202 (Rch)	Adjust for 388mV at T.P.5 (Lch) and T.P.6 (Rch).
3	Tape Speed Adjustment	MTT-111N (3kHz)	Figure 11	T.P.5 (Lch) or T.P.6 (Rch)	Tape Speed Adjustment (Figure 13)	Adjust for 2,970 to 3,090Hz at T.P.5 (T.P.6).

Adjustment Locations

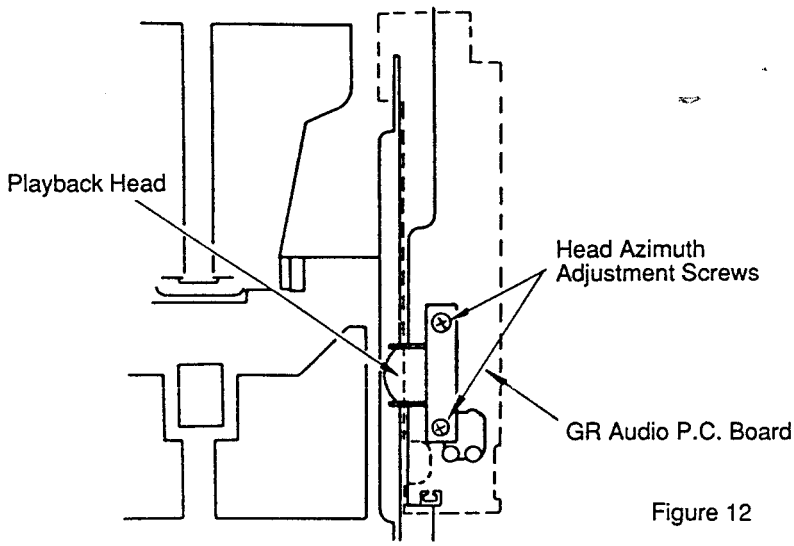

Figure 12

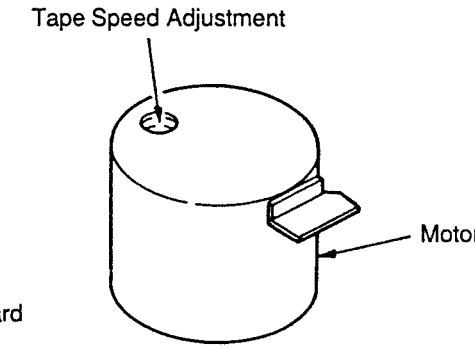

Figure 13

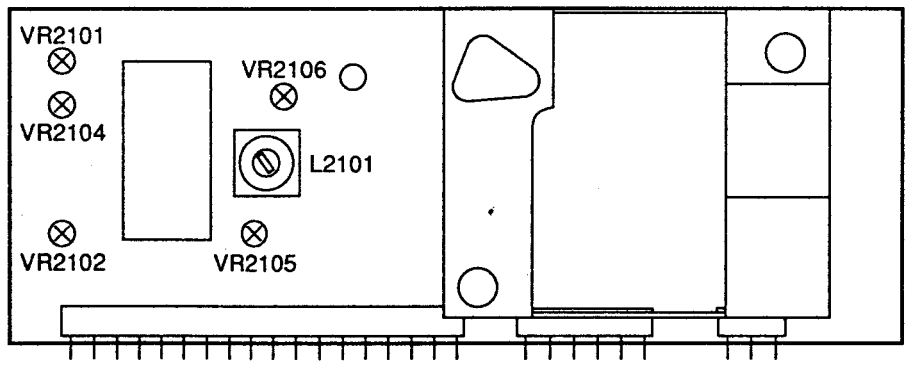

FM/MW/LW Tuner Unit (FE001)

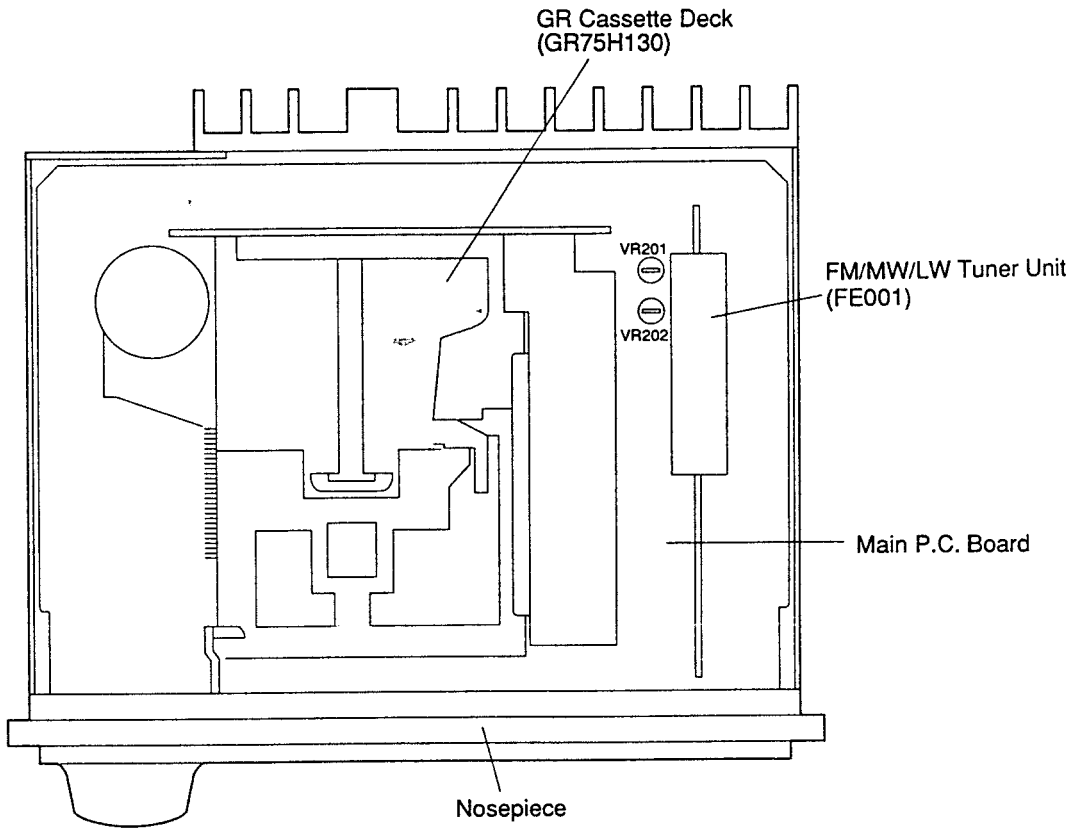

(Top Side)

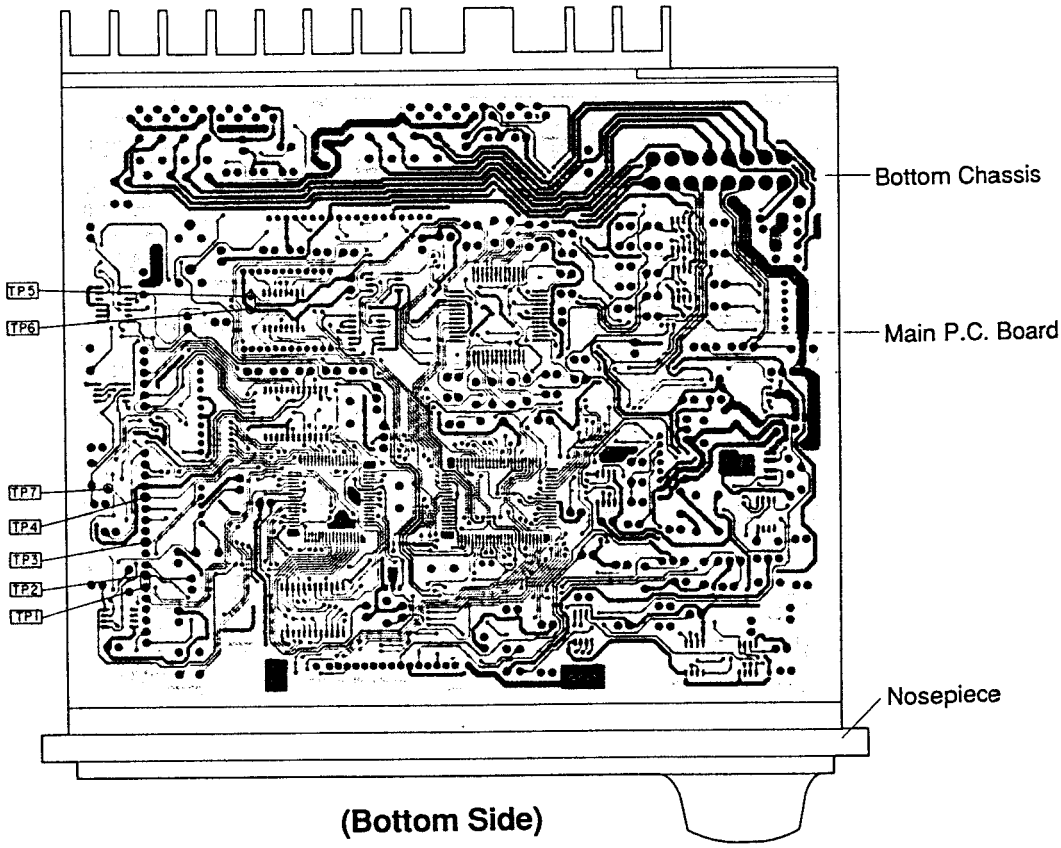

(Bottom Side)

Electrical Inspection Specifications

1. Measuring Conditions

(1) Power Supply : DC14 ± 0.2V
(2) Load Impedance : 4 ohm (Pre Out : 10k ohm)
(3) Power Output : 1W (2V)
(4) Signal Generator Output : SG Indication (SG of OPEN Indication)
(5) Control Settings
Fader — Center Position
Balance — Center position
Treble — Center Position
Bass — Center Position
(6) Standard Modulations

(FM) Mono : 400Hz 40kHz Deviation (MW/LW) 30% 400Hz
Stereo : 1kHz
Pilot : 8%

(7) Dummy Antenna

FM

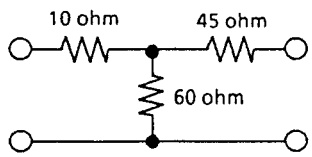

MW/LW

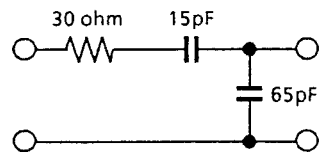

2. FM Inspection

Step	Item		SG				Spec.
			f (MHz)	Input(dB)	Mod.	ST.	
1	Usable Senstitvity		90.1	18	ON/OFF	MONO	S/N more than 30dB
			106.1	18	ON/OFF	MONO	S/N more than 30dB
2	Stop Level (DX)	To be not Stopped	98.1	21	ON	MONO	
		To be Stopped	98.1	32	ON	MONO	27 ± 5dB
	Stop Level (LOC)	To be not Stopped	98.1	46	ON	MONO	
		To be Stopped	98.1	67	ON	MONO	57 ± 10dB
3	Distortion		98.1	72	ON	MONO	less than 1%
4	Stereo Separation		98.1	72	ON	ON:1kHz Lch only	more than 20dB (IHF T-200)
5	Stereo Blend		98.1	43~49	ON	ON:1kHz Lch only	8dB separation
6	Power Output (10% Dist.)		98.1	72	ON (40kHz)	MONO	more than 11W (7524R) more than 14W (7525R)
7	Hi-Cut		98.1	72 26	ON	MONO 10kHz	-5 ± 4dB

Step	Item		SG				Spec
			f (MHz)	Input(dB)	Mod.	ST.	
8	TONE Control	TREBLE (10kHz)	98.1	72	ON	MONO 10KHz	MAX. +10±3dB
							MIN. -10±3dB
		BASS (100Hz)	98.1	72	ON	MONO 100Hz	MAX. +12±4dB
							MIN. -12±4dB
9	Loudness	100Hz	98.1	72	ON	MONO 100Hz	LD indicator should turned ON. Output should be increased. (T.INFO Pushed for 2 sec.)

3. MW Inspection

Step	Item		SG			Spec
			f (kHz)	Input(dB)	Mod.	
1	Usable Sensitivity		999	34	ON/OFF	S/N more than 20dB
2	Stop Level (DX)	To be not Stopped	999	23	ON	
		To be Stopped	999	44	ON	34±10dB
	Stop Level (LOC)	To be not Stopped	999	41	ON	
		To be Stopped	999	74	ON	L/D 30±12dB
3	Distortion		999	74	ON	less than 1.5%
4	Level difference from FM level		999	74	ON	-7±3dB

4. LW Inspection

Step	Item		SG			Spec
			f (kHz)	Input(dB)	Mod.	
1	Usable Sensitivity		216	41	ON/OFF	S/N more than 20dB
2	Stop Level (DX)	To be not Stopped	216	23	ON	
		To be Stopped	216	44	ON	34±10dB
	Stop Level (LOC)	To be not Stopped	216	44	ON	
		To be Stopped	216	74	ON	L/D 30±12dB
3	Distortion		216	74	ON	less than 1.5%

5. SDK Inspection

Step	Item	SG				Spec
		f (MHz)	Input(dB)	Mod.	ST.	
1	SK Lighting	98.1	0 26	ON	OFF SK, BK : ON	less than 26dB

6. RDS Inspection

Step	Item		SG				Spec
			f (MHz)	Input(dB)	Mod.	ST.	
1	Auto Follow Check		98.1	0 37	ON	ON : 1kHz Lch only SK, BK, DK : ON	Turn the **A.P.I.** switch on and confirm that the station name is displayed. After approximately 5 seconds, decrease - 20dB by turning the attenuator on and ensure that the output is available at the L channel only.
			98.1	72	ON		
2	T. INFO Check	Alarm Check	98.1	37	ON	OFF TP, TA : ON	less than 37dB
		Cut In Output Check	98.1	72	ON	OFF TP, TA : OFF	70 ± 10sec
		TAPE PAUSE Check	98.1	72	ON	ON TP, TA : ON	VR MIN. 350mV ± 3dB

7. TAPE Inspection

Step	Item		Test Tape	Spec
1	S/N		MTT-212N	JISA FILTER more than 52dB
2	Separation		MTT-141N	NOR : L only REV : R only more than 35dB 1kHz B.P.F
3	Frequency Response		MTT-256	High : more than - 3dB
				Low : more than - 3dB
4	Wow & Flutter		MTT-111N	less than 0.2%
5	M.S. operation	To be Stopped	ITT-610	**M.S.** indicator should be turned on.
		To be not Stopped	ITT-607E	
6	DOLBY Operation B type		C-60 (No Recoading)	◨ indicator should be tuned on. Output should be decreased.
7	PRE OUT Output		MTT-212N	more than 1V
			MTT-141N	Check L/R ch Output
8	Distortion		MTT-118N	less than 2%
9	Level difference from FM Level		MTT-212N	0 ± 3dB
10	Crosstalk		MTT-121N	1kHz B.P.F more than 45dB

Description of IC Terminal

16615W29 (IC401)

No.	Symbol	I/O	Terminal Description
1	KEY R1	I	Key-matrix signal input terminal.
2	KEY R2		
3	KEY R3		
4	KEY S0	O	Key-matrix signal output terminal.
5	KEY S1		
6	KEY S2		
7	KEY S3		
8	KEY S4		
9	KEY S5	O	Key-matrix signal input terminal.
10	GND	—	GND Short.
11	GND		
12	GND		
13	GND		
14	GND		
15	GND		
16	GND		
17	GND		
18	GND		
19	NC	—	Open.
20	RESET	I	System reset input.
21	X2	—	Ceramic terminal for system clock OSC.
22	X3		
23	$\overline{\text{WHT}}$/ORG	O	Output terminal for 1amp switching signal.
24	$\overline{\text{PWR ON}}$	O	System power supply Control terminal.
25	DATA	O	Serial data output to LCD driver.
26	$\overline{\text{CS}}$	O	Enables input for SCK and C/D terminals.
27	GND	—	GND short.
28	GND		
29	DIPS DATA	I	Indication data signal input from main microcomputer.
30	KEY DATA	O	Key data signal output to main microcomputer.
31	$\overline{\text{DISP CLK}}$	I	Communication sync signal input from main microcomputer.

No.	Symbol	I/O	Terminal Description
32	GND	—	GND short.
33	$\overline{BUSY}$	I	Busy signal input terminal showing LCD driver is processing internally.
34	NC	—	Open.
35	CE	I	CE signal input from main microcomputer.
36	DISP REQ	I	Indication data sync signal input from main microcomputer.
37	REMO-CON	I	Remote control data input.
38	VDD	—	Connect to VDD
39	VDD	—	Positive power supply.
40	C/$\overline{D}$	O	Command/data output for LCD driver.
41	CLK	O	System clock output for LCD driver.
42	RESET	O	Reset output terminal for LCD driver. Active High.
43	$\overline{SCK}$	O	Serial clock output terminal to LCD driver.
44	KEY R0	I	Key-matrix signal input.

45609W04 (IC501)

No.	Symbol	I/O	Terminal Description
1	LPF	I	Low pass signal input terminal from microphone.
2	GND	—	GND short.
3	VDD	—	Positive power supply.
4	VDD	—	Positive power supply.
5	GND	O	GND short.
6	PLY SOL.	O	Attracts PLAY SOL and maintains HEAD BASE moved forward.
7	RF SOL.	O	Sets FF, REW, CUE or REV mode by pulling RF SOL so that PINCH ROLLER is retracted from capastan shaft.
8	EJ. SOL	O	Performs EJECT operation by pulling EJECT SOL to engage EJECT GEARS and to rotate motor in clockwise direction.
9	MOTOR-CONT	O	Determines rotation direction of motor in GR mechanism.
10	O-MOTOR	O	Determines start and stop of the motor in GR mechanism.
11	F/R	O	Determines running direction of tape depending upon rotation direction of motor. This signal is used to switch running direction and PRE AMP EQ circuit.
12	L. O. FAST	O	Signal to vary gain when judging blank space between programs in MS-IC because of different signal levels in PLAY and CUE & REV.
13	PK IN SW	I	Switch to detect cassette is installed into cassette holder or not. Pulled-up through 10K~50Kohm resistor connected to BAT+5V.
14	METAL	I	Metal/Normal tape detector Switch. Pull up at 5V.
15	GND	—	GND short.
16	GND		

No.	Symbol	I/O	Terminal Description
17	GND	—	GND short.
18	7525/$\overline{7524}$	I	7525/7524 set up terminal.
19	GND	I	GND short.
20	TP ALM	I	Alarm Output/audio signal switching Output terminal.
21	NOSE PWR	O	Power supply control terminal for Front panel.
22	POW IC ON	O	Power IC stand by control terminal.
23	CONT	O	System power supply control terminal.
24	$\overline{\text{MUTE}}$	O	Audio mute signal output terminal.
25	OUT-REM	O	Remote signal output terminal.
26	OUT INT	O	Terminal which makes the then unit to PAUSE made in T. INFO on and TP OFF ALARM
27	$\overline{\text{IN PAU}}$	I	Pause signal input terminal.
28	$\overline{\text{IN INT}}$	I	Interrupt signal input terminal.
29	CHGR D OUT	O	CD Changer bus line data output terminal.
30	EV CLK	O	Clock output terminal for electrical volume (IC204).
31	EV DATA	O	Serial data output terminal for electrical volume (IC204).
32	EV CE	O	CE signal output terminal for electrical volume (IC204).
33	GND	—	GND potential terminal.
34	CHGR/ON	O	Audio signal switching output terminal.
35	TAPE/$\overline{\text{RADIO}}$	O	TAPE/RADIO audio signal switching output terminal.
36	$\overline{\text{DOLBY C}}$	O	Dolby C NR. ON signal output terminal.
37	$\overline{\text{DOLBY B}}$	O	Dolby B NR. ON signal output terminal.
38	DTS CE	O	Stand by control terminal to DTS microcomputer.
39	DTS STRT	—	Command sync signal input terminal from DTS microcomputer.
40	DISP CE	O	Stand by Control terminal to Display microcomputer (IC401).
41	KEY DATA	I	Key data input terminal from Display microcomputer (IC401).
42	DISP REQ	O	Indication data sync signal output to Display microcomputer (IC401).
43	DISP CLK	O	Communication sync signal output terminal to Display microcomputer (IC401).
44	DISP DATA	O	Serial data output terminal to Display microcomputer (IC401).
45	TP ALM ON	O	Switches audio signal when TP OFF alarm signal output.
46	$\overline{\text{DTS MUTE}}$	I	Audio mute signal input terminal from DTS microcomputer.
47	ACC+5	—	ACC power supply detection terminal.
48	CHGR IN	I	CD Changer bus line data input terminal.
49	GND	—	GND Short.
50	DTS STS	I	Serial data signal input terminal from DTS microcomputer.

No.	Symbol	I/O	Terminal Description
51	DTS CMD	O	Serial data signal input terminal to DTS microcomputer.
52	$\overline{\text{DTS SCK}}$	I	Communication sync signal input terminal from DTS microcomputer.
53	BAT+5	—	Battery power supply detection terminal.
54	GND	—	GND potential terminal.
55	X1	—	Crystal element connection terminal for sub system clock OSC.
56	X2	—	Crystal element connection terminal for sub system clock OSC.
57	GND	—	GND short.
58	X3	—	Ceramic element connection terminal for system clock OSC. (4.19MHz).
59	X4	—	Ceramic element connection terminal for system clock OSC. (4.19MHz).
60	$\overline{\text{RESET}}$	I	System reset input terminal.
61	DTS STNBY	—	Stand by pulse output terminal to DTS microcomputer.
62	GND	—	GND short.
63	GND	—	GND short.
64	GND	—	GND short.
65	GND	—	GND short.
66	GND	—	GND short.
67	GND	—	GND short.
68	GND	—	GND short.
69	GND	—	GND short.
70	GND	—	GND short.
71	GND	—	GND short.
72	DISP-RESET	—	Reset output terminal to Display microcomputer (IC401).
73	GND	—	Standard GND potential terminal for A/D converter.
74	$\overline{\text{NOSE ON}}$	I	Front panel detection terminal.
75	SELF VR	I	VR position signal terminal for audio control.
76	PK DN SW	I	Switch to detect cassette holder is moved down completely. Pulled-up through 10K~50Kohm resistor connected to BAT+5V.
77	RUN DET	I	Signal showing take-up reel is rotaring or not.
78	GND	—	GND short.
79	HPF	I	High pass signal input terminal from microphone.
80	MPF	I	Middle pass signal input terminal from microphone.

25699W31 (IC503)

No.	Symbol	I/O	Terminal Description
1	CE1	O	CE1 control terminal for S·RAM.
2	NC	—	Open.
3	$\overline{\text{DTS MUTE}}$	O	Audio mute output terminal.
4	$\overline{\text{7071 RESET}}$	O	Control the reset for LC7071.
5	50KREF	O	High output when REF frequency becomes 50kHz in FM mode.
6	$\overline{\text{RESET}}$	I	System reset input terminal.
7	X2	O	Output terminal for system clock OSC.
8	X1	—	Output terminal for system clock OSC.
9	Vss	—	GND terminal for device.
10	CE2-1	O	CE2 control terminal for S·RAM.
11	CE2-2	O	CE2 control terminal for S·RAM.
12	NC	—	Open.
13	NC		
14	NC		
15	A10	O	Input/Output terminal for S·RAM address signal.
16	A9		
17	A8		
18	AD7	I/O	Input/Output terminal for S·RAM address signal.
19	AD6		
20	AD5		
21	AD4		
22	AD3		
23	AD2		
24	GND	—	GND terminal for device.
25	AD1	I/O	Input/Output terminal for S·RAM address signal.
26	AD0		
27	LE	O	LE control terminal for latch.
28	DTS STB	I	Return from standby to DTS.
29	RDS CLOCK	I	Communication data sync signal input terminal from LC7071.
30	D START	I	Data sync signal input terminal from LC7071.
31	DATA	I	Serial data input terminal from LC7071.
32	DATA IN	I	Serial data input terminal.
33	AUDIO IN	I	Audio zero cross input terminal.

No.	Symbol	I/O	Terminal Description
34	DTS - START	I	Command sync signal input from main microcomputer.
35	DTS - CMD	I	Serial data input terminal from main microcomputer.
36	NC	—	Open.
37	NC		
38	DTS - CLK	I	Communication data sync signal input terminal from main microcomputer.
39	DTS - STS	O	Serial data output terminal to main microcomputer.
40	CA	I	Power supply terminal.
41	V_{DD}	—	Power supply terminal for device.
42	AV_{SS}	—	GND terminal for A/D converter.
43	AV_{REF}	I	Reference Voltage input terminal for A/D converter.
44	$\overline{ST}$	I	Stereo signal input terminal.
45	$\overline{SK}$	I	SK signal input terminal.
46	SEARCH	I	Search start level detector port.
47	MULTIPATH	I	Port detects multipath interference of station.
48	$\overline{ADJON}$	I	Port detects multipath interference of station.
49	S. METER	I	Signal meter input terminal.
50	$\overline{DK}$	I	DK signal input terminal.
51	$\overline{RDS}$	I	RDS signal input terminal.
52	CLK	O	Communication data sync signal output terminal.
53	DATA OUT	O	Serial data output terminal.
54	$\overline{LPE\ SW}$	O	LPF time constant switching terminal to obtain fast response in AF search and FM seek operation.
55	$\overline{IF\ MUTE}$	O	Mute output terminal to prevent shock noises in AF search operation.
56	CE	O	Data communication control signal output terminal.
57	NC	—	Open.
58	LW	O	LW band selection terminal.
59	FM/$\overline{AM}$	O	FM/AM (MW/LW) bands selection terminal.
60	L/$\overline{D}$	O	SEEK sensitivity switch control output terminal.
61	MONO	O	Stereo/Mono switch control output terminal.
62	CE	I	Terminal to make DTS in standby status.
63	SD	I	Station detector signal input terminal for FM/AM.
64	$\overline{WR}$	O	F-RAM $\overline{WE}$ control signal.

LCD Display

SEGMENT

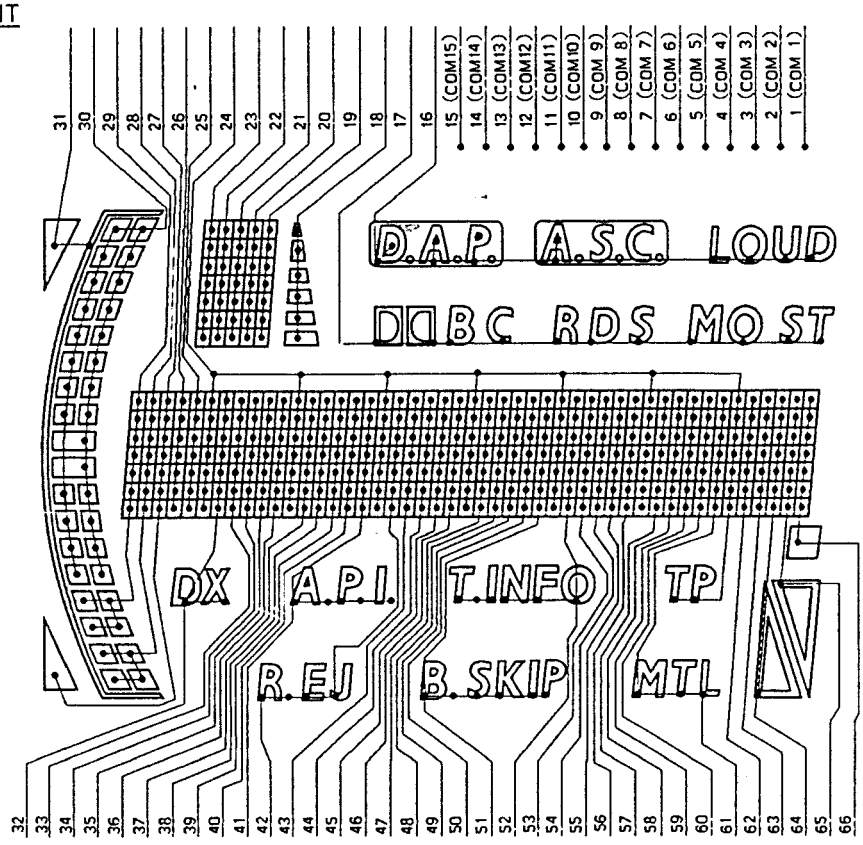

COMMON

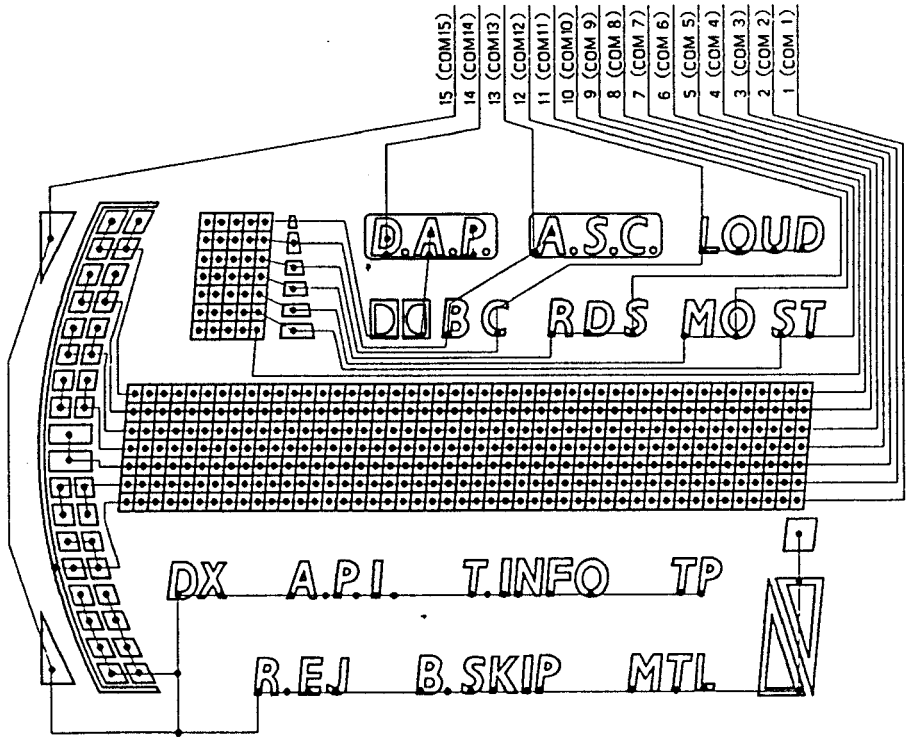

Packing Assembly Parts List

	Symbol No.	Part No.	Description
○	201	56S41054W28	Carton, Packing (Individual)
●	201	56S41054W22	Carton, Packing (Individual)
	202	56D41008W01	Tray, Packing (L)
	203	56D41008W02	Tray, Packing (R)
	204	15C80814F01	Case, Inner
	205	01V44500W45	Assy., Kit Installation
	206	07B64552F01	Bracket, Strap Receiver
	207	56C40990T36	Sack, Polyethylene
	208	01T45323W03	Power Supply & SP Output Connector
	209	68P40870W42	Owner's Manual
	210	15D42040W01	Carrying, Case

Symbol No.	Part No.	Description

Notes : ○ : For 7524R Model Only, ● : For 7525R Model Only, Others : Common.

Packing Method View

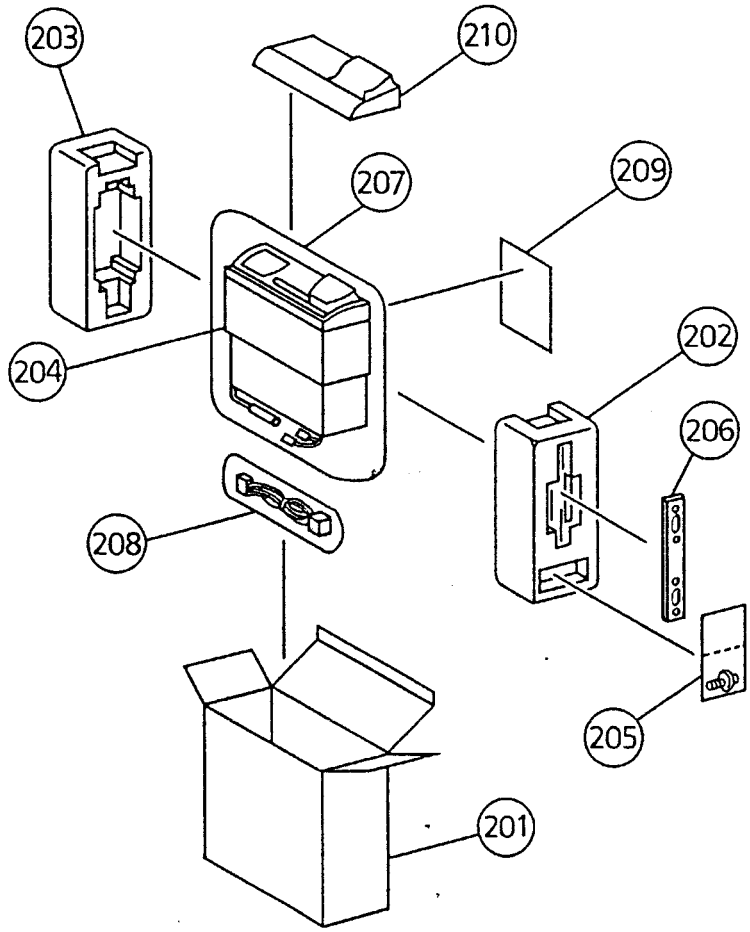

Tuner Schematic Diagram

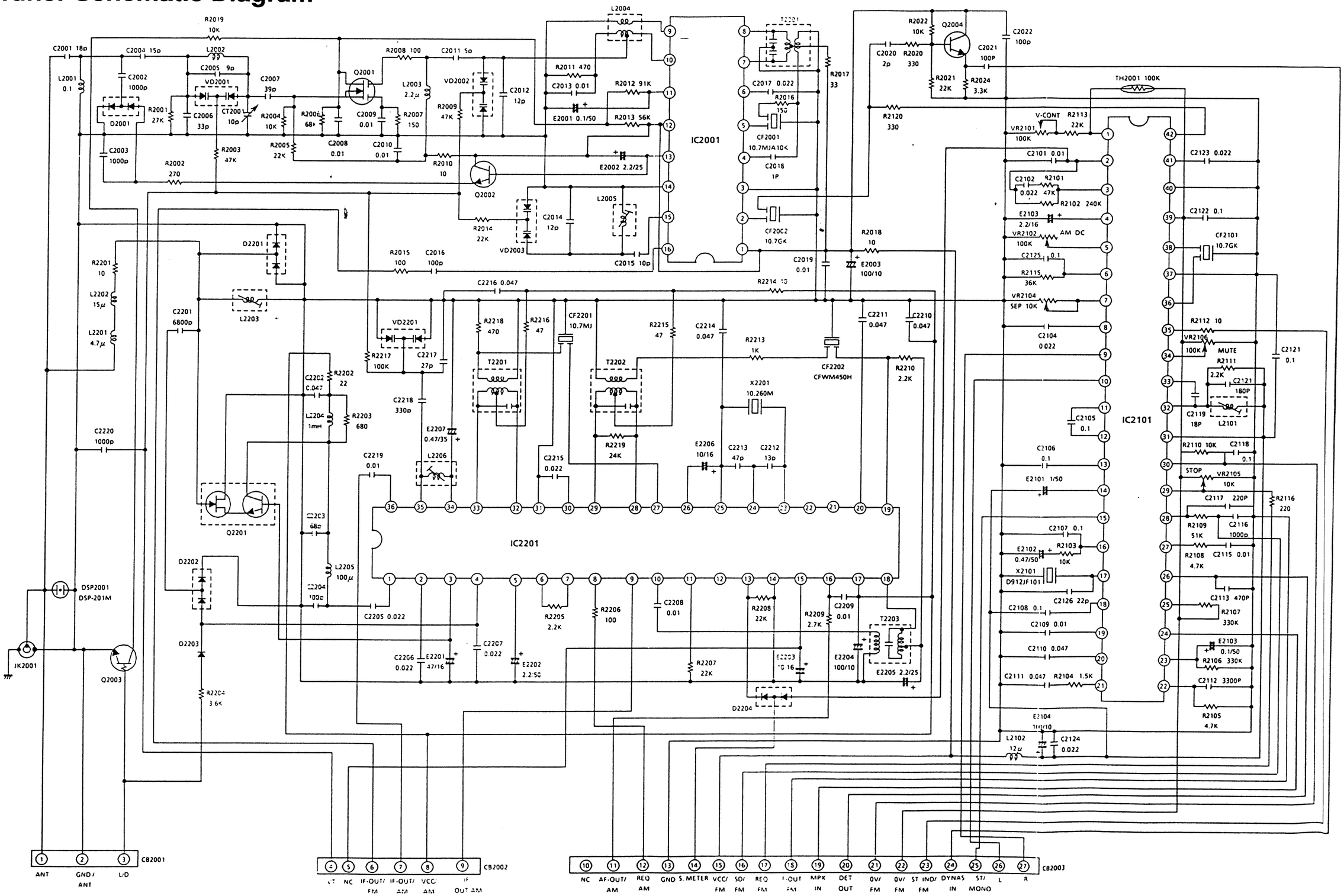

Block Diagram

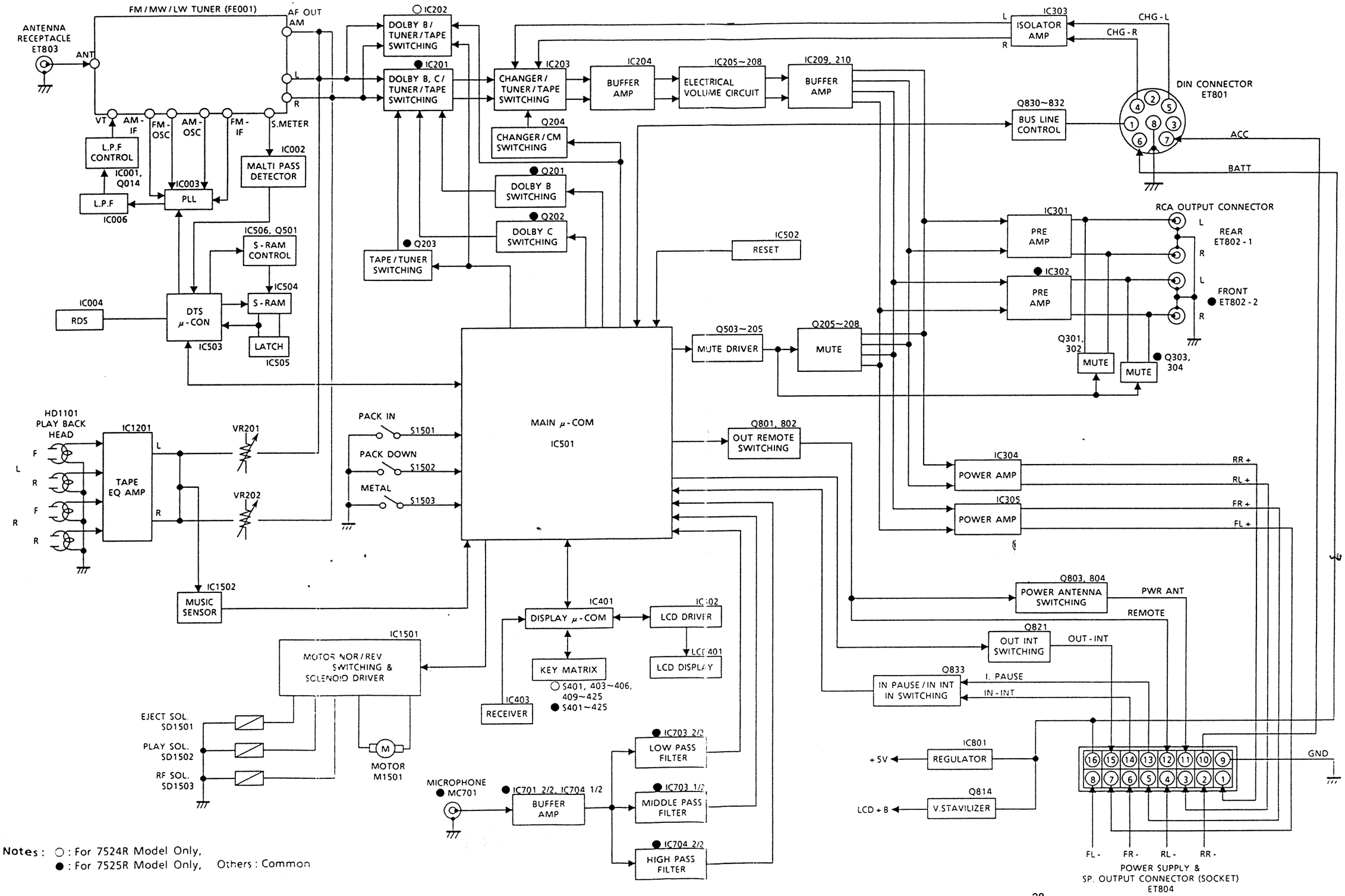

Notes : ○ : For 7524R Model Only,
● : For 7525R Model Only, Others : Common

Parts Layout on P.C. Boards and Wiring Diagram (1/2)

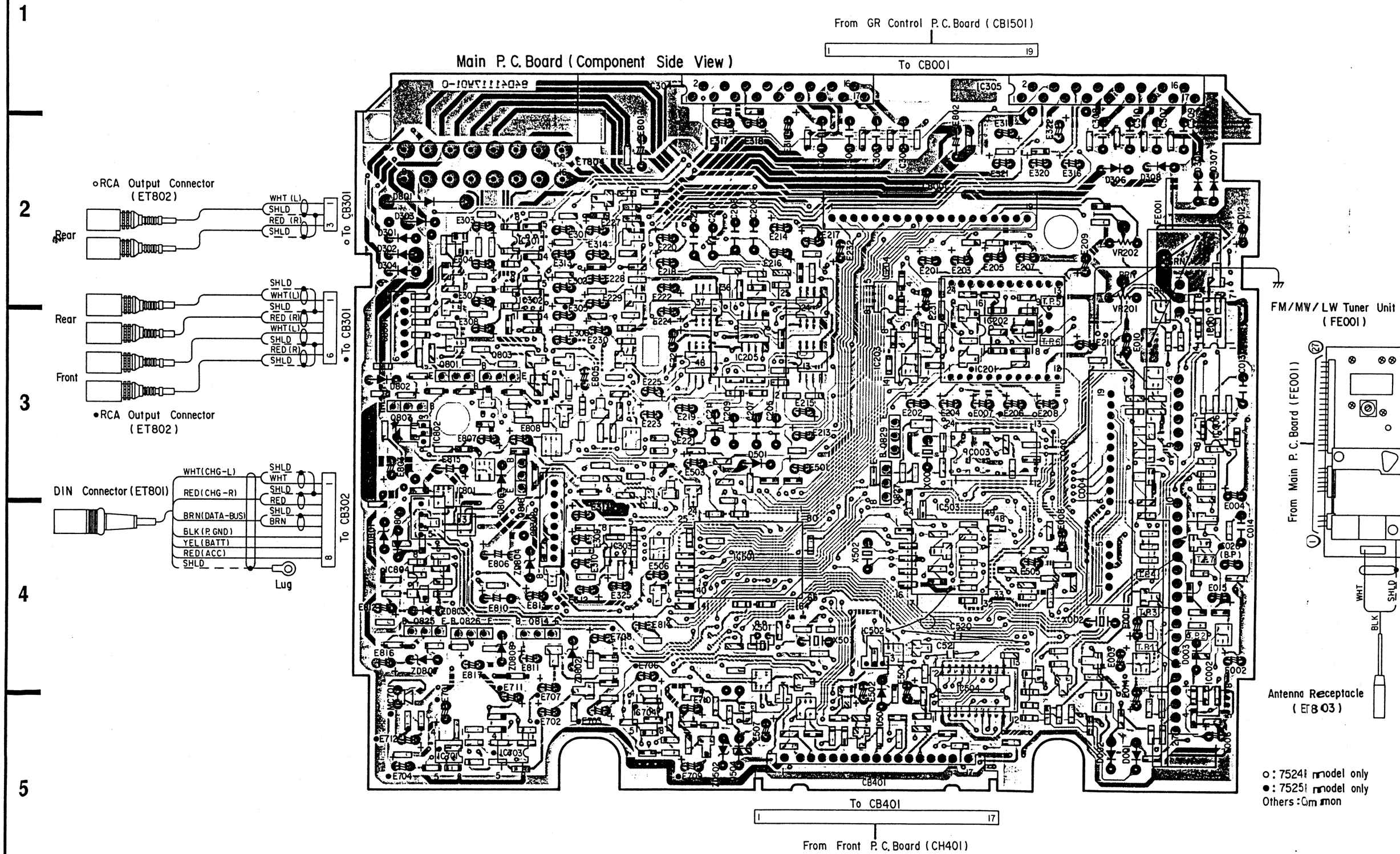

P. C. Board (CB1501)

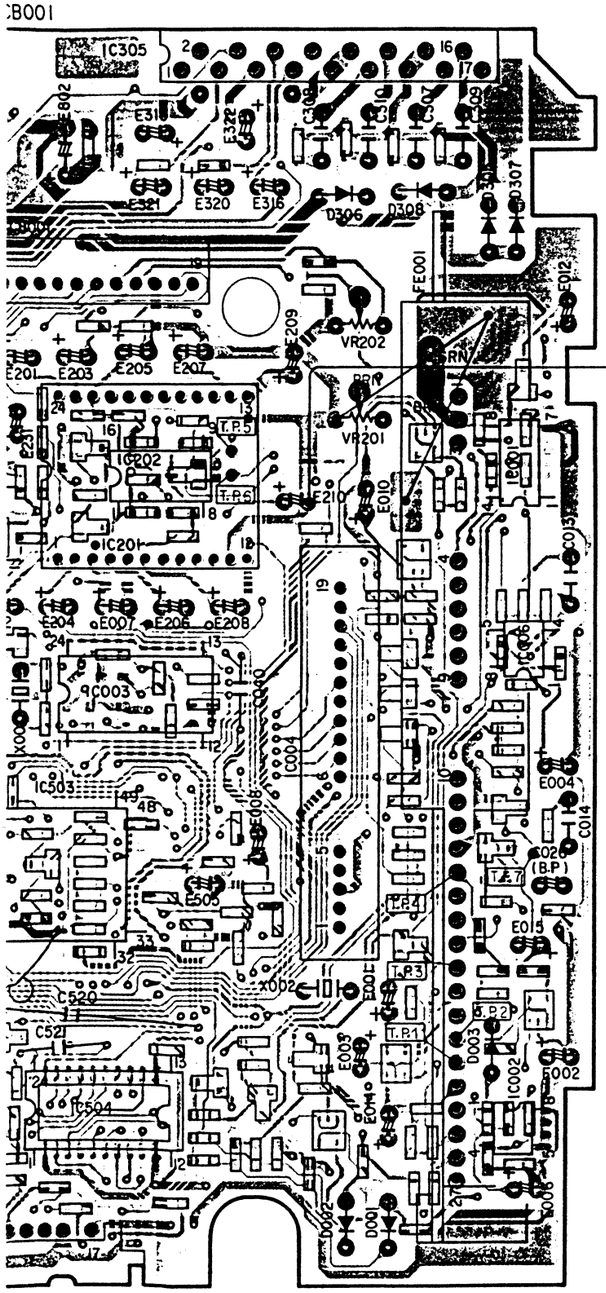

FM/MW/LW Tuner Unit
(FE001)

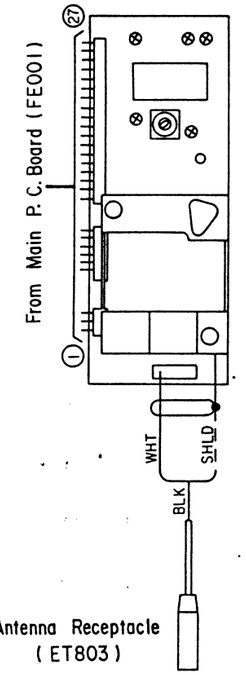

Antenna Receptacle
(ET803)

○ : 7524R model only
● : 7525R model only
Others : Common

Main P. C. Board (Foil Side View)

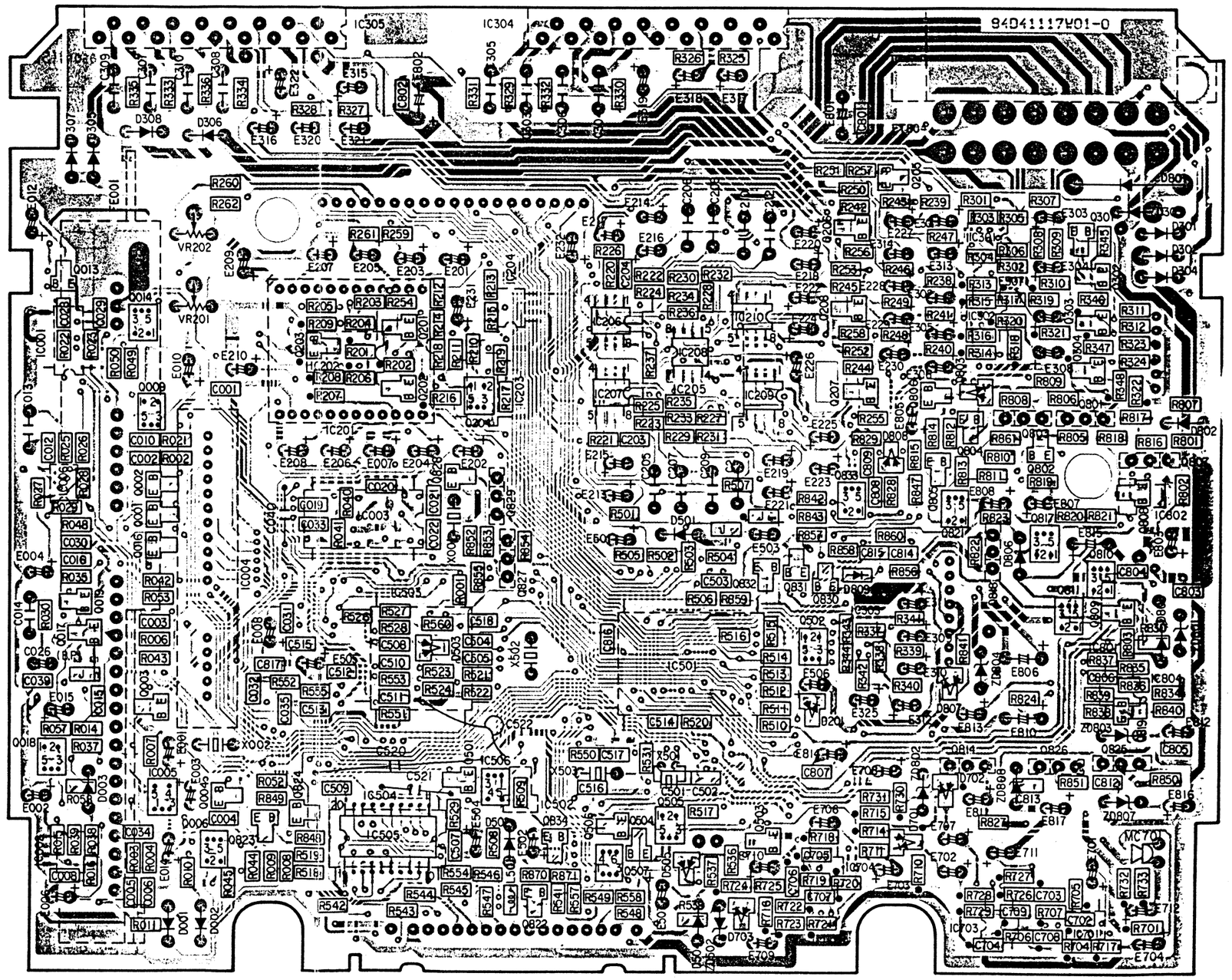

Orange Color Pattern : Component Side Pattern
Blue Color Pattern : Foil Side Pattern

7524R/ 7525R	7524R/ 7525R

Parts Layout on P.C. Boards and Wiring Diagram (2/2)

All P.C. Boards viewed from soldered side.

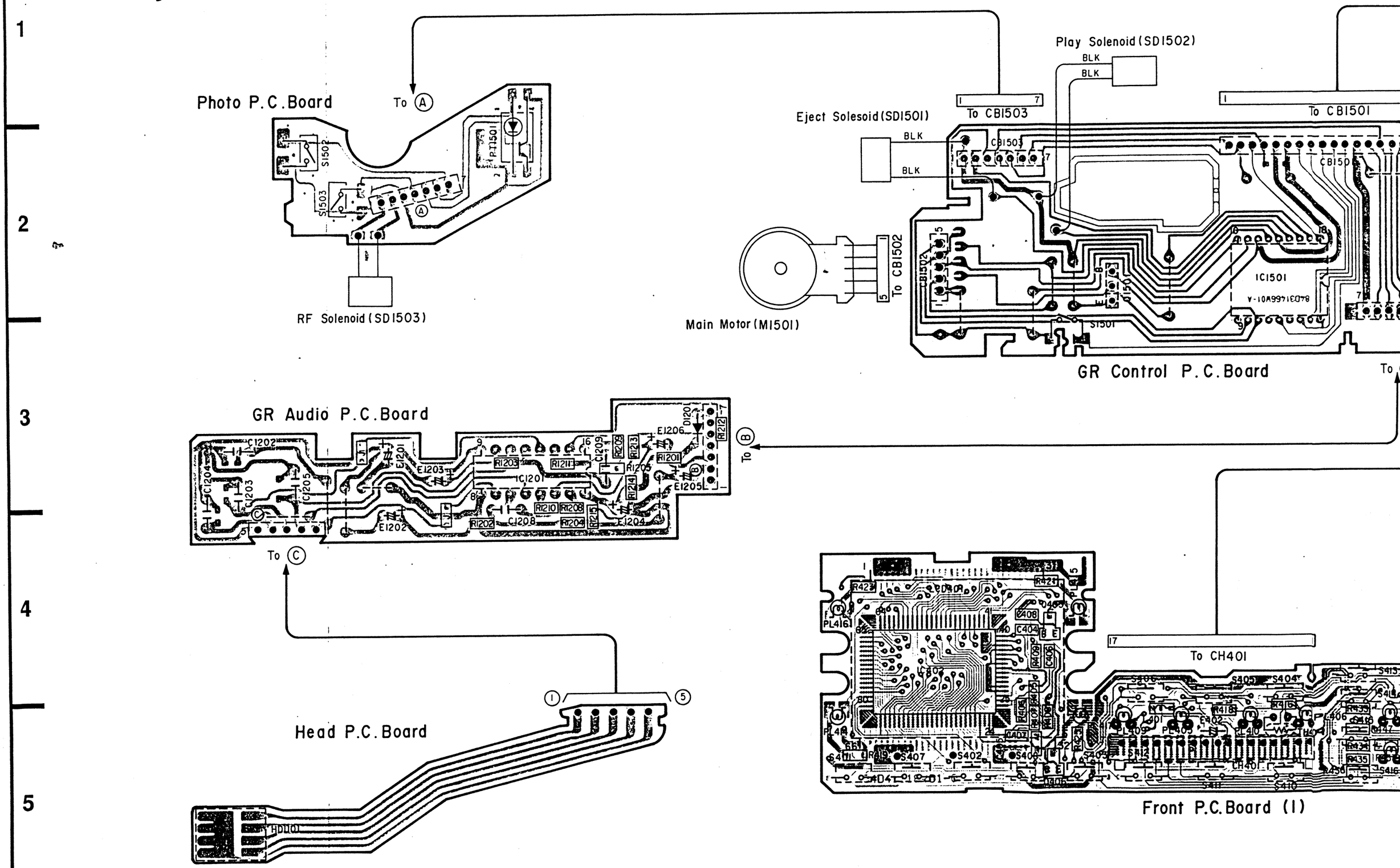

7524R/ 7525R	7524R/ 7525R

om soldered side.

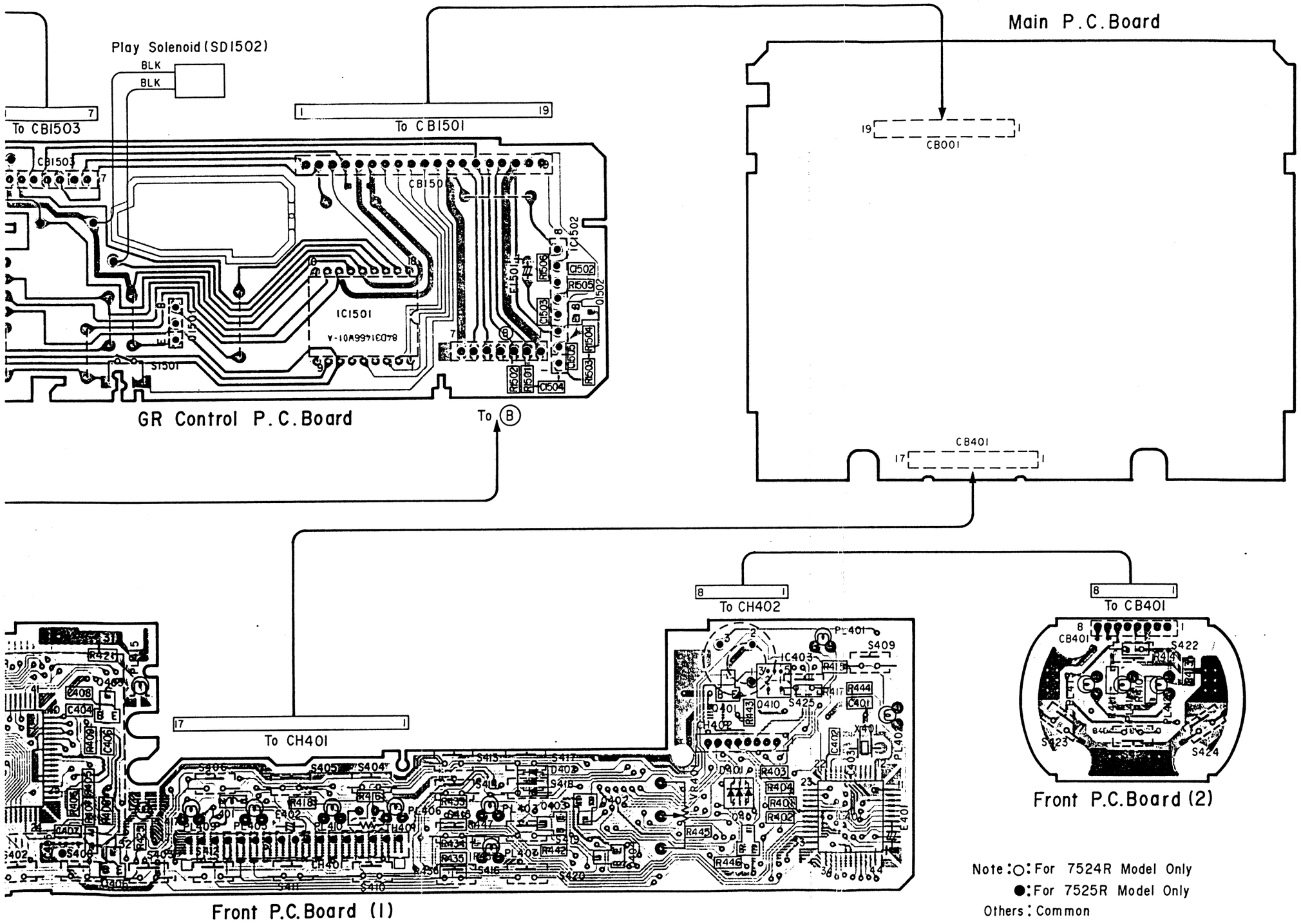

Note : ○ : For 7524R Model Only
● : For 7525R Model Only
Others : Common

Orange Color Pattern : Component Side Pattern
Blue Color Pattern : Foil Side Pattern

Schematic Diagram (1/4)

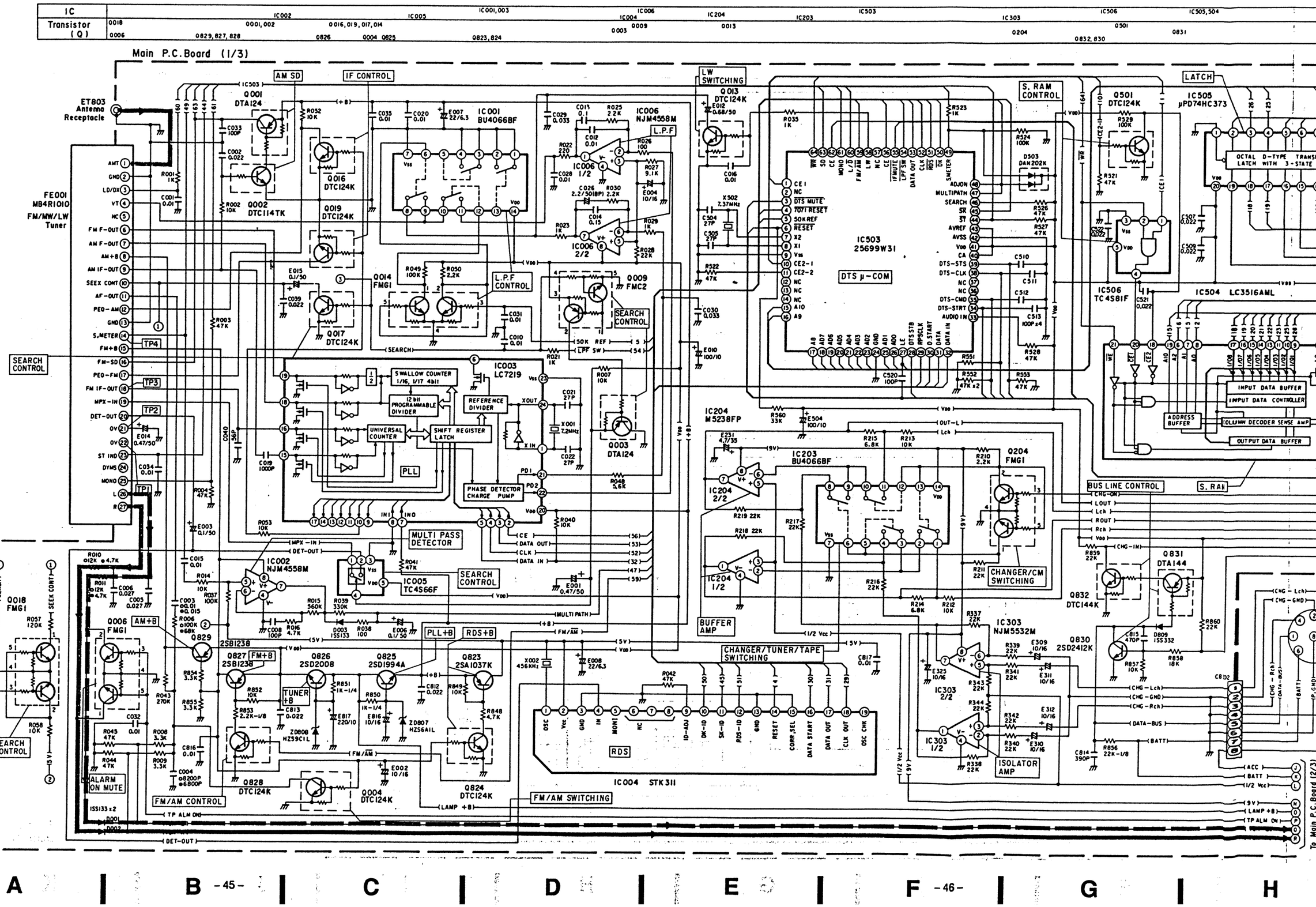

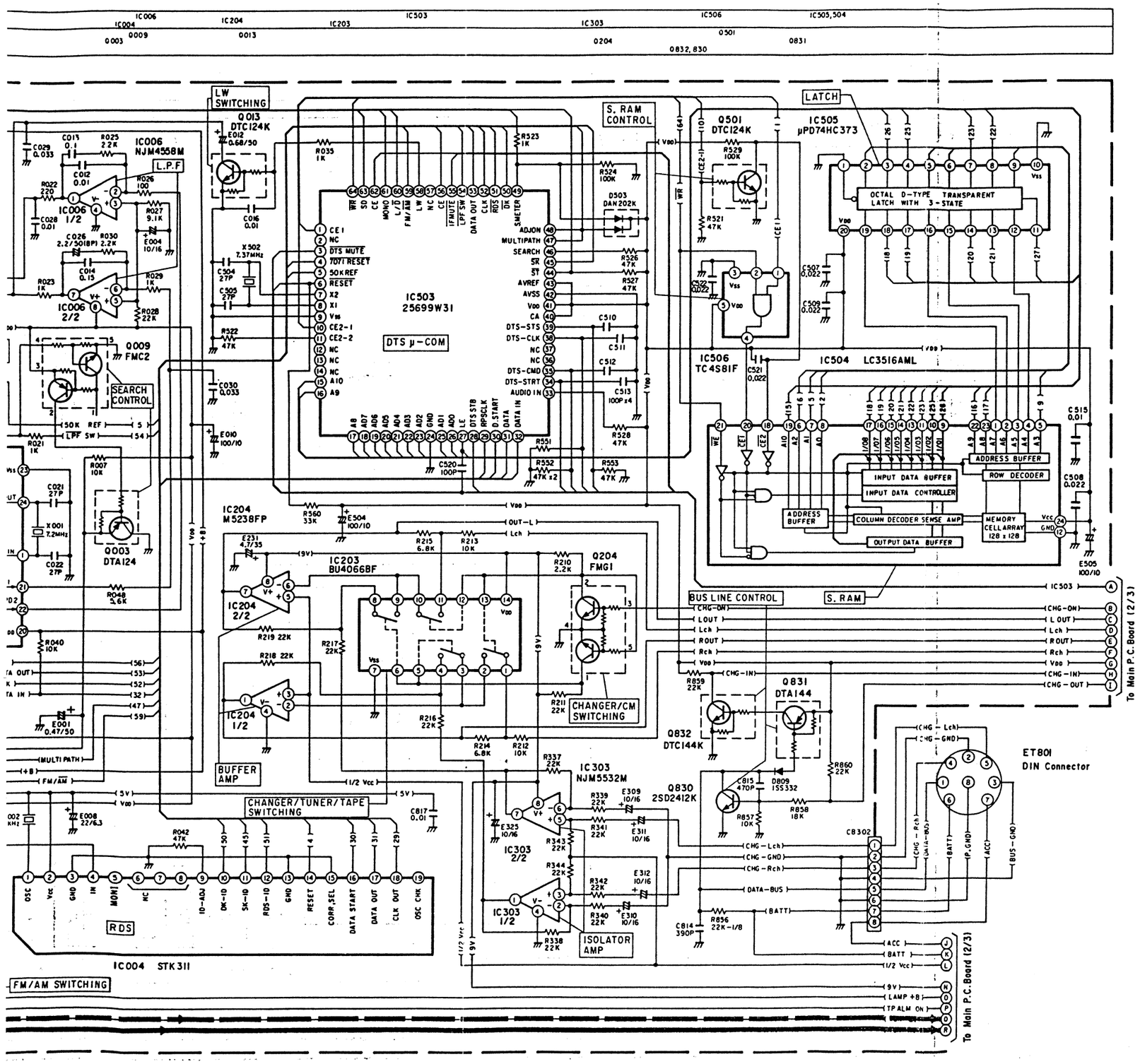

NOTES:

1. All resistance values are in ohms. K = 1,000
2. All capacitance values are in microfarads. $P = \frac{1}{1,000,000}$

IC001

1	0V	8	9V
2	0V	9	5.4V
3	0V	10	5.4V
4	0V	11	8.7V
5	N.C	12	0V
6	8.3V	13	9.1V
7	0V	14	9.1V

IC002

1	N.C
2	N.C
3	N.C
4	0V
5	4.8V
6	4.8V
7	4.8V
8	9V

IC003

1	2.2V	9	N.C		17	N.C	
2	0V	10	4.9V/0V	- /SEEK	18	0V/2.4V	FM/AM
3	PS	11	N.C		19	2.4V/0V	FM/AM
4	PS	12	N.C		20	4.9V	
5	PS	13	N.C		21	2.7V	
6	N.C	14	N.C		22	2.7V	
7	4.9V	15	0V		23	0V	
8	0V	16	0V		24	2.6V	

IC004

1	3.5V		11	4.8V/0.6V	SK OFF/ON
2	4.85V		12	4.8V/0.6V	RDS OFF/ON
3	0V		13	0V	
4	2.5V		14	4.9V	
5	0V		15	0V	
6	N.C		16	PS	
7	N.C		17	PS	
8	N.C		18	PS	
9	0V/0.6V	SK OFF/ON	19	2.2V	
10	4.8V/0.6V	DK OFF/ON			

IC005

1	2.5V
2	2.5V
3	0V
4	9.1V
5	9.1V

IC006

1	8.63V
2	0.5V
3	2.7V
4	0V
5	2.7V
6	2.7V
7	5.4V
8	9.1V

IC203

1	4.6V		8	4.6V	
2	4.6V		9	4.6V	
3	4.6V		10	4.6V	
4	4.6V		11	4.6V	
5	0V/9.1V	CM/CH	12	8.5V/0V	CM/CH
6	0V/9.1V	CM/CH	13	8.5V/0V	CM/CH
7	0V		14	9.1V	

IC204

1	4.6V
2	4.6V
3	4.6V
4	0V
5	4.6V
6	4.6V
7	4.6V
8	9.1V

IC303

1	4.6V
2	4.6V
3	4.6V
4	0V
5	4.6V
6	4.6V
7	4.6V
8	9.1V

IC503

1	5V		17	PS	33	PS		49	4.3V	
2	N.C		18	PS	34	PS		50	5V/0.6V	DK OFF/ON
3	5V/0V	MUTE OFF/ON	19	PS	35	PS		51	5V/0.6V	RDS OFF/ON
4	5V		20	PS	36	N.C		52	PS	
5	0V/5V	API OFF/ON	21	PS	37	N.C		53	PS	
6	4.9V		22	PS	38	PS		54	5V/0V	SEARCH OFF/ON
7	2.3V		23	PS	39	PS		55	0V/5V	SEARCH OFF/ON
8	2.3V		24	0V	40	5V		56	PS	
9	0V		25	PS	41	5V		57	N.C	
10	5V		26	PS	42	0V		58	0V/5V	LW OFF/ON
11	5V		27	PS	43	5V		59	5V/0V	FM/AM
12	N.C		28	PS	44	5V/0V	ST OFF/ON	60	0V/5V	DX/LO
13	N.C		29	PS	45	5V/0.6V	SK OFF/ON	61	0V/5V	MONO OFF/ON
14	N.C		30	PS	46	5V		62	5V	
15	PS		31	PS	47	4.6V		63	0V/5V	SD NO/YES
16	PS		32	PS	48	4.6V		64	5V	

IC504

1	PS	9	PS	17	PS
2	PS	10	PS	18	PS
3	PS	11	PS	19	PS
4	PS	12	0V	20	PS
5	PS	13	PS	21	PS
6	PS	14	PS	22	PS
7	PS	15	PS	23	PS
8	PS	16	PS	24	5V

IC505

1	0V	9	PS	17	PS
2	PS	10	0V	18	PS
3	PS	11	PS	19	PS
4	PS	12	PS	20	5V
5	PS	13	PS		
6	PS	14	PS		
7	PS	15	PS		
8	PS	16	PS		

IC506

1	5V
2	5V
3	0V
4	5V
5	5V

	E	C	B	MODE
0001	4.8V	0.1V	4.8V	
0002	0V	4.8V	0V	
0003	9.1V	0V	9.1V	
0004	0V	0V/0.8V	8.7V/0.8V	FM ON/OFF
0013	0V	0V/UNCONST.	4.7V/0V	LW ON/OFF
0016	0V	2.5V/0V	0V/3.1V	SEEK ON/OFF
0017	0V	0V/UNCONST.	4.6V/0V	SEEK ON/OFF
0019	0V	1.4V/0V	0V/3.1V	SEEK ON/OFF
0501	0V	0V/5V	5V/0V	POW ON/OFF
0823	4.9V	4.8V	4.2V	
0824	0V	0V	8.9V	
0825	4.9V	13.5V	5.5V	
0826	8.8V	13.5V	9.4V	
0827	8.9V	8.8V	8.2V	
0828	0V	0V	5V	
0829	8.9V	0V	8.8V	
0830	0V	13.6V	0V	
0831	5V	0V	5V	
0832	0V	5V	0V	

[Measuring Conditions]

- Power Supply Voltage : DC 14.4V
- Measuring Meter : Digital Multimeter
- Measuring Point Reference : Between Ground
- Measuring Conditions : No Signal Input
  - FM : 98.1 MHz
  - MW : 999kHz
  - LW : 216kHz
  - TAPE : Blank

	1	2	3	4	5	MODE
0006	1.3V/0V	1.3V/0V	0V/5V	0V	0V/5V	ALM OFF/ON
0009	-	9.2V/0V	9.2V	4.6V/0V	0V	AF SEARCH OFF/ON
0018	1.9V/0V	0V/3.6V	4.4V/0V	0V	0V/3.6V	AF SEARCH OFF/ON
0014	0V/9.1V	8.3V/0V	0V/5V	0V	8.3V/0V	APL OFF/ON
0204	0V/9.2V	8.4V/0V	0.1V/4.4V	0V	8.4V/0V	CM/CH

○ : 7524R Model Only
● : 7525R Model Only
Others : Common

Schematic Diagram (2/4)

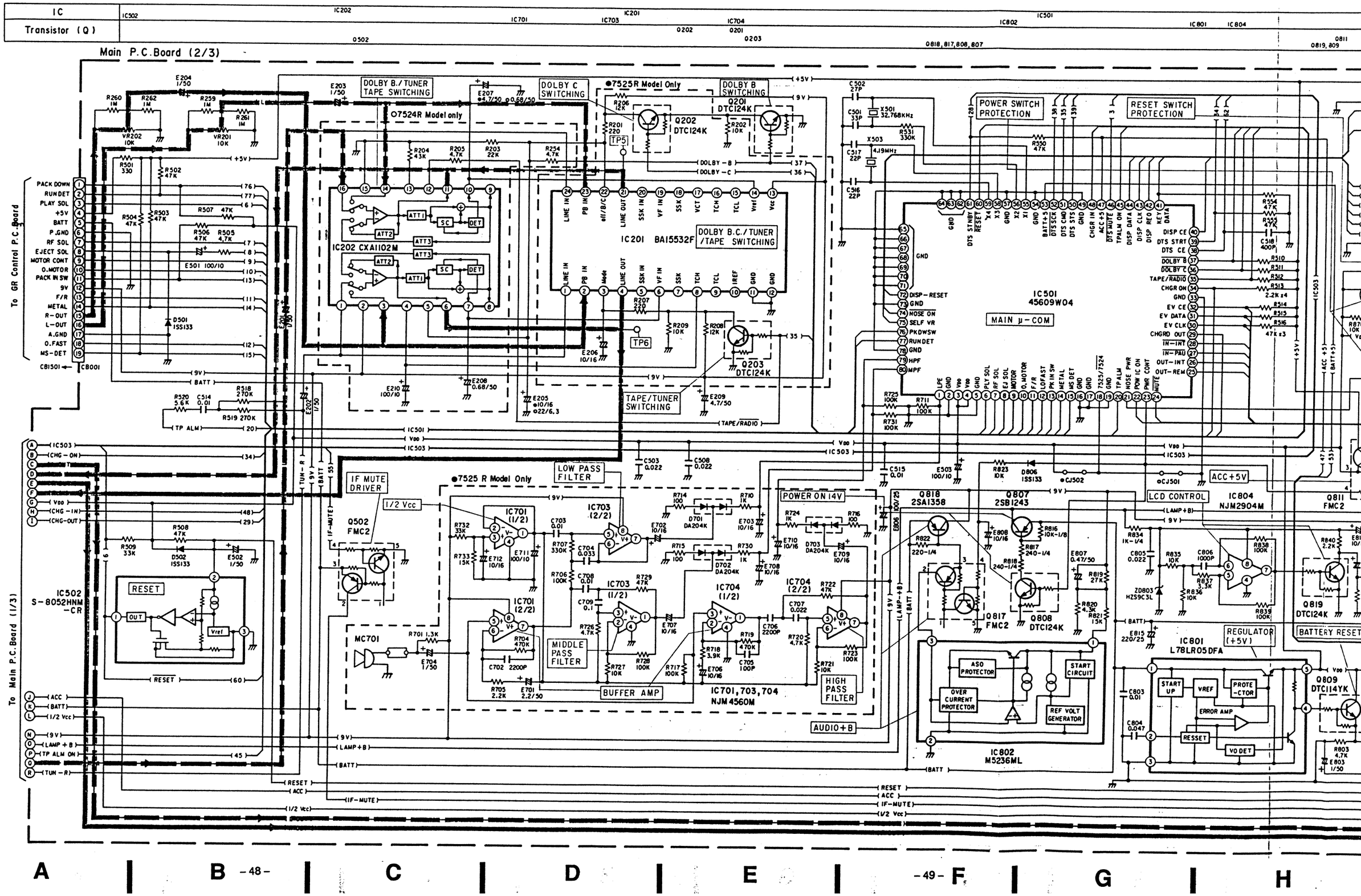

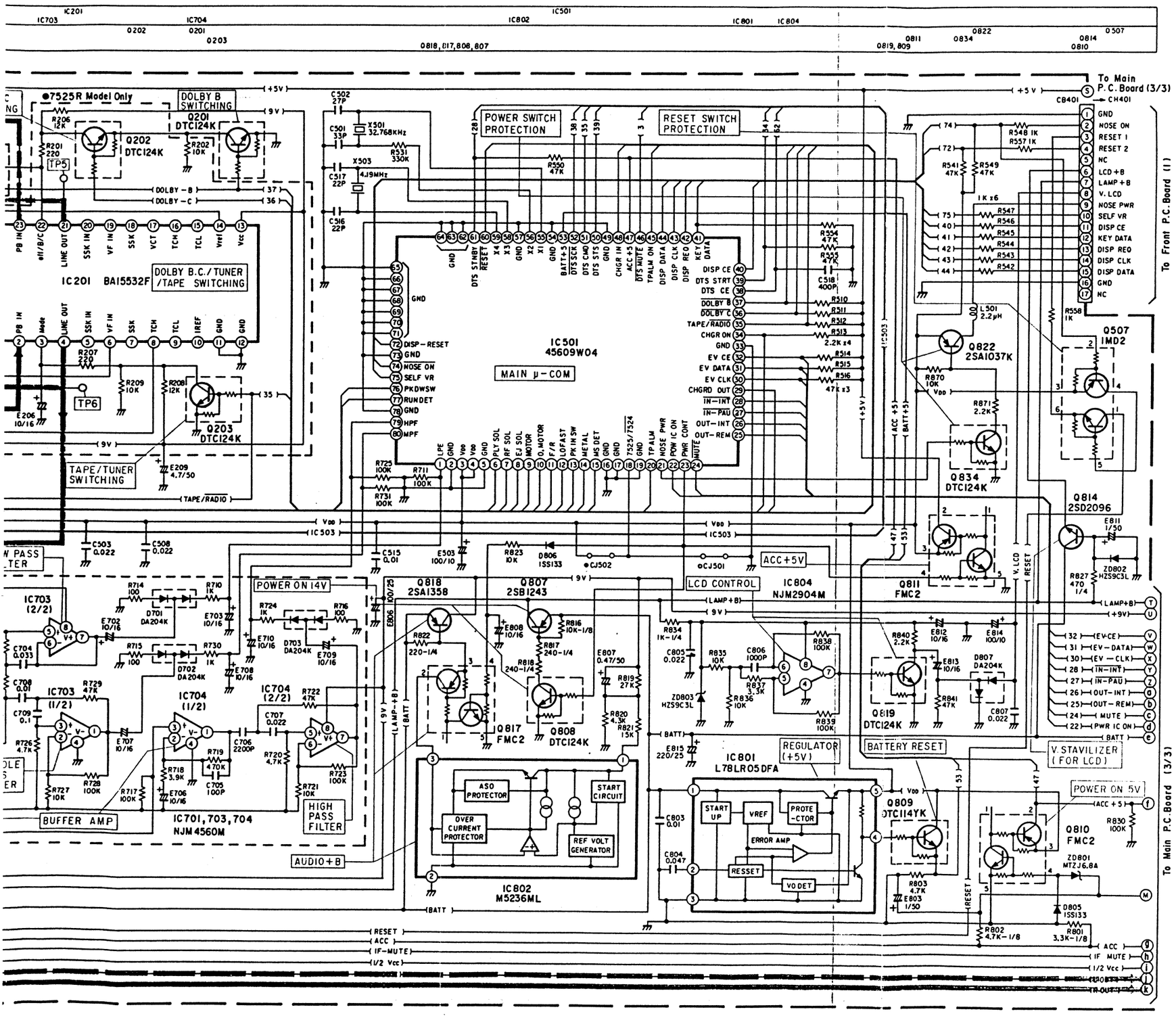

● IC201

1	4.6V		9	N.C	17	N.C	
2	4.6V		10	N.C	18	N.C	
3	4.2V/0V	R/T	11	0V	19	N.C	
4	4.6V		12	0V	20	N.C	
5	4.6V		13	9.1V	21	4.6V	
6	4.6V		14	4.6V	22	0V/5V/8.2V	OFF/B/C
7	N.C		15	N.C	23	4.6V	
8	0.4V		16	N.C	24	4.6V	

○ IC202

1	4.6V		9	4.7V	
2	9V		10	0.4V	
3	4.6V		11	4.7V	
4	4.6V		12	0.1V/4.7V	R/T
5	3.4V/0V	PB OFF/ON	13	1.3V	
6	4.7V		14	4.6V	
7	0.4V		15	0V	
8	4.7V		16	4.6V	

IC501

1	0V		21	5V/0V	NOSE YES/NO	41	PS		61	PS	
2	5V		22	5V/0V	POW ON/OFF	42	PS		62	0V	
3	5V		23	5V/0V	POW ON/OFF	43	PS		63	0V	
4	5V		24	5V/0V	MUTE OFF/ON	44	PS		64	0V	
5	5V		25	5V/0V	OUT-R OFF/ON	45	0V/5V	ALM OFF/ON	65	0V	
6	5V	PLAY	26	0V/5V	OUT-L OFF/ON	46	5V/0V	MUTE OFF/ON	66	0V	
7	5V	FF/REW	27	5V/0V	I-PAU OFF/ON	47	5V/0V	ACC ON/OFF	67	0V	
8	5V	EJEC	28	5V/0V	I-INT OFF/ON	48	PS		68	0V	
9	5V/0V	N/R	29	PS		49	0V		69	0V	
10	5V		30	PS		50	PS		70	0V	
11	5V/0V	F/R	31	PS		51	PS		71	0V	
12	5V/0V	PLY/FF.REW	32	PS		52	PS		72	5V/0V	NOSE ON/OFF
13	5V/0V	PACK IN/OUT	33	0V		53	5V/0V	BAT ON/OFF	73	0V	
14	5V/0V	MTL/NOR	34	0V/5V	CM/CH	54	0V		74	0.5V/5V	NOSE ON/OFF
15	5V/0V	MS	35	0V/4.5V	R/T	55	0V		75	2.5V	
16	0V		36	0V	DB C	56	2.5V		76	5V/0V	PACK IN/OUT
17	0V		37	0V	DB B	57	0V		77	PS	
18	5V/0V	25R/24R	38	5V/0V	POW ON/OFF	58	2.3V		78	0V	
19	0V		39	PS		59	2.4V		79	0V	
20	PS		40	5V/0V	NOSE OFF/ON	60	5V		80	0V	

IC502

1	5V
2	4.9V
3	0V

● IC701

1	2.9V
2	2.9V
3	2.9V
4	0V
5	2.8V
6	2.9V
7	2.9V
8	9.1V

● IC703

1	2.9V
2	2.9V
3	2.9V
4	0V
5	2.8V
6	2.8V
7	2.8V
8	9.1V

● IC704

1	2.9V
2	2.9V
3	2.8V
4	0V
5	2.9V
6	2.9V
7	2.9V
8	9.1V

IC801

1	14.4V
2	6.1V
3	0V
4	4.9V
5	5V

IC802

1	1.2V
2	0V
3	13.8V

IC804

1	N.C
2	N.C
3	N.C
4	0V
5	4.5V
6	4.4V
7	4.4V
8	9.1V

	E	C	B	MODE
Q201	0V	3.5V/0V/0V	0.1V/4.4V/4.4V	DOLBY B (ON/OFF/DB C)
● Q202	0V	8.2V/0V/4.7V	0.1V/4.4V/5.2V	DOLBY C (ON/OFF/DB B)
● Q203	0V	0V/4.2V	4.4V/0.1	TAPE MODE ON/OFF
Q807	14.2V	14.2V	13.5V	
Q808	0V	0V	5V	
Q809	4.2V	0V	4.8V	
Q814	10V	13.6V	10.5V	
Q818	13.6V	9.2V	13V	
Q819	0V	0.4V	4.2V	
Q822	5V	4.9V	4.3V	
Q834	0V	0V	5V	

	1	2	3	4	5	6	MODE
Q502	–	0V/13.8V	13.8V	0V/5V	0V		AF SEARCH OFF/ON
Q507	4.9V	0.5V	5V	5V	5V	5V	
Q810	–	5V/0V	5V/5V	4.2V/0V	0V		ACC ON/OFF
Q811	–	4.8V/0V	5V	4.1V/0V	0V		POW ON/OFF
Q817	–	13.6V/0V	13.6V/14.4V	3.2V/0V	0V		POW ON/OFF

[Measuring Conditions]
- Power Supply Voltage : DC 14.4V
- Measuring Meter : Digital Multimeter
- Measuring Point Reference : Between Ground
- Measuring Conditions : No Signal Input
  - FM : 98.1 MHz
  - MW : 999kHz
  - LW : 216kHz
  - TAPE : Blank

○ : 7524R Model Only
● : 7525R Model Only
Others : Common

NOTES:
1. All resistance values are in ohms. K = 1,000
2. All capacitance values are in microfarads. $P = \frac{1}{1,000,000}$

Schematic Diagram (3/4)

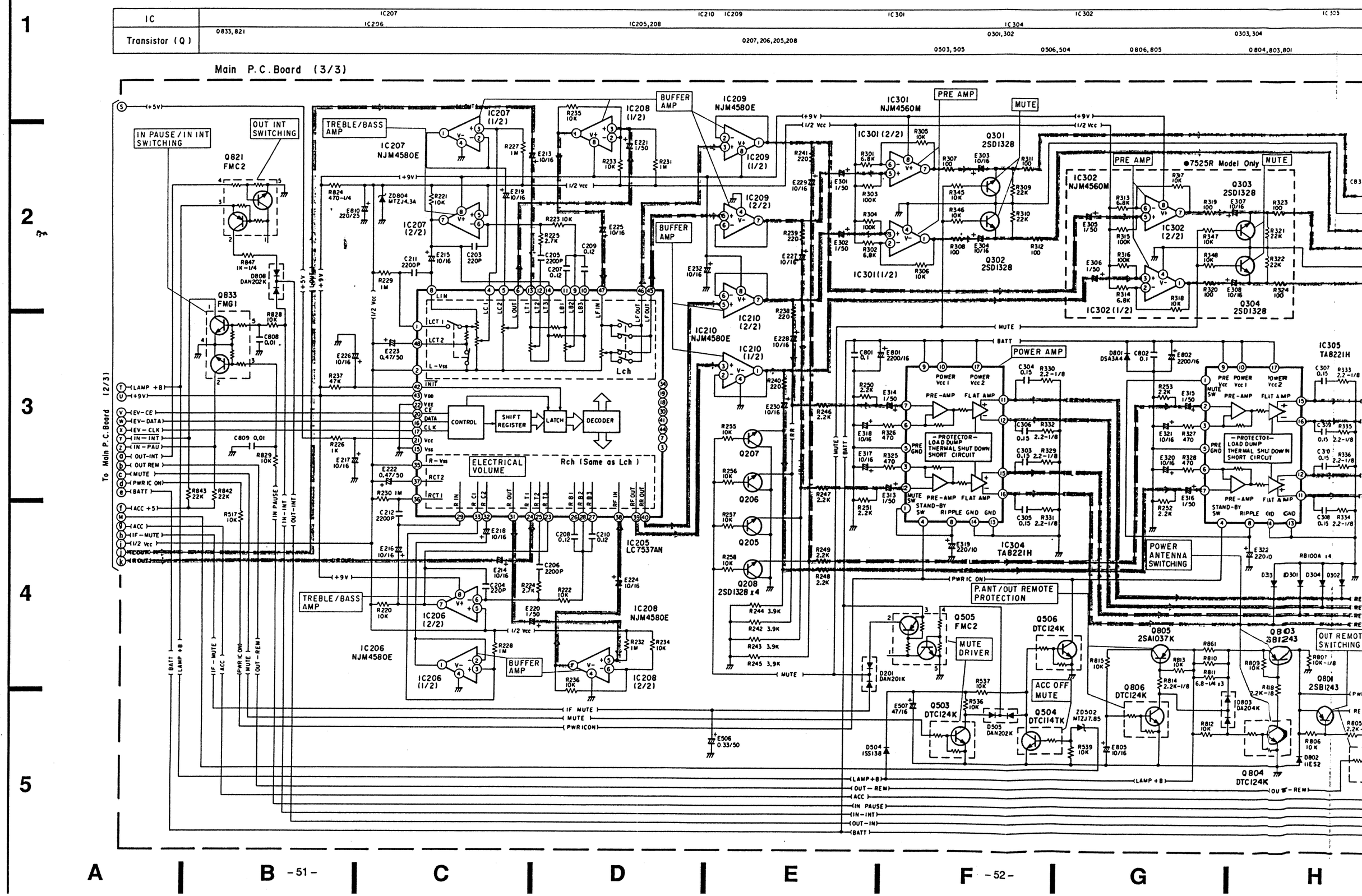

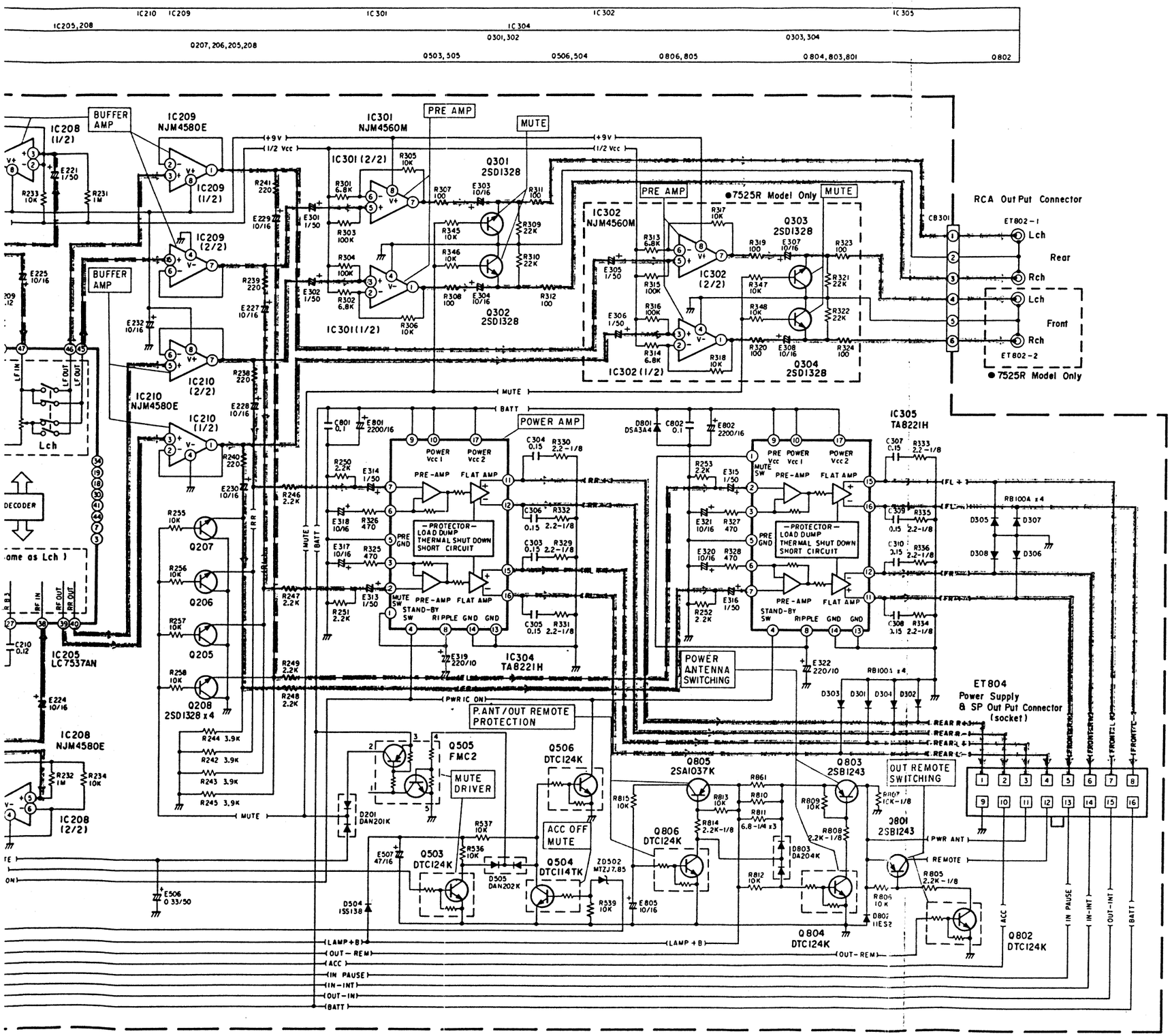

IC205					
1	4.2V	17	PS	33	4.6V
2	4.6V	18	N.C	34	N.C
3	N.C	19	N.C	35	4.6V
4	4.6V	20	PS	36	4.2V
5	4.6V	21	4.9V	37	4.6V
6	4.6V	22	0V	38	4.6V
7	N.C	23	4.6V	39	4.6V
8	4.6V	24	4.6V	40	4.6V
9	4.6V	25	4.6V	41	N.C
10	4.6V	26	4.6V	42	9.1V
11	4.6V	27	4.6V	43	9.1V
12	4.6V	28	4.6V	44	N.C
13	4.6V	29	4.6V	45	4.6V
14	4.6V	30	N.C	46	4.6V
15	0V	31	4.6V	47	4.6V
16	PS	32	4.6V	48	4.6V

IC206	
1	4.6V
2	4.6V
3	4.6V
4	0V
5	4.6V
6	4.6V
7	4.6V
8	9.1V

IC207	
1	4.6V
2	4.6V
3	4.6V
4	0V
5	4.6V
6	4.6V
7	4.6V
8	9.1V

IC208	
1	4.9V
2	4.8V
3	4.4V
4	0V
5	4.4V
6	4.8V
7	4.9V
8	9.1V

IC209	
1	4.6V
2	4.6V
3	4.6V
4	0V
5	4.6V
6	4.6V
7	4.6V
8	9.1V

IC210	
1	4.6V
2	4.6V
3	4.6V
4	0V
5	4.6V
6	4.6V
7	4.6V
8	9.1V

IC301	
1	4.7V
2	4.7V
3	4.6V
4	0V
5	4.6V
6	4.7V
7	4.7V
8	9.1V

● IC302	
1	4.7V
2	4.7V
3	4.6V
4	0V
5	4.6V
6	4.7V
7	4.7V
8	9.1V

IC304,305					
1	5.8V	7	5.8V	13	0V
2	5.8V	8	5.8V	14	0V
3	5.8V	9	14.3V	15	6.9V
4	3.4V	10	14.3V	16	6.9V
5	0V	11	6.9V	17	14.3V
6	5.8V	12	6.9V		

	E	C	B	MODE
Q205	0V	0V	0.7V/0V	MUTE ON/OFF
Q206	0V	0V	0.7V/0V	MUTE ON/OFF
Q207	0V	0V	0.7V/0V	MUTE ON/OFF
Q208	0V	0V	0.7V/0V	MUTE ON/OFF
Q301	0V	0V	0.8V/0V	MUTE ON/OFF
Q302	0V	0V	0.8V/0V	MUTE ON/OFF
●Q303	0V	0V	0.8V/0V	MUTE ON/OFF
●Q304	0V	0V	0.8V/0V	MUTE ON/OFF
Q503	0V	9.6V/0V	0V/5V	MUTE ON/OFF
Q504	0V	0V/9.5V	3.6V/0V	ACC ON/OFF
Q506	0V	3.4V/0V	0V/9.5V	ACC ON/OFF
Q801	13.5V	13.5V	12.8V	
Q802	0V	0V	5V	
Q803	13.5V	13.5V	12.9V	
Q804	0V	0V	9.4V	
Q805	13.5V	0V	13.5V	
Q806	0V	13.5V	0V	

	1	2	3	4	5	MODE
Q505	–	0V/13.8V	13.8V	0V/8.7V	0V	MUTE OFF/ON
Q821	–	13.7V/0V	13.7V/13.7V	5V/0V	0V	TA, DK ON/OFF
Q833	5V/0V	5V/0V	0V/9.7V	0V	0V/9.7V	IN-INT or PAU OFF/ON

[Measuring Conditions]
- Power Supply Voltage : DC 14.4V
- Measuring Meter : Digital Multimeter
- Measuring Point Reference : Between Ground
- Measuring Conditions : No Signal Input
  - FM : 98.1 MHz
  - MW : 999kHz
  - LW : 216kHz
  - TAPE : Blank

○ : 7524R Model Only
● : 7525R Model Only
Others : Common

NOTES:
1. All resistance values are in ohms. K = 1,000
2. All capacitance values are in microfarads. $P = \frac{1}{1,000,000}$

7524R/
7525R

7524R/
7525R

Schematic Diagram (4/4)

IC	IC403	IC1201	IC1502	IC401	IC1501	IC402
Transistor (Q, PT)	Q406, Q405, Q404, Q403	Q410, Q407, Q402	Q401	Q1502	Q1501	

* MARKED

	S401	S402	S404	S407	S408	S415
○ 7524R	POWER	—	I/ B	—	—	P.T./SCAN
● 7525R	PWR/A.S.U.	MUTE	I/ B·C	A.S.C.	P.T.	MONO/SCAN

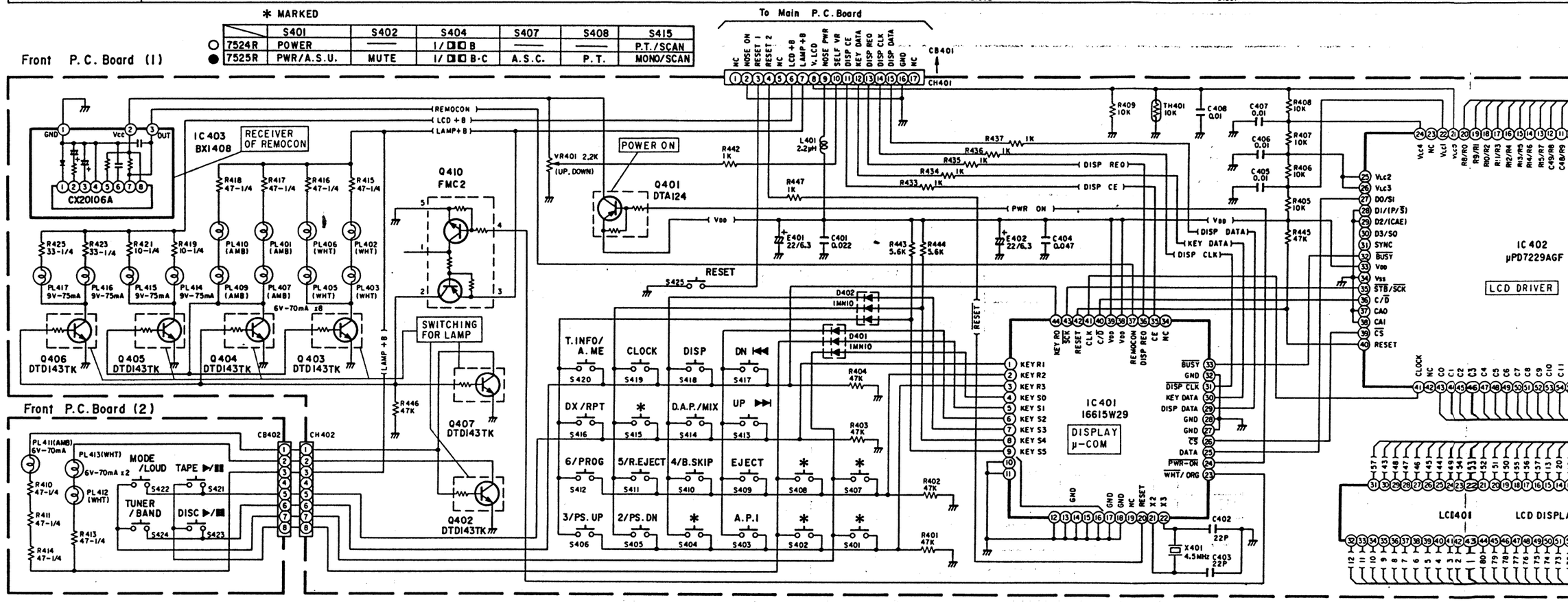

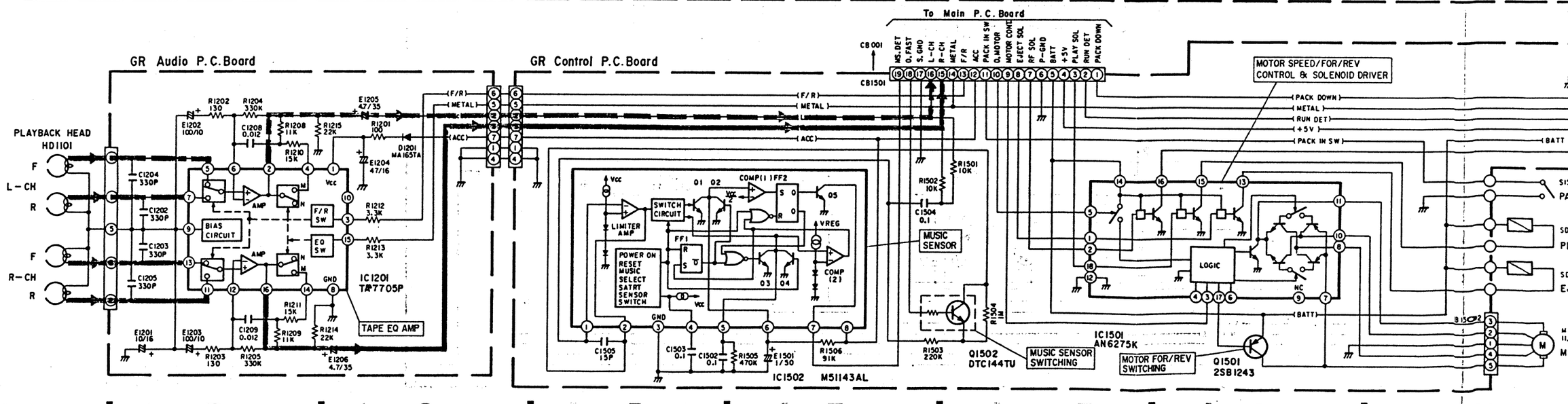

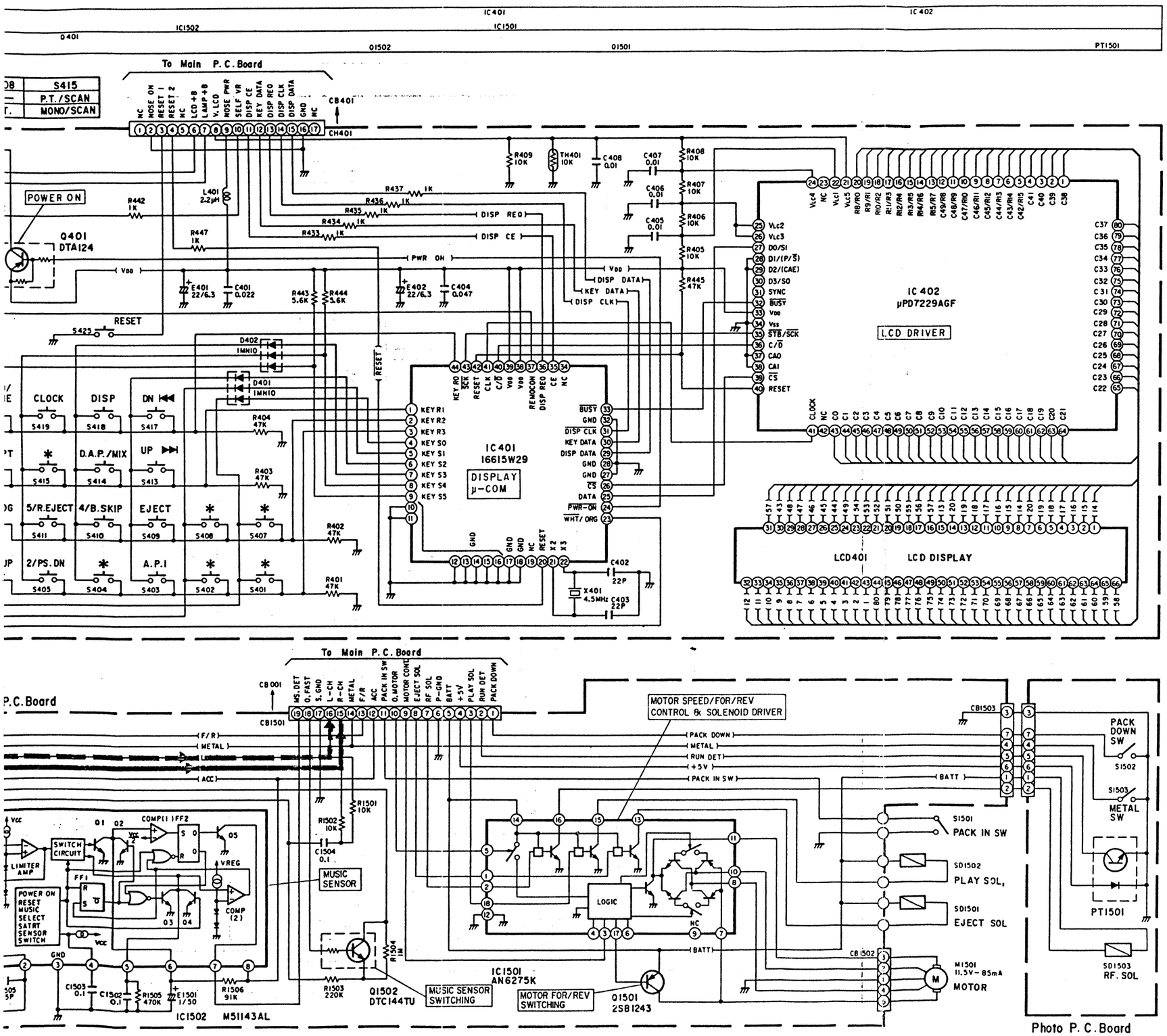

IC401

1	PS	17	0V		33	PS	
2	PS	18	0V		34	N.C	
3	PS	19	N.C		35	5V/0V	ACC ON/OFF
4	PS	20	5V		36	PS	
5	PS	21	2.6V		37	PS	
6	PS	22	2.7V		38	PS	
7	PS	23	0V/5V	WHT/ORG	39	PS	
8	PS	24	0V/5V	POW ON/OFF	40	PS	
9	PS	25	PS		41	PS	
10	0V	26	PS		42	0V	
11	0V	27	0V		43	PS	
12	0V	28	0V		44	PS	
13	0V	29	PS				
14	0V	30	PS				
15	0V	31	PS				
16	0V	32	0V				

IC402

1	PS	21	-1.2V	41	PS	61	PS
2	PS	22	3.5V	42	N.C	62	PS
3	PS	23	N.C	43	PS	63	PS
4	PS	24	-	44	PS	64	PS
5	PS	25	2V	45	PS	65	PS
6	PS	26	2V	46	PS	66	PS
7	PS	27	PS	47	PS	67	PS
8	PS	28	0V	48	PS	68	PS
9	PS	29	0V	49	PS	69	PS
10	PS	30	N.C	50	PS	70	PS
11	PS	31	N.C	51	PS	71	PS
12	PS	32	PS	52	PS	72	PS
13	PS	33	5V	53	PS	73	PS
14	PS	34	0V	54	PS	74	PS
15	PS	35	PS	55	PS	75	PS
16	PS	36	PS	56	PS	76	PS
17	PS	37	0V	57	PS	77	PS
18	PS	38	0V	58	PS	78	PS
19	PS	39	PS	59	PS	79	PS
20	PS	40	0V	60	PS	80	PS

IC403

1	0V
2	5V
3	PS

IC1502

1	1.41V
2	1.38V
3	0V
4	1.31V
5	0.02V
6	0.02V
7	0.05V
8	14.01V

IC1201

1	13.1V	9	2.9V
2	3.1V	10	-
3	4.9V	11	2.9V
4	3.1V	12	2.9V
5	2.9V	13	2.9V
6	2.9V	14	3.1V
7	2.9V	15	0.1V
8	0V	16	3.1V

IC1501

1	0V	7	13.9V	13	14V
2	0V	8	8.2V	14	14V
3	5.1V	9	N.C	15	0.2V
4	0V	10	13.9V	16	14V
5	5.1V	11	8.1V	17	13.2V
6	-	12	0V	18	5.1V

	E	C	B	MODE
Q401	5V	4.9V/0V	0.2V/5V	POW ON/OFF
Q402	0V	0V/13.9V	13.4V/0.2V	GRN/AMB
Q403	0V	0.2V/13.9V	13.6V/0.2V	GRN/AMB
Q404	0V	13.6V/0.2V	0.1V/13.8V	GRN/AMB
Q405	0V	0.2V/9.9V	13.6V/0.2V	GRN/AMB
Q406	0V	9.9V/0.2V	0.2V/9.9V	GRN/AMB
Q407	0V	13.4V/0.1V	0V/13.8V	GRN/AMB
Q1501	14V	13.9V	13.2V	
Q1502	1.4V	1.38V	0V	

	1	2	3	4	5	MODE
Q410	-	0V/13.6V	13.7V	0V/5V	0V	GRN/AMB

[Measuring Conditions]
- Power Supply Voltage : DC 14.4V
- Measuring Meter : Digital Multimeter
- Measuring Point Reference : Between Ground
- Measuring Conditions : No Signal Input
  - FM : 98.1 MHz
  - MW : 999kHz
  - LW : 216kHz
  - TAPE : Blank

○ : 7524R Model only
● : 7525R Model only
Others : Common

NOTES:
1. All resistance values are in ohms. K = 1,000
2. All capacitance values are in microfarads. $P = \frac{1}{1,000,000}$

Electrical Parts List

Resistor : Carbon resistors under 1/4 watts are not mentioned in the parts list, please confirm them by schematic diagram.

Capacitor : μF = microfarads, pF = picofarads

Abbreviations

RES. =	Resistor	CAP. =	Capacitor
C.F. =	Carbon Film	ELY. =	Electrolytic
M.F. =	Metal Film	CER. =	Ceramic
M.O. =	Metal Oxide Film	MYL. =	Mylar
M.P. =	Metal Plate	TAN. =	Tantalum
TR. =	Transistor	POLY. =	Polystyrol
TRANS. =	Transformer	PP. =	Polypropylene
CP. =	Chip	PLT. =	Polyethylene
		PF. =	Polyester Film

Main P. C. Board

IC's

	Symbol No.	Part No.	Description
	IC001	51T68999F03	BU4066BF
	IC002	51T93336F01	NJM4558M
	IC003	51T35504W02	LC7219
	IC004	51T45360W01	STK311
	IC005	51T93532F07	TC4S66F
	IC006	51T93336F01	NJM4558M
●	IC201	51T45333W01	NR9560
○	IC202	51T11210W01	CXA1102M
	IC203	51T68999F03	BU4066BF
	IC204	51T80136F04	M5238FP
	IC205	51T72016F02	LC7537AN
	IC206	51T25576W04	NJM4580E
	IC207	51T25576W04	NJM4580E
	IC208	51T25576W04	NJM4580E
	IC209	51T25576W04	NJM4580E
	IC210	51T25576W04	NJM4580E
	IC301	51T93337F01	NJM4560M
●	IC302	51T93337F01	NJM4560M
	IC303	51T25154W01	BA15532F
	IC304	51T25614W01	TA8221H
	IC305	51T25614W01	TA8221H
	IC501	51T45609W04	45609W04
	IC502	51T95014F13	S-8052HNM-CR
	IC503	51T25699W31	25699W31
	IC504	51T84723F02	LC3516AML
	IC505	51T35086W02	μPD74HC373
	IC506	51T93532F04	TC4S81F
●	IC701	51T93337F01	NJM4560M
●	IC703	51T93337F01	NJM4560M
●	IC704	51T93337F01	NJM4560M
	IC801	51T15268W03	L78LR05DFA
	IC802	51T90890F01	M5236ML
	IC804	51T93333F01	NJM2904M

Transistors

	Symbol No.	Part No.	Description
	Q001	48T62966F03	CP., DTA124
	Q002	48T62967F09	CP., DTC114TK
	Q003	48T62966F03	CP., DTA124
	Q004	48T62967F03	CP., DTC124K
	Q006	48T73888F08	CP., FMG1
	Q009	48T73888F12	CP., FMC2
	Q013	48T62967F03	CP., DTC124K
	Q014	48T73888F08	CP., FMG1
	Q016	48T62967F03	CP., DTC124K
	Q017	48T62967F03	CP., DTC124K
	Q018	48T73888F08	CP., FMG1
	Q019	48T62967F03	CP., DTC124K
	Q201	48T62967F03	CP., DTC124K
●	Q202	48T62967F03	CP., DTC124K
●	Q203	48T62967F03	CP., DTC124K
	Q204	48T73888F08	CP., FMG1
	Q205	48T63788F04	CP., 2SD1328
	Q206	48T63788F04	CP., 2SD1328
	Q207	48T63788F04	CP., 2SD1328
	Q208	48T63788F04	CP., 2SD1328
	Q301	48T63788F04	CP., 2SD1328
	Q302	48T63788F04	CP., 2SD1328
●	Q303	48T63788F04	CP., 2SD1328
●	Q304	48T63788F04	CP., 2SD1328
	Q501	48T62967F03	CP., DTC124K
	Q502	48T73888F12	CP., FMC2
	Q503	48T62967F03	CP., DTC124K
	Q504	48T62967F09	CP., DTC114TK
	Q505	48T73888F12	CP., FMC2
	Q506	48T62967F03	CP., DTC124K
	Q507	48T16335W03	CP., IMD2
	Q801	48T84366F01	2SB1243
	Q802	48T62967F03	CP., DTC124K
	Q803	48T84366F01	2SB1243
	Q804	48T62967F03	CP., DTC124K
	Q805	48T63420F01	CP., 2SA1037K
	Q806	48T62967F03	CP., DTC124K
	Q807	48T84366F01	2SB1243
	Q808	48T62967F03	CP., DTC124K
	Q809	48T62967F06	CP., DTC114YK
	Q810	48T73888F12	CP., FMC2
	Q811	48T73888F12	CP., FMC2
	Q814	48T25169W01	2SD2096
	Q817	48T73888F12	CP., FMC2
	Q818	48T69177F01	2SA1358
	Q819	48T62967F03	CP., DTC124K
	Q821	48T73888F12	CP., FMC2

Notes : ○ : For 7524R Model Only, ● : For 7525R Model Only, Others : Common.

	Symbol No.	Part No.	Description
	Q822	48T63420F01	CP., 2SA1037K
	Q823	48T63420F01	CP., 2SA1037K
	Q824	48T62967F03	CP., DTC124K
	Q825	48T93828F01	2SD1994A
	Q826	48T15289W03	2SD2008
	Q827	48T84234F03	2SB1238
	Q828	48T62967F03	CP., DTC124K
	Q829	48T84234F03	2SB1238
	Q830	48T63417F01	CP., 2SC2412K
	Q831	48T62966F04	CP., DTA144
	Q832	48T62967F04	CP., DTC144K
	Q833	48T73888F08	CP., FMG1
	Q834	48T62967F03	CP., DTC124K

Diodes

	D001	48T68828F11	1SS133
	D002	48T68828F11	1SS133
	D003	48T68828F11	1SS133
	D201	48T63462F01	CP., DAN202K
	D301	48T25664W02	RB100A
	D302	48T25664W02	RB100A
	D303	48T25664W02	RB100A
	D304	48T25664W02	RB100A
	D305	48T25664W02	RB100A
	D306	48T25664W02	RB100A
	D307	48T25664W02	RB100A
	D308	48T25664W02	RB100A
	D501	48T68828F11	1SS133
	D502	48T68828F11	1SS133
	D503	48T63462F01	CP., DAN202K
	D504	48T70933F11	1SS136
	D505	48T63462F01	CP., DAN202K
●	D701	48T64134F01	CP., DA204K
●	D702	48T64134F01	CP., DA204K
●	D703	48T64134F01	CP., DA204K
	D801	48T68580F02	DSA3A4
	D802	48T84052F11	11ES2
	D803	48T64134F01	CP., DA204K
	D805	48T68828F11	1SS133
	D806	48T68828F11	1SS133
	D807	48T64134F01	CP., DA204K
	D808	48T63462F01	CP., DAN202K
	D809	48T16617W01	ISS332
	ZD502	48T45012W36	Zener, MTZJ7.5B
	ZD801	48T45012W32	Zener, MTZJ6.8A

	Symbol No.	Part No.	Description
	ZD802	48T25766W24	Zener, HZS11A3L
	ZD803	48T25766W24	Zener, HZS9C1L
	ZD804	48T45012W20	Zener, MTZJ4.7A
	ZD807	48T25766W01	Zener, HZS6A1L
	ZD808	48T25766W24	Zener, HZS9C1L

Coil / Microphone

	L501	24T16403W19	2.2mH
●	MC701	50T35317W02	Microphone, WM-054BY

Crystals

	X001	91T25806W43	7.2MHz
	X002	91T68469F04	CER., Lock 456KHz
	X501	91T15849W02	32.768KHz
	X502	91T25806W44	7.37MHz
	X503	91T25806W17	4.19MHz

Capacitors

	C001	08S65128F69	CP.,	0.01μF
	E001	23S61523F28	ELY.,	0.47μF / 50V
	C002	08S65128F78	CP.,	0.022μF
	E002	23S61523F12	ELY.,	10μF / 16V
○	C003	08S65128F69	CP.,	0.01μF
●	C003	08S65128F71	CP.,	0.015μF
	E003	23T25149W01	ELY.,	0.1μF / 50V
○	C004	08S65128F68	CP.,	8200pF
●	C004	08S65128F67	CP.,	6800pF
	E004	23S61523F12	ELY.,	10μF / 16V
	C005	08T15399W04	CP.,	0.027μF
	C006	08T15399W04	CP.,	0.027μF
	E006	23S61523F25	ELY.,	0.1μF / 50V
	E007	23S61523F05	ELY.,	22μF / 6.3V
	C008	08S65128F35	CP.,	100pF
	E008	23S61523F05	ELY.,	22μF / 6.3V
	C010	08S65128F69	CP.,	0.01μF
	E010	23S61523F34	ELY.,	100μF / 10V
	C012	08S65128F69	CP.,	0.01μF
	E012	23T25149W14	ELY.,	0.68μF / 50V
	C013	08T90316F29	TF,	0.1μF
	C014	08T35122W15	PF.,	0.15μF

Notes : ○ : For 7524R Model Only, ● : For 7525R Model Only, Others : Common.

	Symbol No.	Part No.	Description	
	E014	23S61523F28	ELY.,	0.47μF / 50V
	C015	08S65128F69	CP.,	0.01μF
	E015	23S61523F25	ELY.,	0.1μF / 50V
	C016	08S65128F69	CP.,	0.01μF
	C019	08S65128F57	CP.,	1000pF
	C020	08S65128F69	CP.,	0.01μF
	C021	08S65128F21	CP.,	27pF
	C022	08S65128F21	CP.,	27pF
	C026	23T82372F19	ELY., (BP)	2.2μF / 50V
	C028	08S65128F69	CP.,	0.01μF
	C029	08T15399W02	CP.,	0.033μF
	C030	08T15399W02	CP.,	0.033μF
	C031	08S65128F69	CP.,	0.01μF
	C032	08S65128F69	CP.,	0.01μF
	C033	08S65128F35	CP.,	100pF
	C034	08S65128F69	CP.,	0.01μF
	C035	08S65128F69	CP.,	0.01μF
	C039	08S65128F78	CP.,	0.022μF
	C040	08S65480F31	CER.,	56pF
	E201	23T25149W05	ELY.,	1μF / 50V
	E202	23T25149W05	ELY.,	1μF / 50V
	C203	08S82122F45	CP.,	220pF
	E203	23T25149W05	ELY.,	1μF / 50V
	C204	08S82122F45	CP.,	220pF
	E204	23T25149W05	ELY.,	1μF / 50V
	C205	08T90316F09	TF,	2200pF
○	E205	23T25149W16	ELY.,	22μF / 6.3V
●	E205	23T25149W09	ELY.,	10μF / 16V
	C206	08T90316F09	TF,	2200pF
●	E206	23T25149W09	ELY.,	10μF / 16V
	C207	08T35122W14	PF.,	0.12μF
○	E207	23T25149W14	ELY.,	0.68μF / 50V
●	E207	23T25149W08	ELY.,	4.7μF / 50V
	C208	08T35122W14	PF.,	0.12μF
○	E208	23T25149W14	ELY.,	0.68μF / 50V
	C209	08T35122W14	PF.,	0.12μF
	E209	23T25149W08	ELY.,	4.7μF / 50V
	C210	08T35122W14	PF.,	0.12μF
○	E210	23T25149W13	ELY.,	100μF / 10V
	C211	08T90316F09	TF,	2200pF
	C212	08T90316F09	TF,	2200pF
	E213	23T25149W09	ELY.,	10μF / 16V
	E214	23T25149W09	ELY.,	10μF / 16V
	E215	23T25149W09	ELY.,	10μF / 16V
	E216	23T25149W09	ELY.,	10μF / 16V
	E217	23T25149W09	ELY.,	10μF / 16V
	E218	23T25149W09	ELY.,	10μF / 16V
	E219	23T25149W09	ELY.,	10μF / 16V
	E220	23T25149W05	ELY.,	1μF / 50V
	E221	23T25149W05	ELY.,	1μF / 50V
	E222	23T25149W04	ELY.,	0.47μF / 50V
	E223	23T25149W04	ELY.,	0.47μF / 50V

	Symbol No.	Part No.	Description	
	E224	23T25149W09	ELY.,	10μF / 16V
	E225	23T25149W09	ELY.,	10μF / 16V
	E226	23T25149W09	ELY.,	10μF / 16V
	E227	23T25149W09	ELY.,	10μF / 16V
	E228	23T25149W09	ELY.,	10μF / 16V
	E229	23T25149W09	ELY.,	10μF / 16V
	E230	23T25149W09	ELY.,	10μF / 16V
	E231	23T25149W15	ELY.,	4.7μF / 35V
	E232	23T25149W09	ELY.,	10μF / 16V
	E301	23T25149W05	ELY.,	1μF / 50V
	E302	23T25149W05	ELY.,	1μF / 50V
	C303	08T35122W15	PF.,	0.15μF
	E303	23T25149W09	ELY.,	10μF / 16V
	C304	08T35122W15	PF.,	0.15μF
	E304	23T25149W09	ELY.,	10μF / 16V
	C305	08T35122W15	PF.,	0.15μF
●	E305	23T25149W05	ELY.,	1μF / 50V
	C306	08T35122W15	PF.,	0.15μF
●	E306	23T25149W05	ELY.,	1μF / 50V
	C307	08T35122W15	PF.,	0.15μF
●	E307	23T25149W09	ELY.,	10μF / 16V
	C308	08T35122W15	PF.,	0.15μF
●	E308	23T25149W09	ELY.,	10μF / 16V
	C309	08T35122W15	PF.,	0.15μF
	E309	23T25149W09	ELY.,	10μF / 16V
	C310	08T35122W15	PF.,	0.15μF
	E310	23T25149W09	ELY.,	10μF / 16V
	E311	23T25149W09	ELY.,	10μF / 16V
	E312	23T25149W09	ELY.,	10μF / 16V
	E313	23T25057W14	ELY.,	1μF / 50V
	E314	23T25057W14	ELY.,	1μF / 50V
	E315	23T25057W14	ELY.,	1μF / 50V
	E316	23T25057W14	ELY.,	1μF / 50V
	E317	23T25057W05	ELY.,	10μF / 16V
	E318	23T25057W05	ELY.,	10μF / 16V
	E319	23T94181F40	ELY.,	220μF / 10V
	E320	23T25057W05	ELY.,	10μF / 16V
	E321	23T25057W05	ELY.,	10μF / 16V
	E322	23T94181F40	ELY.,	220μF / 10V
	E325	23T25149W09	ELY.,	10μF / 16V
	C501	08S65128F23	CP.,	33pF
	E501	23S61523F34	ELY.,	100μF / 10V
	C502	08S65128F21	CP.,	27pF
	E502	23S61523F29	ELY.,	1μF / 50V
	C503	08S65128F78	CP.,	0.022μF
	E503	23S61523F34	ELY.,	100μF / 10V
	C504	08S65128F21	CP.,	27pF
	E504	23S61523F34	ELY.,	100μF / 10V
	C505	08S65128F21	CP.,	27pF
	E505	23S61523F34	ELY.,	100μF / 10V
	E506	23S61523F27	ELY.,	0.33μF / 50V
	C507	08S65128F78	CP.,	0.022μF

Notes : ○ : For 7524R Model Only, ● : For 7525R Model Only, Others : Common.

	Symbol No.	Part No.	Description	
	E507	23S61523F15	ELY.,	47μF / 16V
	C508	08S65128F78	CP.,	0.022μF
	C509	08S65128F78	CP.,	0.022μF
	C510	08S65128F35	CP.,	100pF
	C511	08S65128F35	CP.,	100pF
	C512	08S65128F35	CP.,	100pF
	C513	08S65128F35	CP.,	100pF
	C514	08S65128F69	CP.,	0.01μF
	C515	08S65128F69	CP.,	0.01μF
	C516	08S65128F19	CP.,	22pF
	C517	08S65128F19	CP.,	22pF
	C518	08S65128F35	CP.,	100pF
	C520	08T74293F37	CER.,	100pF
	C521	08T74293F62	CER.,	0.022μF
	C522	08T74293F62	CER.,	0.022μF
●	E701	23S61523F30	ELY.,	2.2μF / 50V
●	C702	08S65128F61	CP.,	2200pF
●	E702	23S61523F12	ELY.,	10μF / 16V
●	C703	08S65128F69	CP.,	0.01μF
●	E703	23S61523F12	ELY.,	10μF / 16V
●	C704	08T15399W02	CP.,	0.033μF
●	E704	23S61523F29	ELY.,	1μF / 50V
●	C705	08S65128F35	CP.,	100pF
●	C706	08S65128F61	CP.,	2200pF
●	E706	23S61523F12	ELY.,	10μF / 16V
●	C707	08S65128F78	CP.,	0.022μF
●	E707	23S61523F12	ELY.,	10μF / 16V
●	C708	08S65128F69	CP.,	0.01μF
●	E708	23S61523F12	ELY.,	10μF / 16V
●	C709	08T15807W05	CP.,	0.1μF
●	E709	23S61523F12	ELY.,	10μF / 16V
●	E710	23S61523F12	ELY.,	10μF / 16V
●	E711	23S61523F34	ELY.,	100μF / 10V
●	E712	23S61523F12	ELY.,	10μF / 16V
	C801	08S53332F57	CP.,	0.1μF
	E801	23T35505W02	ELY.,	2200μF / 16V
	C802	08S53332F57	CP.,	0.1μF
	E802	23T35505W02	ELY.,	2200μF / 16V
	C803	08S65128F69	CP.,	0.01μF
	E803	23S61523F29	ELY.,	1μF / 50V
	C804	08T15399W03	CP.,	0.047μF
	C805	08S65128F78	CP.,	0.022μF
	E805	23S61523F12	ELY.,	10μF / 16V
	C806	08S65128F57	CP.,	1000pF
	E806	23T00149L36	ELY.,	100μF / 25V
	C807	08S65128F78	CP.,	0.022μF
	E807	23S61523F28	ELY.,	0.47μF / 50V
	C808	08S65128F69	CP.,	0.01μF
	E808	23S61523F12	ELY.,	10μF / 16V
	C809	08S65128F69	CP.,	0.01μF
	E810	23T35150W14	ELY.,	220μF / 25V
	E811	23S61523F29	ELY.,	1μF / 50V

	Symbol No.	Part No.	Description	
	C812	08S65128F78	CP.,	0.022μF
	E812	23S61523F12	ELY.,	10μF / 16V
	C813	08S65128F78	CP.,	0.022μF
	E813	23S61523F12	ELY.,	10μF / 16V
	C814	08S65128F49	CP.,	390pF
	E814	23S61523F34	ELY.,	100μF / 10V
	C815	08S65128F51	CP.,	470pF
	E815	23T35150W14	ELY.,	220μF / 25V
	C816	08S65128F69	CP.,	0.01μF
	E816	23S61523F12	ELY.,	10μF / 16V
	C817	08S65128F69	CP.,	0.01μF
	E817	23T94181F40	ELY.,	220μF / 10V

Resistors (All resistors are chip 1/10W ± 5% unless otherwise noted.)

	R001	06S64995F53	1K ohm
	R002	06S64995F77	10K ohm
	R003	06S64995F93	47K ohm
	R004	06S64995F93	47K ohm
○	R006	06S64995F02	100K ohm
●	R006	06S64995F97	68K ohm
	R007	06S64995F77	10K ohm
	R008	06S64995F65	3.3K ohm
	R009	06S64995F65	3.3K ohm
○	R010	06S64995F79	12K ohm
●	R010	06S64995F69	4.7K ohm
○	R011	06S64995F79	12K ohm
●	R011	06S64995F69	4.7K ohm
	R014	06S64995F77	10K ohm
	R015	06S64996F20	560K ohm
	R016	06S64995F69	4.7K ohm
	R021	06S64995F53	1K ohm
	R022	06S64995F37	220 ohm
	R023	06S64995F53	1K ohm
	R025	06T64995F61	2.2K ohm
	R026	06S64995F29	100 ohm
	R027	06S64995F76	9.1K ohm
	R028	06S64995F85	22K ohm
	R029	06S64995F53	1K ohm
	R030	06S64995F61	2.2K ohm
	R035	06S64995F53	1K ohm
	R037	06S64996F02	100K ohm
	R038	06S64995F29	100 ohm
	R039	06S64996F14	330K ohm
	R040	06S64995F77	10K ohm
	R041	06S64995F93	47K ohm
	R042	06S64995F93	47K ohm

Notes : ○ : For 7524R Model Only, ● : For 7525R Model Only, Others : Common.

	Symbol No.	Part No.	Description
	R043	06S64996F12	270K ohm
	R044	06S64995F93	47K ohm
	R045	06S64995F93	47K ohm
	R048	06S64995F71	5.6K ohm
	R049	06S64996F02	100K ohm
	R050	06S64995F61	2.2K ohm
	R052	06S64995F77	10K ohm
	R053	06S64995F77	10K ohm
	R057	06S64996F04	120K ohm
	R058	06S64995F77	10K ohm
●	R201	06S64995F37	220 ohm
●	R202	06S64995F77	10K ohm
○	R203	06S64995F85	22K ohm
○	R204	06S64995F92	43K ohm
○	R205	06S64995F69	4.7K ohm
●	R206	06S64995F79	12K ohm
●	R207	06S64995F37	220 ohm
●	R208	06S64995F79	12K ohm
●	R209	06S64995F77	10K ohm
	R210	06S64995F61	2.2K ohm
	R211	06S64995F85	22K ohm
	R212	06S64995F77	10K ohm
	R213	06S64995F77	10K ohm
	R214	06S64995F73	6.8K ohm
	R215	06S64995F73	6.8K ohm
	R216	06S64995F85	22K ohm
	R217	06S64995F85	22K ohm
	R218	06S64995F85	22K ohm
	R219	06S64995F85	22K ohm
	R220	06S64995F77	10K ohm
	R221	06S64995F77	10K ohm
	R222	06S64995F77	10K ohm
	R223	06S64995F77	10K ohm
	R224	06S64995F63	2.7K ohm
	R225	06S64995F63	2.7K ohm
	R226	06S64995F53	1K ohm
	R227	06S64996F26	1M ohm
	R228	06S64996F26	1M ohm
	R229	06S64996F26	1M ohm
	R230	06S64996F26	1M ohm
	R231	06S64996F26	1M ohm
	R232	06S64996F26	1M ohm
	R233	06S64995F77	10K ohm
	R234	06S64995F77	10K ohm
	R235	06S64995F77	10K ohm
	R236	06S64995F77	10K ohm
	R237	06S64995F93	47K ohm
	R238	06S64995F37	220 ohm
	R239	06S64995F37	220 ohm
	R240	06S64995F37	220 ohm
	R241	06S64995F37	220 ohm
	R242	06S64995F67	3.9K ohm

	Symbol No.	Part No.	Description
	R243	06S64995F67	3.9K ohm
	R244	06S64995F67	3.9K ohm
	R245	06S64995F67	3.9K ohm
	R246	06S64995F61	2.2K ohm
	R247	06S64995F61	2.2K ohm
	R248	06S64995F61	2.2K ohm
	R249	06S64995F61	2.2K ohm
	R250	06S64995F61	2.2K ohm
	R251	06S64995F61	2.2K ohm
	R252	06S64995F61	2.2K ohm
	R253	06S64995F61	2.2K ohm
○	R254	06S64995F69	4.7K ohm
	R255	06S64995F77	10K ohm
	R256	06S64995F77	10K ohm
	R257	06S64995F77	10K ohm
	R258	06S64995F77	10K ohm
	R259	06S64996F26	1M ohm
	R260	06S64996F26	1M ohm
	R261	06S64996F26	1M ohm
	R262	06S64996F26	1M ohm
	R301	06S64995F73	6.8K ohm
	R302	06S64995F73	6.8K ohm
	R303	06S64996F02	100K ohm
	R304	06S64996F02	100K ohm
	R305	06S64995F77	10K ohm
	R306	06S64995F77	10K ohm
	R307	06S64995F29	100 ohm
	R308	06S64995F29	100 ohm
	R309	06S64995F85	22K ohm
	R310	06S64995F85	22K ohm
	R311	06S64995F29	100 ohm
	R312	06S64995F29	100 ohm
●	R313	06S64995F73	6.8K ohm
●	R314	06S64995F73	6.8K ohm
●	R315	06S64996F02	100K ohm
●	R316	06S64996F02	100K ohm
●	R317	06S64995F77	10K ohm
●	R318	06S64995F77	10K ohm
●	R319	06S64995F29	100 ohm
●	R320	06S64995F29	100 ohm
●	R321	06S64995F85	22K ohm
●	R322	06S64995F85	22K ohm
●	R323	06S64995F29	100 ohm
●	R324	06S64995F29	100 ohm
	R325	06S64995F45	470 ohm
	R326	06S64995F45	470 ohm
	R327	06S64995F45	470 ohm
	R328	06S64995F45	470 ohm
	R329	06S53331F40	2.2 ohm 1/8W
	R330	06S53331F40	2.2 ohm 1/8W
	R331	06S53331F40	2.2 ohm 1/8W
	R332	06S53331F40	2.2 ohm 1/8W

Notes : ○ : For 7524R Model Only, ● : For 7525R Model Only, Others : Common.

	Symbol No.	Part No.	Description
	R333	06S53331F40	2.2 ohm 1/8W
	R334	06S53331F40	2.2 ohm 1/8W
	R335	06S53331F40	2.2 ohm 1/8W
	R336	06S53331F40	2.2 ohm 1/8W
	R337	06S64995F85	22K ohm
	R338	06S64995F85	22K ohm
	R339	06S64995F85	22K ohm
	R340	06S64995F85	22K ohm
	R341	06S64995F85	22K ohm
	R342	06S64995F85	22K ohm
	R343	06S64995F85	22K ohm
	R344	06S64995F85	22K ohm
	R345	06S64995F77	10K ohm
	R346	06S64995F77	10K ohm
●	R347	06S64995F77	10K ohm
●	R348	06S64995F77	10K ohm
	R501	06S64995F41	330 ohm
	R502	06S64995F93	47K ohm
	R503	06S64995F93	47K ohm
	R504	06S64995F93	47K ohm
	R505	06S64995F69	4.7K ohm
	R506	06S64995F93	47K ohm
	R507	06S64995F93	47K ohm
	R508	06S64995F93	47K ohm
	R509	06S64995F89	33K ohm
	R510	06S64995F61	2.2K ohm
	R511	06S64995F61	2.2K ohm
	R512	06S64995F61	2.2K ohm
	R513	06S64995F61	2.2K ohm
	R514	06S64995F93	47K ohm
	R515	06S64995F93	47K ohm
	R516	06S64995F93	47K ohm
	R517	06S64995F77	10K ohm
	R518	06S64996F12	270K ohm
	R519	06S64996F12	270K ohm
	R520	06S64995F71	5.6K ohm
	R521	06S64995F93	47K ohm
	R522	06S64995F93	47K ohm
	R523	06S64995F53	1K ohm
	R524	06S64996F02	100K ohm
	R526	06S64995F93	47K ohm
	R527	06S64995F93	47K ohm
	R528	06S64995F93	47K ohm
	R529	06S64996F02	100K ohm
	R531	06S64996F14	330K ohm
	R536	06S64995F77	10K ohm
	R537	06S64995F77	10K ohm
	R539	06S64995F77	10K ohm
	R541	06S64995F93	47K ohm
	R542	06S64995F53	1K ohm
	R543	06S64995F53	1K ohm
	R544	06S64995F53	1K ohm

	Symbol No.	Part No.	Description
	R545	06S64995F53	1K ohm
	R546	06S64995F53	1K ohm
	R547	06S64995F53	1K ohm
	R548	06S64995F53	1K ohm
	R549	06S64995F93	47K ohm
	R550	06S64995F93	47K ohm
	R551	06S64995F93	47K ohm
	R552	06S64995F93	47K ohm
	R553	06S64995F93	47K ohm
	R555	06S64995F93	47K ohm
	R554	06S64995F93	47K ohm
	R557	06S64995F53	1K ohm
	R558	06S64995F53	1K ohm
	R560	06S64995F89	33K ohm
●	R701	06S64995F56	1.3K ohm
●	R704	06S64996F18	470K ohm
●	R705	06S64995F61	2.2K ohm
●	R706	06S64996F02	100K ohm
●	R707	06S64996F14	330K ohm
●	R710	06S64995F53	1K ohm
	R711	06S64996F02	100K ohm
●	R714	06S64995F29	100 ohm
●	R715	06S64995F29	100 ohm
●	R716	06S64995F29	100 ohm
●	R717	06S64996F02	100K ohm
●	R718	06S64995F67	3.9K ohm
●	R719	06S64996F18	470K ohm
●	R720	06S64995F69	4.7K ohm
●	R721	06S64995F77	10K ohm
●	R722	06S64995F93	47K ohm
●	R723	06S64996F02	100K ohm
●	R724	06S64995F53	1K ohm
	R725	06S64996F02	100K ohm
●	R726	06S64995F69	4.7K ohm
●	R727	06S64995F77	10K ohm
●	R728	06S64996F02	100K ohm
●	R729	06S64995F93	47K ohm
●	R730	06S64995F53	1K ohm
	R731	06S64996F02	100K ohm
●	R732	06S64995F89	33K ohm
●	R733	06S64995F81	15K ohm
	R801	06S53330F65	3.3K ohm 1/8W
	R802	06S53330F69	4.7K ohm 1/8W
	R803	06S64995F69	4.7K ohm
	R805	06S53330F61	2.2K ohm 1/8W
	R806	06S64995F77	10K ohm
	R807	06S53330F77	10K ohm 1/8W
	R808	06S53330F61	2.2K ohm 1/8W
	R809	06S64995F77	10K ohm
	R810	06T70072F03	6.8 ohm 1/4W
	R811	06T70072F03	6.8 ohm 1/4W
	R812	06S64995F77	10K ohm

Notes : ○ : For 7524R Model Only, ● : For 7525R Model Only, Others : Common.

Symbol No.	Part No.	Description
R813	06S64995F77	10K ohm
R814	06S53330F61	2.2K ohm 1/8W
R815	06S64995F77	10K ohm
R816	06S53330F77	10K ohm 1/8W
R817	06T70072F38	240 ohm 1/4W
R818	06T70072F38	240 ohm 1/4W
R819	06S64995F87	27K ohm
R820	06S64995F68	4.3K ohm
R821	06S64995F81	15K ohm
R822	06T70072F37	220 ohm 1/4W
R823	06S64995F77	10K ohm
R824	06T70072F45	470 ohm 1/4W
R827	06T70072F45	470 ohm 1/4W
R828	06S64995F77	10K ohm
R829	06S64995F77	10K ohm
R830	06S64996F02	100K ohm
R834	06T70072F53	1K ohm 1/4W
R835	06S64995F77	10K ohm
R836	06S64995F77	10K ohm
R837	06S64995F65	3.3K ohm
R838	06S64996F02	100K ohm
R839	06S64996F02	100K ohm
R840	06S64995F61	2.2K ohm
R841	06S64995F93	47K ohm
R842	06S64995F85	22K ohm
R843	06S64995F85	22K ohm
R847	06T70072F53	1K ohm 1/4W
R848	06S64995F69	4.7K ohm
R849	06S64995F77	10K ohm
R850	06T70072F53	1K ohm 1/4W
R851	06T70072F53	1K ohm 1/4W
R852	06S64995F77	10K ohm
R853	06S53330F61	2.2K ohm 1/8W
R854	06S64995F65	3.3K ohm
R855	06S64995F65	3.3K ohm
R856	06S53330F85	22K ohm 1/8W
R857	06S64995F77	10K ohm
R858	06S64995F83	18K ohm
R859	06S64995F85	22K ohm
R860	06S64995F85	22K ohm
R861	06T70072F03	6.8 ohm 1/4W
R870	06S64995F77	10K ohm
R871	06S64995F61	2.2K ohm
VR201	18T15355W13	Variable, 10Kohm
VR202	18T15355W13	Variable, 10Kohm

Symbol No.	Part No.	Description
Front P. C. Board (1)		
IC's		
IC401	51T16615W29	16615W29
IC402	51T35265W01	μPD7229AGF
IC403	51T83524F01	BX1408
Transistors		
Q401	48T62966F03	CP., DTA124
Q402	48T94853F08	CP., DTD143TK
Q403	48T94853F08	CP., DTD143TK
Q404	48T94853F08	CP., DTD143TK
Q405	48T94853F08	CP., DTD143TK
Q406	48T94853F08	CP., DTD143TK
Q407	48T94853F08	CP., DTD143TK
Q410	48T73888F12	CP., FMC2
Diodes		
D401	48T94471F01	IMN10
D402	48T94471F01	IMN10
Lamps		
PL401	65T45353W01	6V-70mA
PL402	65T45353W02	6V-70mA
PL403	65T45353W02	6V-70mA
PL405	65T45353W02	6V-70mA
PL406	65T45353W02	6V-70mA
PL407	65T45353W01	6V-70mA
PL409	65T45353W01	6V-70mA
PL410	65T45353W01	6V-70mA
PL414	65T45587W02	9V-75mA
PL415	65T45587W02	9V-75mA
PL416	65T45587W01	9V-75mA
PL417	65T45587W01	9V-75mA

	Symbol No.	Part No.	Description
	Thermistor / Crystal		
	TH401	48T93439F03	Thermistor, 10K ohm
	X401	91T67096F01	4.5MHz
	Switches		
○	S401	40T35140W22	SKQDAB7397J (PWR)
●	S401	40T35140W22	SKQDAB7397J (PWR / A. S. U.)
●	S402	40T35140W22	SKQDAB7397J (MUTE)
	S403	40T35140W22	SKQDAB7397J (A. P. I.)
○	S404	40T35140W22	SKQDAB7397J (1 / ⧗ B)
●	S404	40T35140W22	SKQDAB7397J (1 / ⧗ B. C)
	S405	40T35140W22	SKQDAB7397J (2 / PS. DN)
	S406	40T35140W22	SKQDAB7397J (3 / PS. UP)
●	S407	40T35140W22	SKQDAB7397J (A. S. C.)
●	S408	40T35140W22	SKQDAB7397J (P. T.)
	S409	40T35140W22	SKQDAB7397J (▲)
	S410	40T35140W22	SKQDAB7397J (4 / B. SKIP)
	S411	40T35140W22	SKQDAB7397J (5 / R. EJECT)
	S412	40T35140W22	SKQDAB7397J (6 / PROG)
	S413	40T35140W22	SKQDAB7397J (UP ⏭ / FF)
	S414	40T35140W22	SKQDAB7397J (D. A. P. / MIX)
○	S415	40T35140W22	SKQDAB7397J (P. T. / SCAN)
●	S415	40T35140W22	SKQDAB7397J (MONO / SCAN)
	S416	40T35140W22	SKQDAB7397J (DX / RPT)
	S417	40T35140W22	SKQDAB7397J (DN ⏮ / REW)
	S418	40T35140W22	SKQDAB7397J (DISP)
	S419	40T35140W22	SKQDAB7397J (CLOCK)
	S420	40T35140W22	SKQDAB7397J (T. INFO / A. ME)
	S425	40T35140W22	SKQDAB7397J (RESET)
	Coil		
	L401	24T16403W19	2.2μH

Symbol No.	Part No.	Description
Capacitors		
C401	08T15399W01	CP., 0.022μF
E401	23T25191W07	ELY., 22μF / 6.3V
C402	08S65128F19	CP., 22pF
E402	23T25191W07	ELY., 22μF / 6.3V
C403	08S65128F19	CP., 22pF
C404	08T15399W03	CP., 0.047μF
C405	08S65128F69	CP., 0.01μF
C406	08S65128F69	CP., 0.01μF
C407	08S65128F69	CP., 0.01μF
C408	08S65128F69	CP., 0.01μF
Resistors (All resistors are chip 1/10W ± 5% unless otherwise noted.)		
R401	06S64995F93	47K ohm
R402	06S64995F93	47K ohm
R403	06S64995F93	47K ohm
R404	06S64995F93	47K ohm
R405	06S64995F77	10K ohm
R406	06S64995F77	10K ohm
R407	06S64995F77	10K ohm
R408	06S64995F77	10K ohm
R409	06S64995F77	10K ohm
R415	06T70072F21	47 ohm 1/4W
R416	06T70072F21	47 ohm 1/4W
R417	06T70072F21	47 ohm 1/4W
R418	06T70072F21	47 ohm 1/4W
R419	06T70072F05	10 ohm 1/4W
R421	06T70072F05	10 ohm 1/4W
R423	06T70072F17	33 ohm 1/4W
R425	06T70072F17	33 ohm 1/4W
R433	06S64995F53	1K ohm
R434	06S64995F53	1K ohm
R435	06S64995F53	1K ohm
R436	06S64995F53	1K ohm
R437	06S64995F53	1K ohm
R442	06S64995F53	1K ohm
R443	06S64995F71	5.6K ohm
R444	06S64995F71	5.6K ohm
R445	06S64995F93	47K ohm
R446	06S64995F93	47K ohm
R447	06S64995F53	1K ohm
VR401	18T45332W01	Volume, 2.2K ohm (VOL. UP / DOWN)

Notes : ○ : For 7524R Model Only, ● : For 7525R Model Only, Others : Common.

Symbol No.	Part No.	Description
Front P. C. Board (2)		
Lamps		
PL411	65T45353W01	6V-70mA
PL412	65T45353W02	6V-70mA
PL413	65T45353W02	6V-70mA
Switches		
S421	40T35140W22	SKQDAB7397J (TAPE ▶ / ‖)
S422	40T35140W22	SKQDAB7397J (MODE / LOUD)
S423	40T35140W22	SKQDAB7397J (DISC ▶ / ‖)
S424	40T35140W22	SKQDAB7397J (TUNER / BAND)
Resistors (All resistors are chip 1/4W ± 5% unless otherwise noted.)		
R410	06T70072F21	47 ohm
R411	06T70072F21	47 ohm
R413	06T70072F21	47 ohm
R414	06T70072F21	47 ohm
GR Control P. C. Board		
IC's / Transistors		
IC1501	51T25621W01	IC, AN6275K
IC1502	51T67915F01	IC, M51143AL
Q1501	48T84366F05	2SB1243
Q1502	48T94606F12	CP., DTC144TU

Symbol No.	Part No.	Description
Capacitors		
E1501	23S61524F32	ELY., 1μF / 50V
C1502	08T35374W01	CP., 0.1μF
C1503	08T35374W01	CP., 0.1μF
C1504	08T35374W01	CP., 0.1μF
C1505	08S65128F15	CP., 15pF
Resistors (All resistors are chip 1/10W ± 5% unless otherwise noted.)		
R1501	06S64995F77	10K ohm
R1502	06S64995F77	10K ohm
R1503	06S64996F10	220K ohm
R1504	06S64996F26	1M ohm
R1505	06S64996F18	470K ohm
R1506	06S64996F01	91K ohm
GR Audio P. C. Board		
IC / Diode		
IC1201	51T15146W01	IC, TA7705P
D1201	48T44813F01	MA165TA
Capacitors		
E1201	23T25149W09	ELY., 10μF / 16V
C1202	08T35389W07	TF, 330pF
E1202	23T25149W13	ELY., 100μF / 10V
C1203	08T35389W07	TF, 330pF
E1203	23T25149W13	ELY., 100μF / 10V
C1204	08T35389W07	TF, 330pF
E1204	23T25149W12	ELY., 47μF / 16V
C1205	08T35389W07	TF, 330pF
E1205	23T25149W15	ELY., 4.7μF / 35V
E1206	23T25149W15	ELY., 4.7μF / 35V
C1208	08T35122W02	TF, 0.012μF
C1209	08T35122W02	TF, 0.012μF

	Symbol No.	Part No.	Description
	Resistors (All resistors are chip 1/10W ± 5% unless otherwise noted.)		
	R1201	06S53330F29	100 ohm 1/8W
	R1202	06S53330F32	130 ohm 1/8W
	R1203	06S53330F32	130 ohm 1/8W
	R1204	06S64996F14	330K ohm
	R1205	06S64996F14	330K ohm
	R1208	06S64995F78	11K ohm
	R1209	06S64995F78	11K ohm
	R1210	06S64995F81	15K ohm
	R1211	06S64995F81	15K ohm
	R1212	06S64995F65	3.3K ohm
	R1213	06S53330F65	3.3K ohm 1/8W
	R1214	06S53330F85	22K ohm 1/8W
	R1215	06S64995F85	22K ohm
	Miscellaneous		
	CB401	09T45337W01	17P Connector
	CH401	09T45338W01	17P Connector
	ET801	01T16621W08	DIN Connector
○	ET802	01T15690W03	RCA Output Connector
●	ET802	01T15690W02	RCA Output Connector
	ET803	01T15513W04	Antenna Receptacle
	ET804	09T13515W16	Power Supply & SP Output Connector (Socket)
	HD1101	88T35406W01	Head
	LCD401	65T45614W01	LCD Display
	M1501	01V41100W72	Assy., Main Motor (11.5V-85mA)
	PT1501	51T15144W01	Sensor, Photo
	S1501	40T15222W01	Switch, Detector (PACK IN)
	S1502	40T15382W01	Switch, Detector (PACK DOWN)
	S1503	40T15382W01	Switch, Detector (METAL)
	SD1501	01T10369W02	Assy., Eject Solenoid
	SD1502	01T15249W01	Assy., Play Solenoid
	SD1503	01T10371W01	Assy., RF Solenoid

Symbol No.	Part No.	Description

Notes : ○ : For 7524R Model Only, ● : For 7525R Model Only, Others : Common.

Exploded View (Nose Unit)

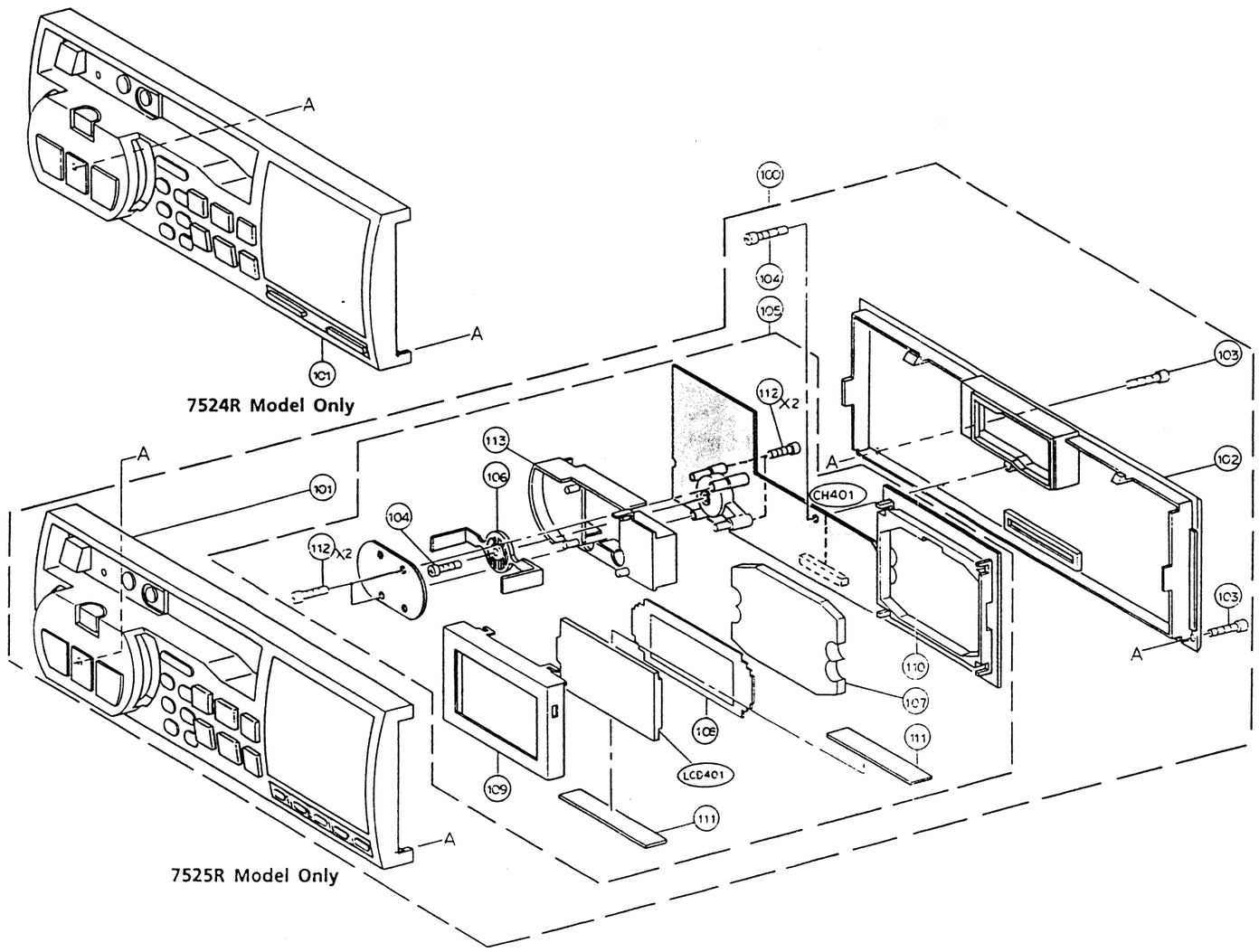

Cabinet Assembly Parts List (Nose Unit)

Notes : ● The parts without parts list are not supplied.
● Parts marked * will need a long delivery time, or may be not supplied in some cases.

Symbol No.		Index	Part No.	Description
○	100	2-D	01V44100W95	Assy., Nose Unit
●	100	2-D	01V43800W97	Assy., Nose Unit
○	101	3-B	13D41465W04	Assy., Nosepiece
●	101	3-B	13D40945W04	Assy., Nosepiece
	102	3-E	13D41072W01	Nose, Bottom
	103		03S68555F19	Screw, Pan (M2×12)
	104		03S70494F15	Screw, Pan (M2×4)
○	*105	3-D	01V44100W96	Assy., Front P.C.Board
●	*105	3-D	01V43800W98	Assy., Front P.C.Board
	106	3-C	36A41001W01	Knob, Shuttle
	107	4-D	61A40963W01	Lens, LCD
	108	4-C	26A40964W01	Sheet, LCD
	109	4-C	15A40965W01	Cover, LCD
	110	4-D	15B40966W01	Case, LCD
	111		75T35021W03	Rubber, Electric
	112		03S68555F02	Screw, Pan (M2×5.5)
	113	3-C	43C41830W01	Spacer, Volume

Notes : ○ : For 7524R Model Only,
● : For 7525R Model Only, Others : Common.

Exploded View (Main Unit)

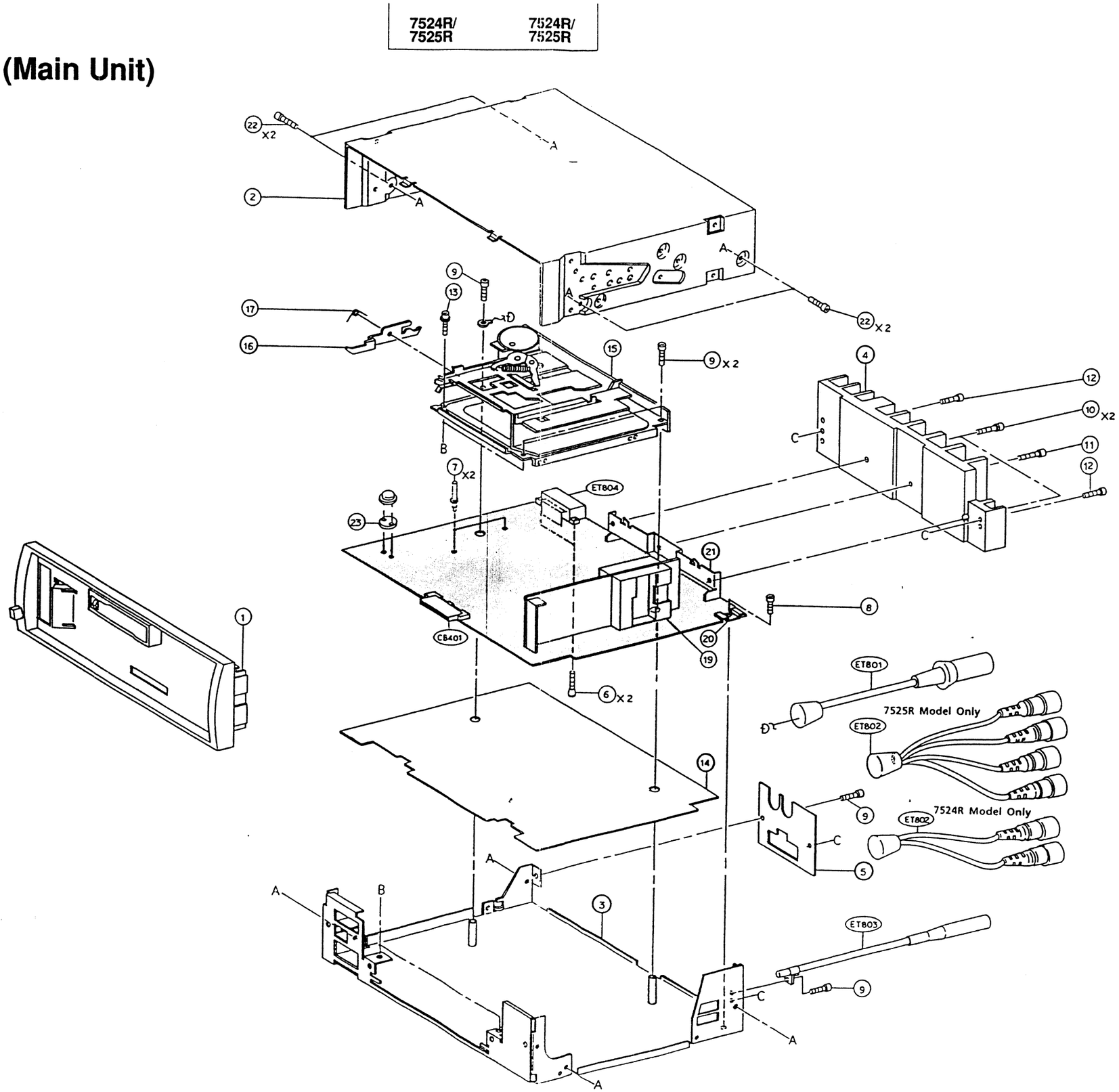

Cabinet Assembly Parts List (Main Unit)

Notes :
- The parts without parts list are not supplied.
- Parts marked * will need a long delivery time, or may be not supplied in some cases.

Symbol No.	Index	Part No.	Description
1	3-C	13C41311W01	Assy., Front Escutcheon
2	1-C	15D41006W01	Cover, Top
6	3-E	03S68555F22	Screw, Countersink (M3×8)
7	3-D	09T84840F01	Lug, Style 18mm
8	3-F	03S44205G42	Screw, Pan (M2.6×4)
9		03S44205G07	Screw, Pan (M2.6×5)
10	2-G	03S40014G63	Screw, W/Washer (M2.6×16)
11	2-G	03S40014G08	Screw, W/Washer (M2.6×8)
12		03S44205G61	Screw, Pan (M2.6×10)
13	2-D	03S71677F06	Screw, Flange (M2.6×6)
*15	2-E	81D40887W01	Cassette Deck, GR75H130
17	2-C	41A20424W01	Spring, Door
19	3-E	77C41467W01	FM/MW/LW Tuner, MB4R1010 (FE001)
20	3-E	07A20812W02	Bracket, P.C.Board
22		03S44205G34	Screw, Pan (M2.6×5)
23	3-C	43A42110W01	Spacer, MIC

Symbol No.	Index	Part No.	Description

Semi - Conductor Lead Identifications

BU4066BF : IC001, 203

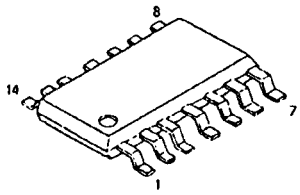

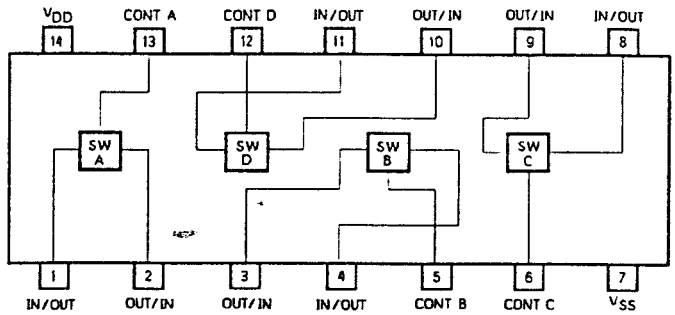

NJM4558M : IC002, 006
NJM4580E : IC206~210
NJM4560M : IC301,
●IC302, 701, 703, 704
NJM2904M : IC804

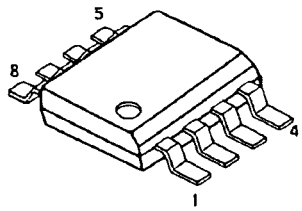

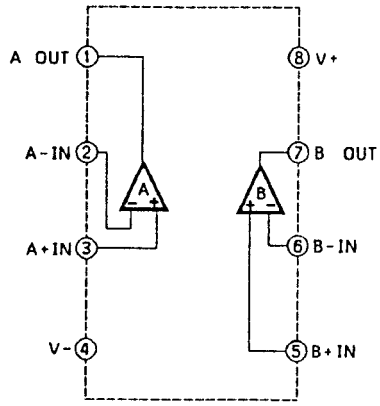

LC7219 : IC003

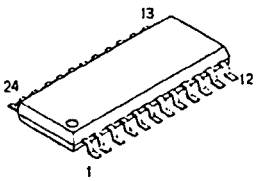

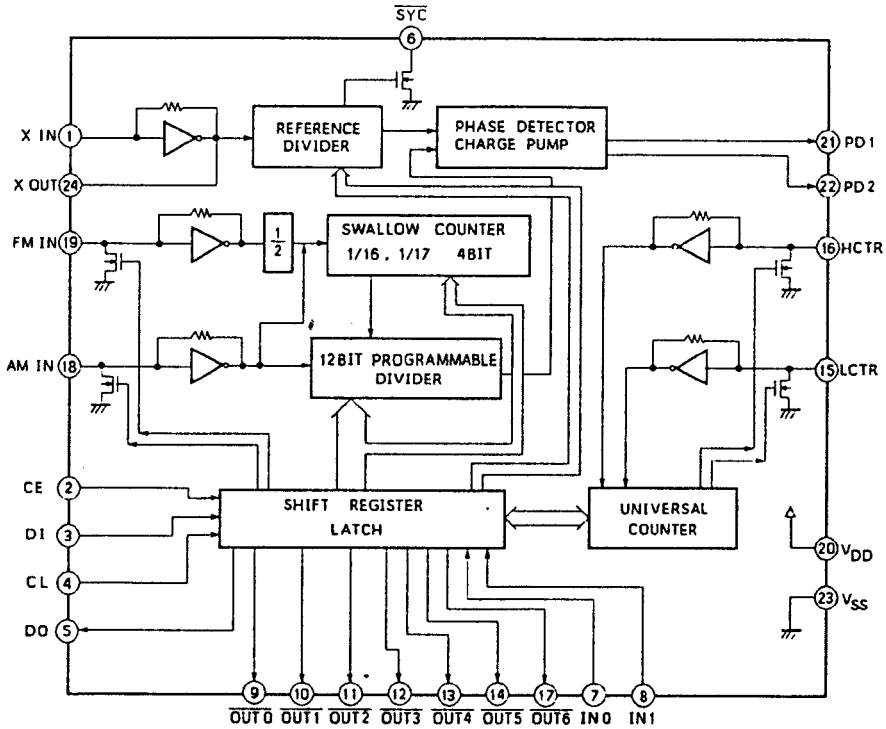

Notes : ○ : For 7524R Model Only, ● : For 7525R Model Only, Others : Common.

STK311 : IC004

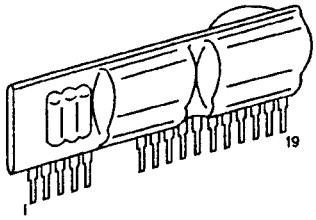

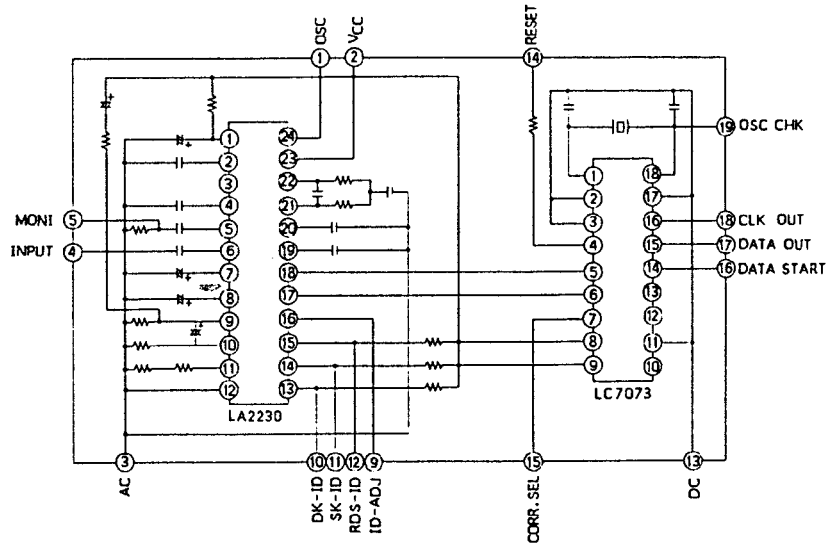

TC4S66F : IC005

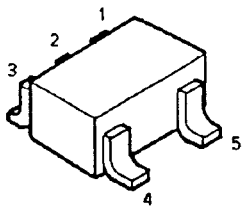

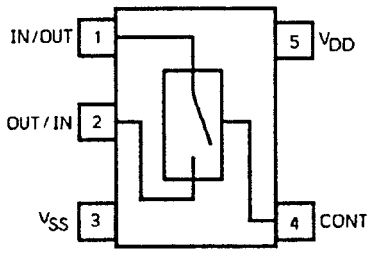

●**NR9560** : IC201

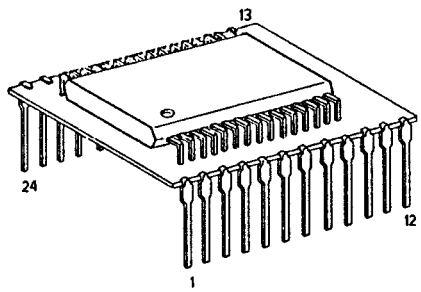

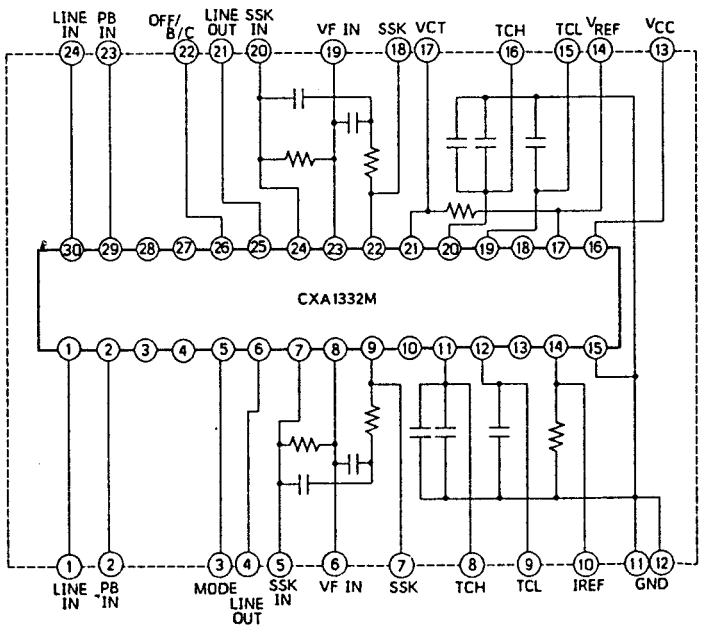

Notes : ○ : For 7524R Model Only, ● : For 7525R Model Only, Others : Common.

○CXA1102M : IC202

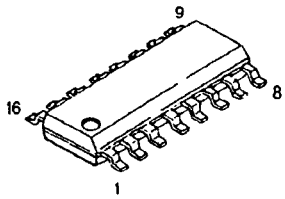

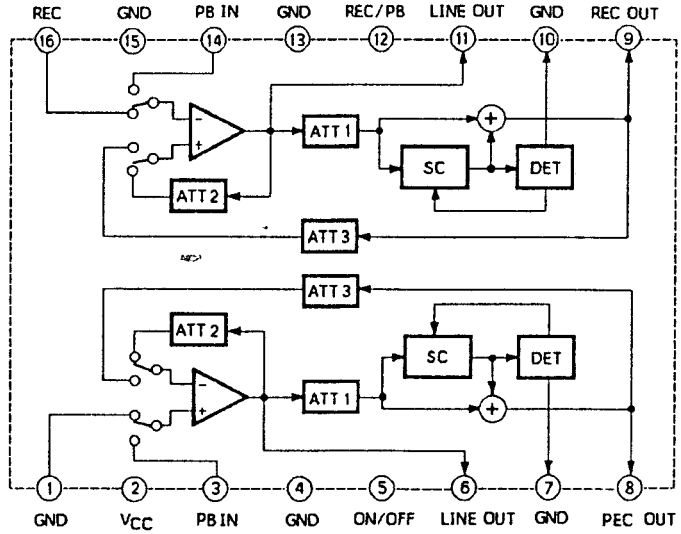

M5238FP : IC204

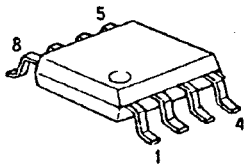

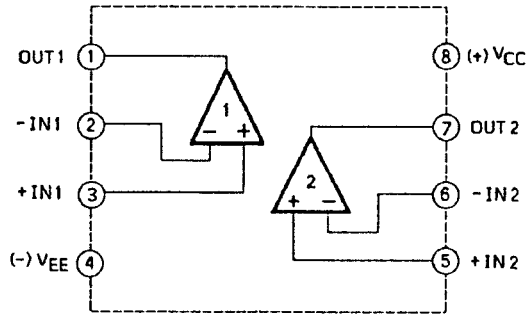

LC7537AN : IC205

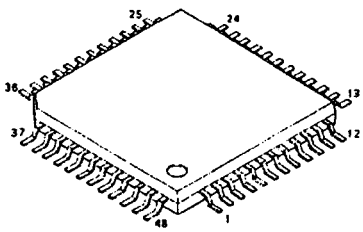

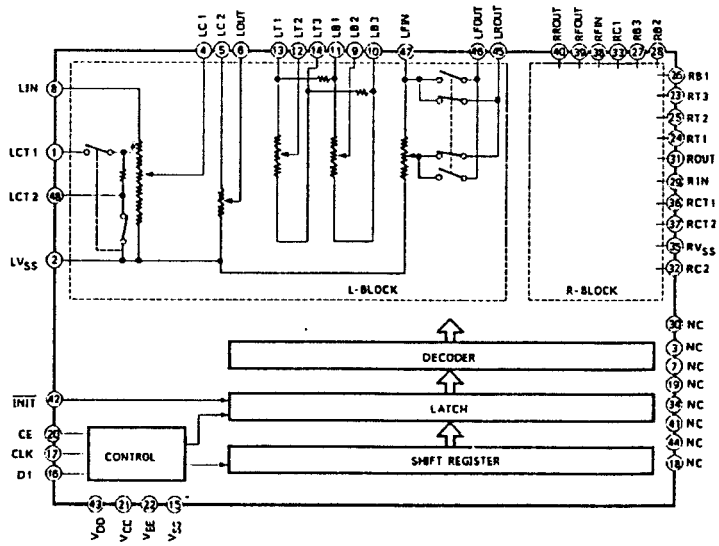

Notes : ○ : For 7524R Model Only, ● : For 7525R Model Only, Others : Common.

BA15532F : IC303

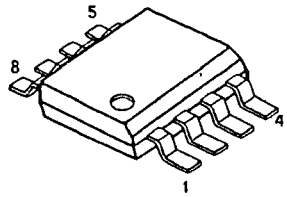

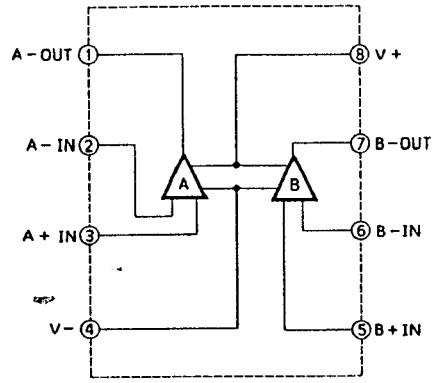

TA8221H : IC304, 305

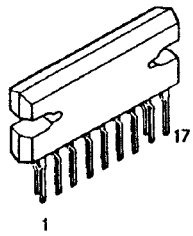

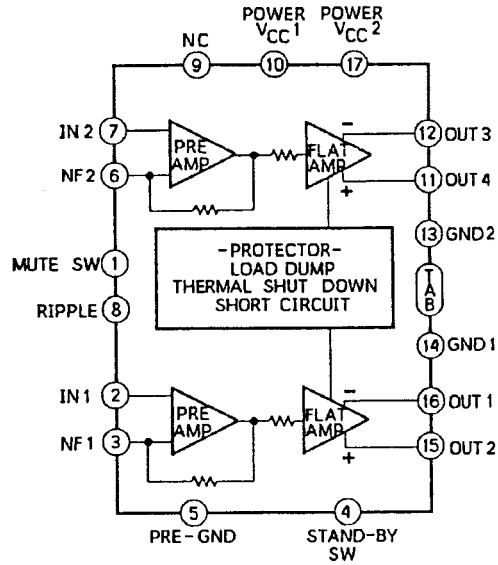

16615W29 : IC401

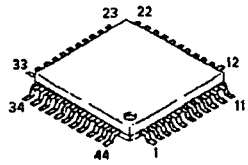

PIN NO.	CORD ADDRESS	I/O	PIN NO.	CORD ADDRESS	I/O
1	KEY R1	I	23	$\overline{\text{WHT/ORG}}$	O
2	KEY R2	I	24	$\overline{\text{PWR-ON}}$	O
3	KEY R3	I	25	DATA	O
4	KEY S0	O	26	$\overline{\text{CS}}$	O
5	KEY S1	O	27	GND	—
6	KEY S2	O	28	GND	—
7	KEY S3	O	29	DISP DATA	I
8	KEY S4	O	30	KEY DATA	O
9	KEY S5	O	31	$\overline{\text{DISP CLK}}$	I
10	GND	—	32	GND	—
11	GND	—	33	$\overline{\text{BUSY}}$	I
12	GND	—	34	NC	—
13	GND	O	35	CE	I
14	GND	O	36	DISP REQ	I
15	GND	O	37	REMOCON	I
16	GND	O	38	V_{DD}	—
17	V_{SS}	—	39	V_{DD}	—
18	GND	—	40	C/$\overline{\text{D}}$	O
19	GND	—	41	CLK	O
20	RESET	I	42	RESET	O
21	X2	—	43	$\overline{\text{SCK}}$	—
22	X3	—	44	KEY R0	I

µPD7229AGF : IC402

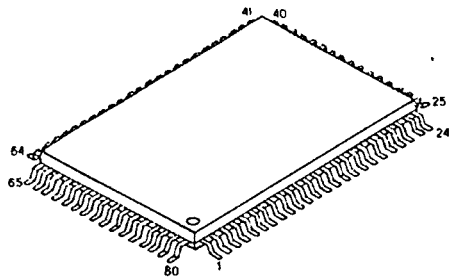

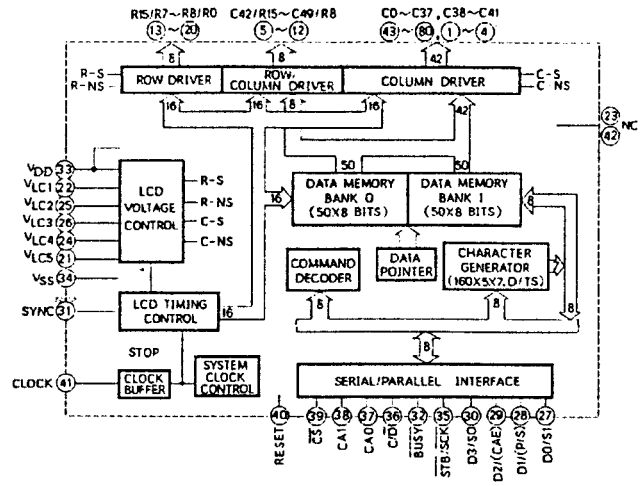

BX1408 : IC403

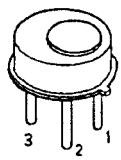

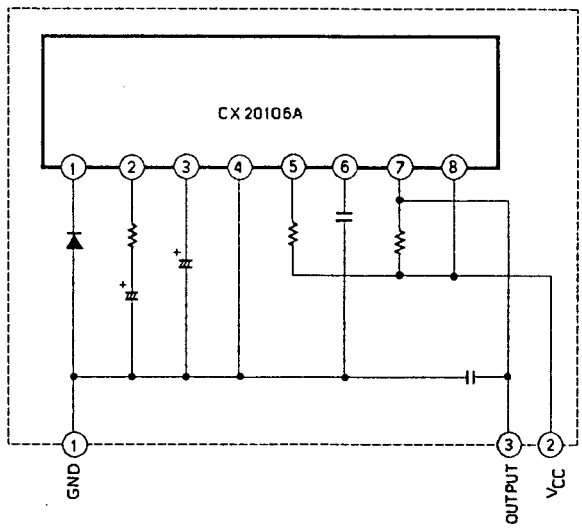

45609W04 : IC501

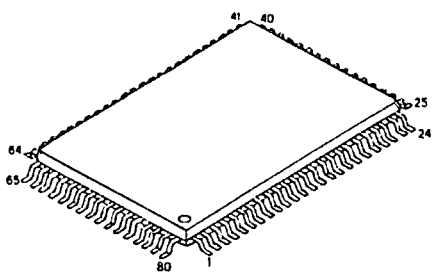

PIN NO.	CODE ADDRESS	I/O	PIN NO.	CODE ADDRESS	I/O	PIN NO.	CODE ADDRESS	I/O	PIN NO.	CODE ADDRESS	I/O
1	LPF	I	23	PWR CONT	I/O	45	TP ALM ON	I/O	67	GND	—
2	GND	—	24	$\overline{\text{MUTE}}$	I/O	46	$\overline{\text{DTS MUTE}}$	I	68	GND	—
3	V_{DD}	—	25	OUT-REM	I/O	47	ACC +5	I	69	GND	—
4	V_{DD}	—	26	OUT-INT	I/O	48	CHGR D IN	I	70	GND	—
5	GND	I/O	27	$\overline{\text{IN PAU}}$	I/O	49	GND	—	71	GND	—
6	PLY SOL	I/O	28	$\overline{\text{IN-INT}}$	I/O	50	DTS STS	I/O	72	$\overline{\text{DISP-RESET}}$	—
7	RF SOL	I/O	29	CHGR D OUT	I/O	51	DTS CMD	I/O	73	GND	—
8	EJ SOL	I/O	30	EV CLK	I/O	52	$\overline{\text{DTS SCK}}$	I/O	74	$\overline{\text{NOSE ON}}$	I
9	MOTOR CONT	—	31	EV DATA	I/O	53	BAT+5	I	75	SELF VR	I
10	O.MOTER	I/O	32	EV CE	I/O	54	GND	—	76	PK ON SW	I
11	F/R	I/O	33	GND	—	55	X1	—	77	RUN DET	I
12	L.D.FAST	I/O	34	CHGR ON	I/O	56	X2	—	78	GND	—
13	PK IN SW	I/O	35	TAPE/$\overline{\text{RADIO}}$	I/O	57	GND	—	79	HPF	I
14	METAL	I/O	36	$\overline{\text{DOLBY C}}$	I/O	58	X3	I	80	MPF	I
15	$\overline{\text{MS DET}}$	I/O	37	$\overline{\text{DOLBY B}}$	I/O	59	X4	I			
16	GND	—	38	CE OUT	I/O	60	$\overline{\text{RESET}}$	I			
17	GND	—	39	DTS STRT	I/O	61	DTS STNBY	—			
18	7525/$\overline{7524}$	I	40	DISP CE	I/O	62	GND	—			
19	GND	—	41	KEY DATA	I/O	63	GND	—			
20	TP ALM	I/O	42	DISP REQ	I/O	64	GND	—			
21	NOSE PWR	I/O	43	$\overline{\text{DISP CLK}}$	I/O	65	GND	—			
22	POW IC ON	I/O	44	DISP DATA	I/O	66	GND	—			

S - 8052HNM - CR : IC502

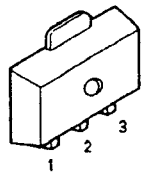

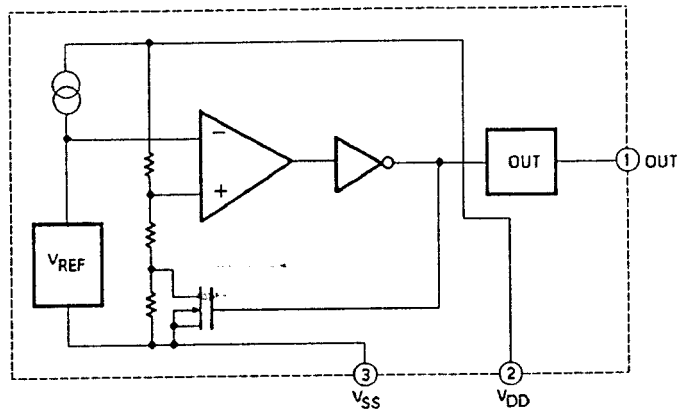

25699W31 : IC503

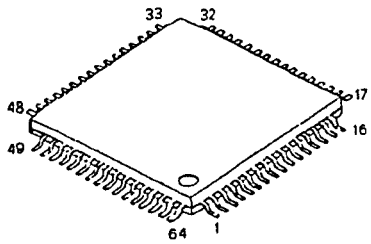

PIN NO.	CORD ADDRESS	I/O	PIN NO.	CORD ADDRESS	I/O	PIN NO.	CORD ADDRESS	I/O
1	CE 1	O	23	AD 2	I/O	45	$\overline{SK}$	I
2	NC	—	24	GND	—	46	SEARCH	I
3	$\overline{DTS\ MUTE}$	O	25	AD 1	I/O	47	MALTI PATH	I
4	$\overline{7071\ RESET}$	O	26	AD0	I/O	48	$\overline{ADJON}$	I
5	50K REF	O	27	LE	O	49	S·METER	I
6	$\overline{RESET}$	I	28	DTS STB	I	50	$\overline{DK}$	I
7	X2	O	29	RDS CLK	I	51	$\overline{RDS}$	I
8	X1	I	30	D. START	I	52	CLK	O
9	V_{SS}	—	31	DATA	I	53	DATA OUT	O
10	CE2-1	O	32	DATA IN	I	54	$\overline{LPF\ SW}$	O
11	CE2-2	O	33	AUDIO IN	I	55	$\overline{IF\ MUTE}$	O
12	NC	—	34	DTS-START	I	56	CE	—
13	NC	—	35	DTS-CMD	I	57	NC	—
14	NC	—	36	NC	—	58	LW	O
15	A10	O	37	NC	—	59	FM/$\overline{AM}$	O
16	A9	O	38	DTS-CLK	I	60	L/$\overline{D}$	O
17	A8	O	39	DTS-STS	O	61	MONO	O
18	AD7	I/O	40	CA	I	62	CE	I
19	AD6	I/O	41	V_{DD}	—	63	SD	I
20	AD5	I/O	42	A.V_{SS}	—	64	$\overline{WR}$	O
21	AD4	I/O	43	A.V_{REF}	I			
22	AD3	I/O	44	$\overline{ST}$	I			

LC3516AML : IC504

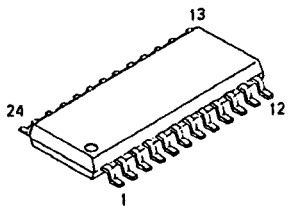

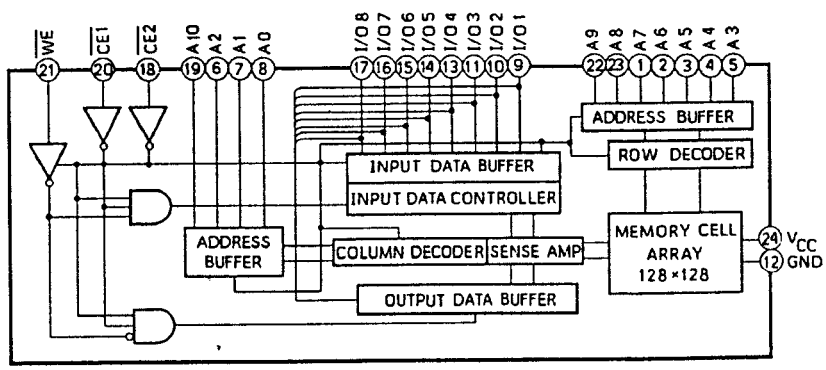

μPD74HC373 : IC505

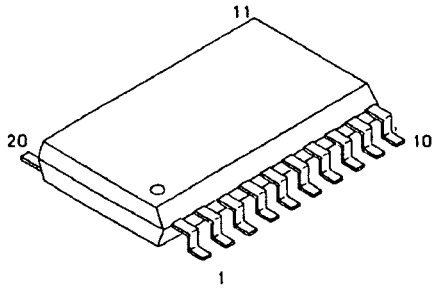

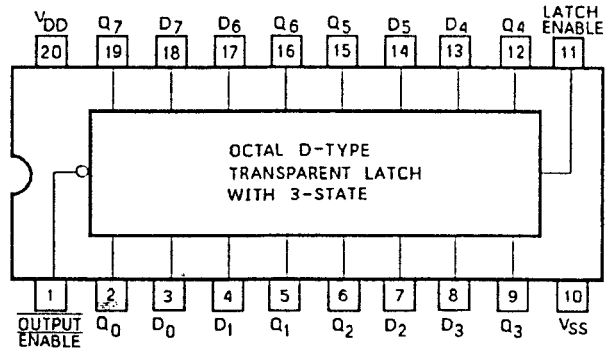

TC4S81F : IC506

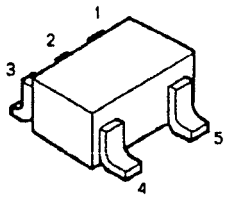

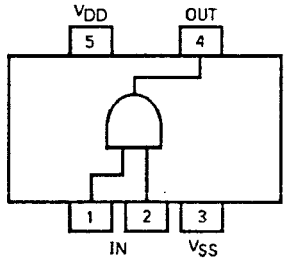

L78LR05DFA : IC801

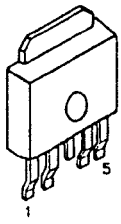

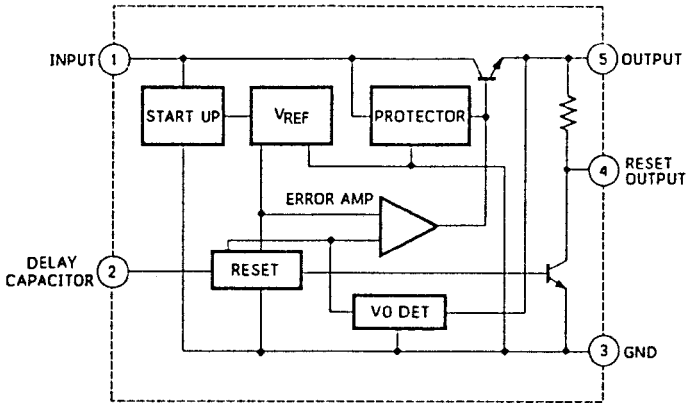

M5236ML : IC802

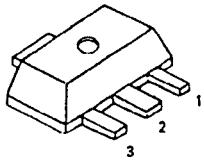

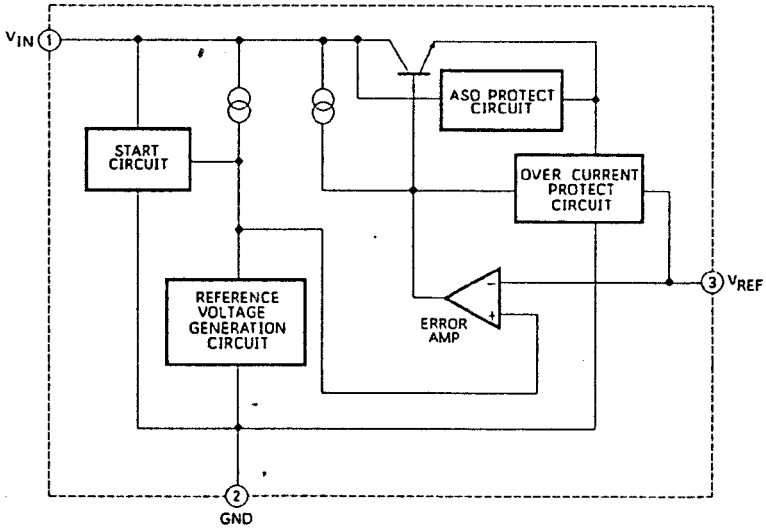

ALPINE®

SERVICE MANUAL

Cassette Deck Mechanism

ADDENDUM & REVISED(V)

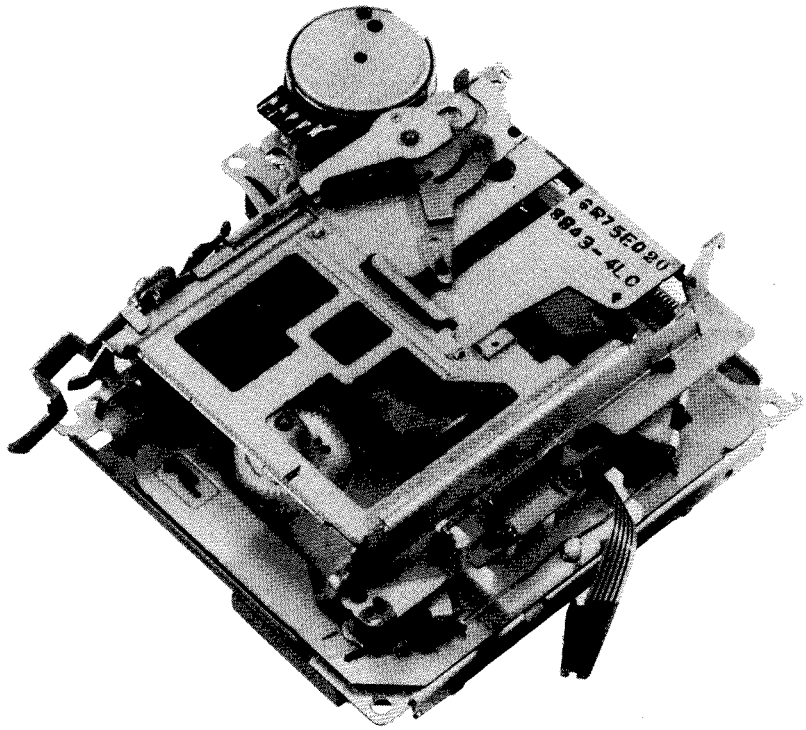

GR/GR-Y SERIES

Contents

List of Usable Lock Washers

	SIZE	PARTS NO.	QUANTITY			
			GR75E Series	GR75L Series	GR-Y Series	GR75H Series
1	(M1.2 × 3.5 × 0.25)	04B41345P01	4	4	4	2
2	(M1.7 × 3.5 × 0.25)	04B41345P02	1	1	1	4
3	(M1.2 × 2.5 × 0.25)	04B41345P11	8	8	8	9
4	(M1.7 × 3.5 × 0.35)	04B41345P12	2	2	2	2
5	(M1.2 × 3.5 × 0.35)	04B41345P15	2	2	2	2
6	(M1 × 2.5 × 0.25)	04B41345P17	1	1	1	2
7	(M2.6 × 5 × 0.25)	04B41345P29	1	1	1	1
8	(M3.1 × 8 × 0.05)	04B41345P30	1	1	1	1
9	(M3.1 × 5 × 0.35)	04B41345P32	2	2	2	2
10	(M1.2 × 2.5 × 0.3)	04B41345P34	1	1	1	0
11	(M1.7 × 2.8 × 0.25)	04B41345P35	1	1	1	2
12	(M2.1 × 4 × 0.25)	04B41345P37	1	1	1	0
13	(M2.1 × 4 × 0.13)	04S40075G05	2	2	2	0
14	(M2.1 × 4 × 0.3)	04S40075G58	0	0	0	1

List of Usable Oil

1) Molykote G paste
2) Grease EM-30L
3) Grease PG-671

List of Usable Jigs

1) GR bottom gear jig (Part No. 44A20788W01)
2) Head height adjustment gauge
   AI-500 (Part No. AI-500)

Memo

Disassembly, Assembly and Replacement of Functional Parts

1. Disassembly and Assembly of Bottom Cover

(1) Turn the mechanism around as shown in Figure 1.
(2) Remove M1 lock washer ① as shown in Figure 1.
(3) Remove three screws ② as shown in Figure 1.
(4) Lift the bottom cover slowly from the position Ⓐ-1, pull the hooks out of the holes in the chassis, and remove the bottom cover as shown in Figure 1.
(5) When remounting the bottom cover, first turn the front of the mechanism up as shown in Figure 2.
(6) Slide the slider in the direction Ⓐ-2 as shown in Figure 2.
(7) Push down the cassette holder in the direction Ⓐ-3 as shown in Figure 2.
(8) Pull the door pin in the direction Ⓐ-4 so that the mechanism is locked in as shown in Figure 2.
(9) Turn the mechanism around as shown in Figure 3.
(10) Pull the automatic metal lever in the direction Ⓐ-5 and the RF solenoid chip in the direction Ⓐ-6 as shown in Figure 3.
(11) Insert the hooks of the bottom cover into the chassis in the direction Ⓐ-7, and then join the part Ⓐ-8 of the bottom cover to the chassis slowly, making sure that the 3 points indicated with the straight lines in the Figure 3 are fitted properly.
If there are troubles in mounting the bottom cover, do not apply force but remove the bottom cover once again and check the positions of the individual parts. (Refer to Figure 3.)
(12) Since the hooks marked Ⓐ-8 will be lifted slightly as shown in Figure 4, insert the jig through the hole Ⓐ-9, and fix it turning the jig slightly in the direction Ⓐ-11.
Instead of operation (12), turn the gear nose slowly with a precision screwdriver etc., taking care not to damage it.
After 2 to 3 turns, it will click into place.
(Refer to Figures 4 and 5.)
(13) Fix the screws and the lock washer that have been removed.

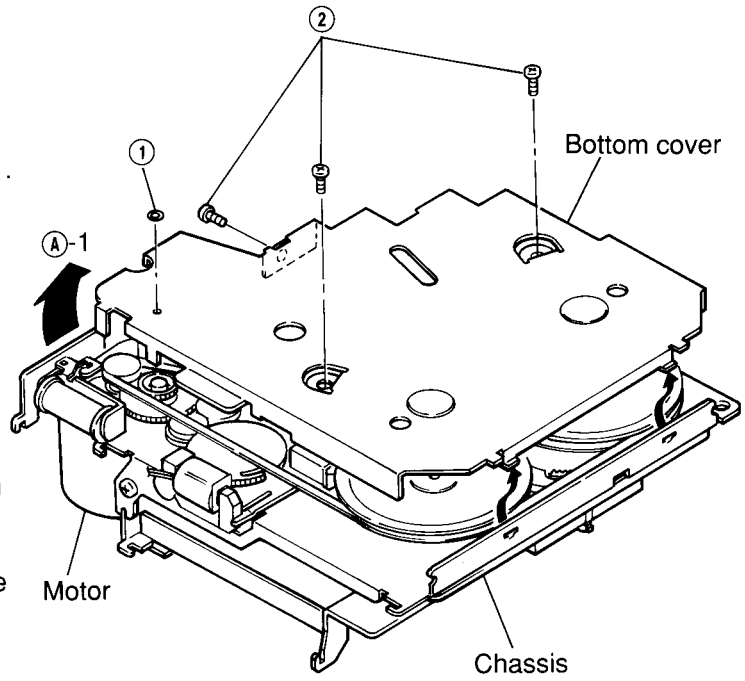

Figure 1

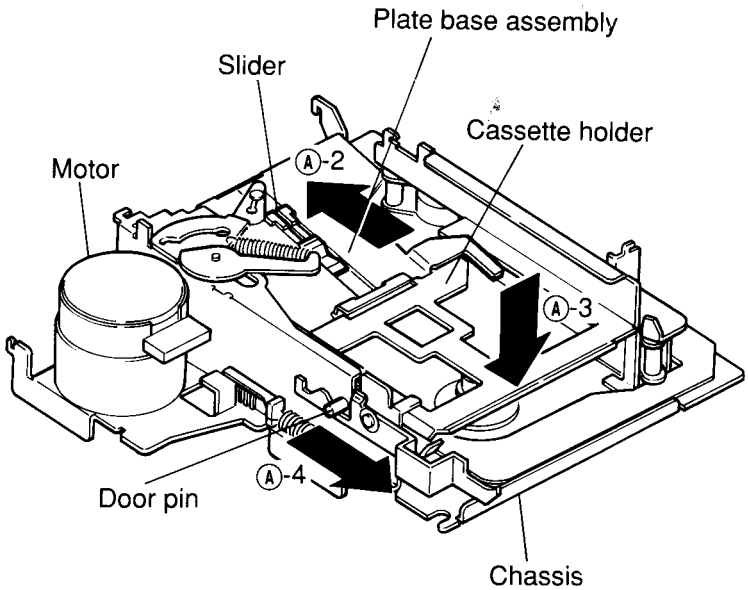

Figure 2

(14) Insert the jig into the hole Ⓐ-9 as shown in Figure and rotate the eject solenoid counterclockwise about 20 times, pulling it in the direction Ⓐ-10 with the finger.
Then the eject operation is completed.
Instead of operation (14), the eject operation can be performed by mounting the mechanism to the product. (Refer to Figures 4 and 5.)

Note: Do not reuse the used lock washers for mounting.
When turning the mechanism, be careful not to drop the gear and the flywheel.
Fasten the three screws with a fastening torque of 6 kg.cm.

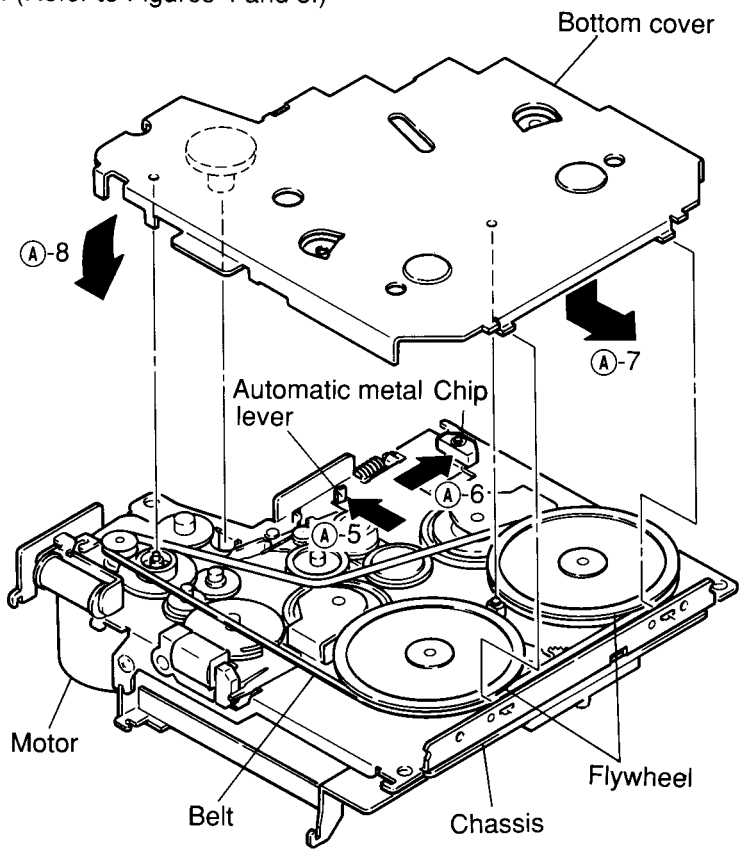

Figure 3

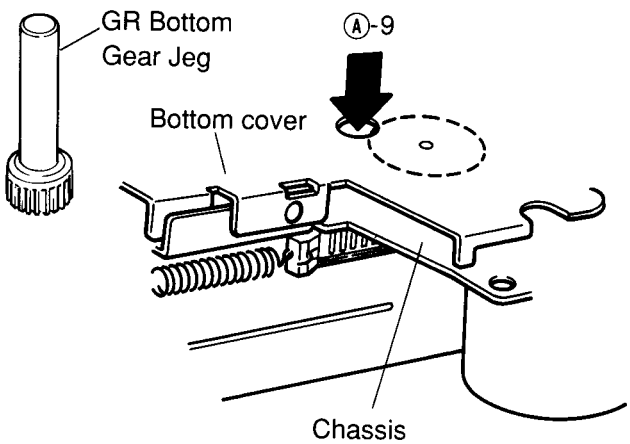

Figure 4

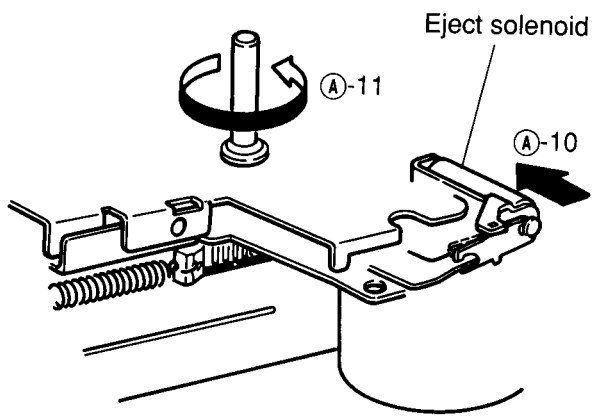

Figure 5

2. Replacement of the bottom cover mounting parts

a. Replacement of the eject gear
(1) Remove M1.2 lock washer ③ as shown in Figure 6.
(2) Pull the eject pinion out of the eject gear and remove the eject gear as shown in Figure 6.
(3) Apply the molykote E paste to the section Ⓑ-1, and mount the eject gear following the removal steps in the reverse order. After replacement is finished, make sure that the gear rotates smoothly. (Refer to Figure 6.)

Note: Do not reuse the used lock washers for remounting.
Take care to avoid damage by piercing and tearing.

b. Replacement of the RF solenoid
(1) Remove two solders ④ and remove the RF solenoid from the bottom cover by pulling it up as shown in Figure 6.
(2) Replace the solenoid with a new one, and remount it following the removal steps in the reverse order as shown in Figure 6.

Note: When removing solder ④, set the temperature of the soldering iron to 350° ± 10° and the soldering time to 1 – 3 seconds. Take care that the solder is not loose, that there is no shortcircuit and that the coating is not damaged.

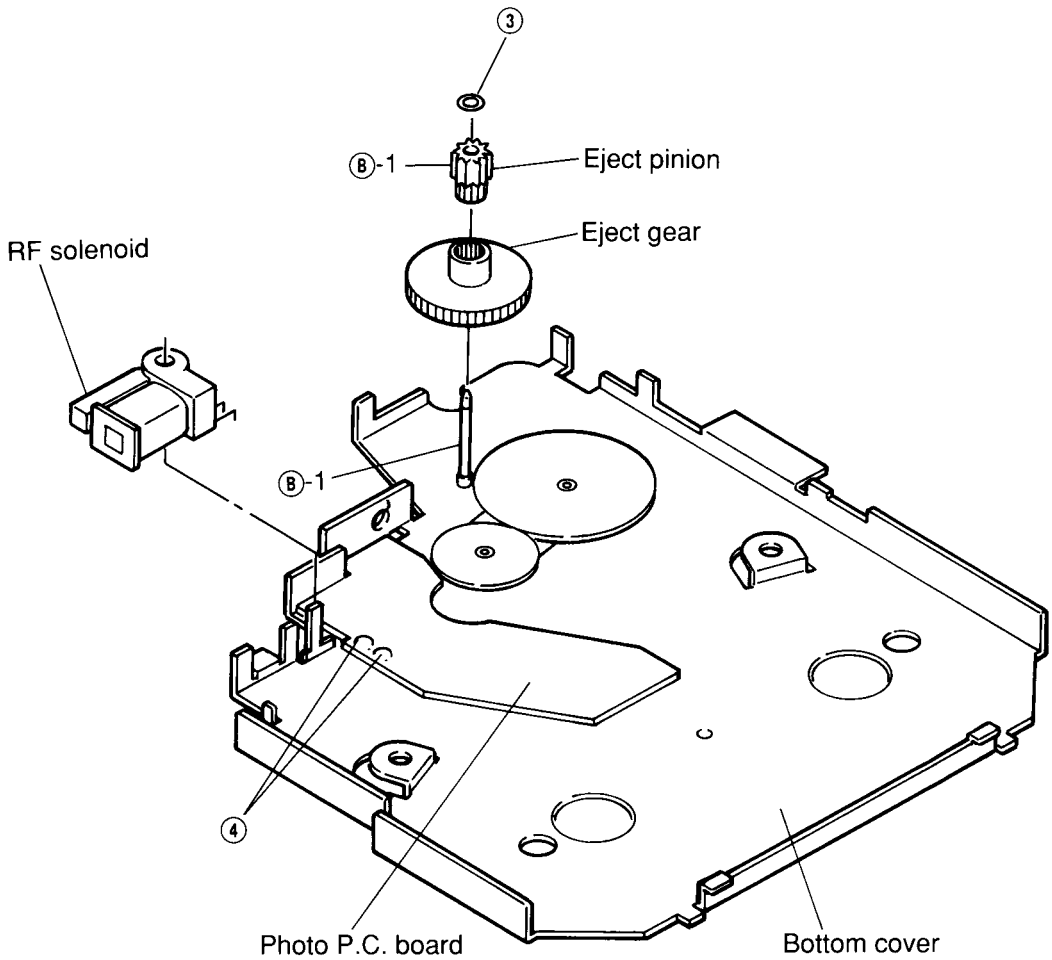

Figure 6

c. Replacement of the photo sensor
(1) Remove four solders ⑤ as shown in Figure 7.
(2) Remove the photo guide together with the photo sensor from the photo P.C. board as shown in Figure 7.
(3) Insert the new photo sensor into the photo guide, and bend the legs of the photo sensor in the direction marked Ⓑ-2 as shown in Figure 7.
(4) Insert the photo guide into the P.C. board and solder the legs so that the photo sensor is set as indicated by ⊡ in Figure 7.

Note: When using the soldering iron, set the temperature of the soldering iron to 350° ± 10° and the soldering time to 1 – 3 seconds. Take care that the solder is not loose, that there is no shortcircuit and that the coating is not damaged. Also take care that the photo guide is properly fixed and straight.

d. Replacement of the detector switch
(Automatic metal pack-in)
(1) Remove 4 solders ⑥ with which the switch is fixed as shown in Figure 7.
(2) Prepare the terminals of the switch of the new solder as shown in Figure 8.
(3) After that, insert the switch into the photo P.C. board, and solder the terminals.

Note: When using the soldering iron, refer to Item 2-C to make sure that the temperature of the soldering iron and the soldering time are proper. Also take care that the switch guide is properly fixed and straight.

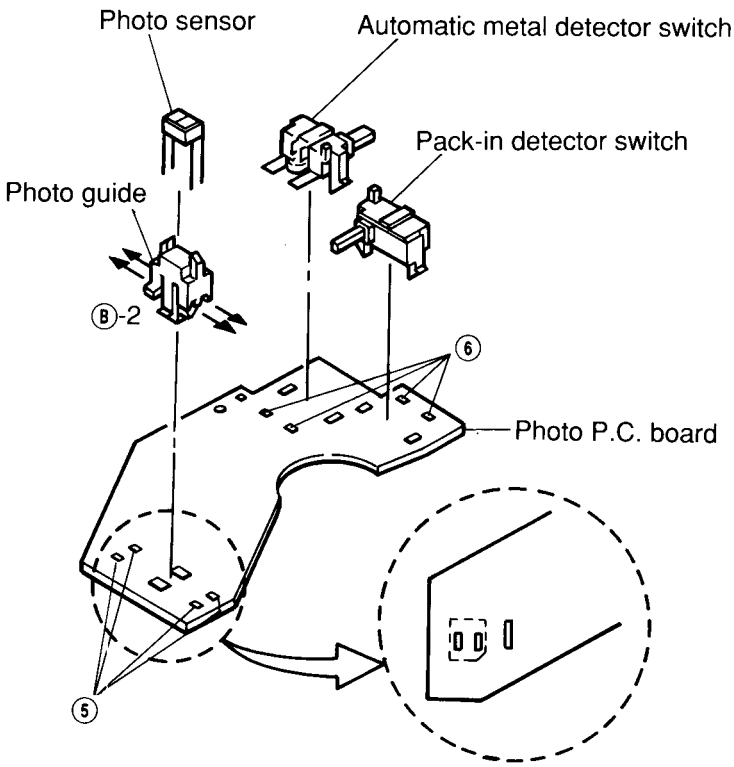

Figure 7

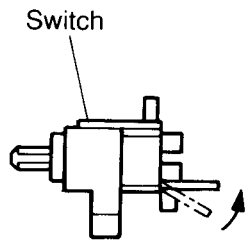

Figure 8

3. Replacement of the mounting parts on the rear of the main chassis

a. Replacement of the belt
(1) After removing the bottom cover, remove the belt.
(2) Clean the new belt with absolute alcohol, and fix it as shown in Figure 9.

Note: When fixing the belt, make sure that it is not twisted or dirty. When removing the belt, do not turn up the front of the chassis.

b. Replacement of the motor
(1) After removing the belt, remove spring ⑦ as shown in Figure 10.
(2) Remove solder ⑧-1, and remove the parallel wire (5P) from the control P.C. board as shown in Figure 11.
(3) Remove two screws ⑨ and ⑩, and remove the motor, taking care not to damage the motor idler gear. (Refer to Figure 10.)
(4) Mount the new motor following the removal steps in the reverse order.

Note: Refer to Item 2-C to make sure that the temperature of the soldering iron and the soldering time are proper. Since the parallel wire is very easily damaged, handle it with care.
Fasten the two screws with a fastening torque of 3 kg.cm.

*When inserting the clutch spring, be careful of the inserting direction as shown in the Figure.

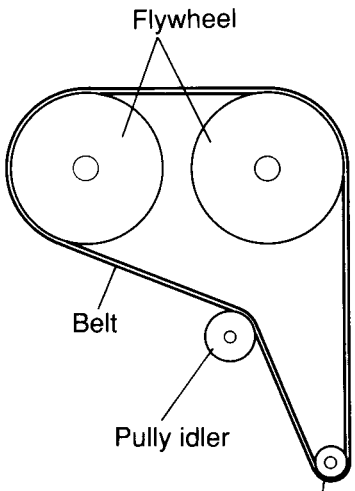

Figure 9

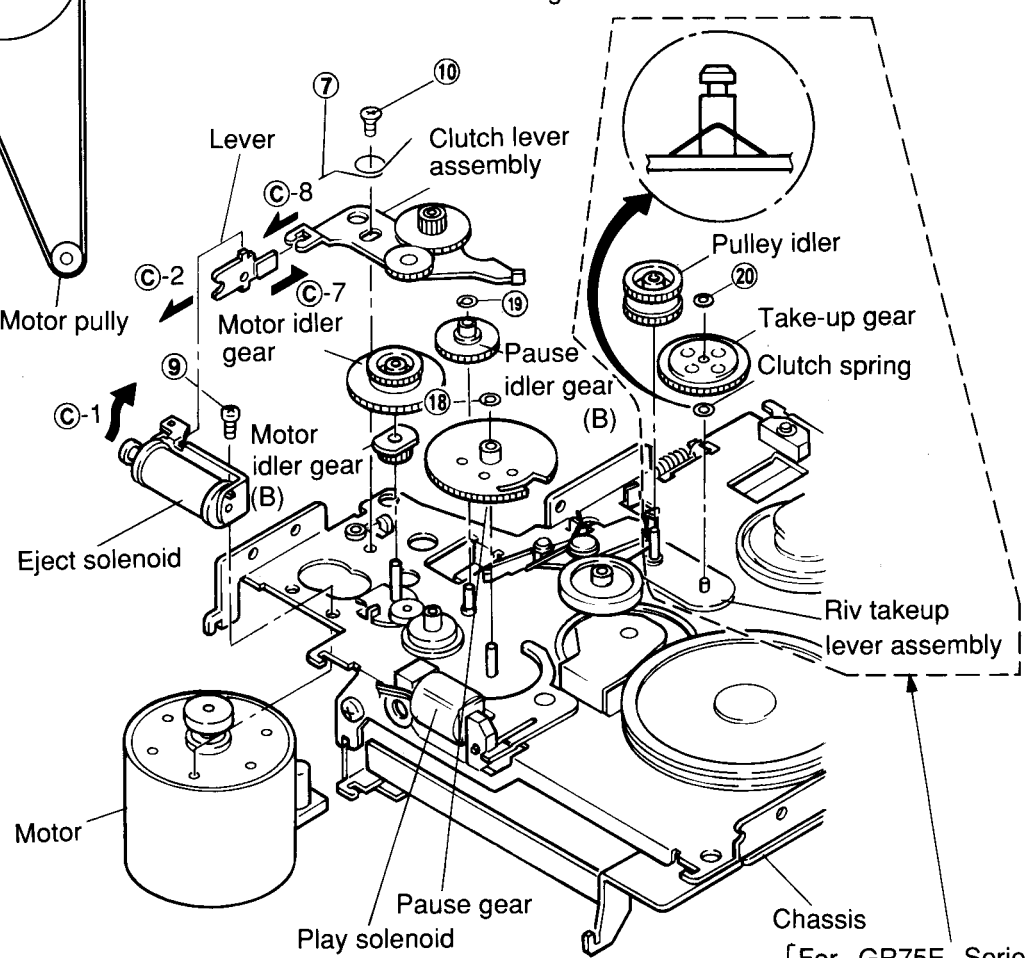

Figure 10

[For GR75E Series
GR75L Series
GR-Y Series
models]

c. Replacement of the flywheels
(1) After removing the belt, pull out the two flywheels. Take care not to loose the polyslider washer ⑪ located between the flywheel and the chassis. (Refer to Figure 12.)
(2) Fix the polyslider washer to the new flywheel and mount the flywheel to the chassis.

d. Replacement of the play solenoid
(1) Remove the two solders ⑧-2 as shown in Figure 11.
(2) Remove one screw ⑫ and remove the solenoid as shown in Figure 11.
(3) Mount the new solenoid following the removal steps in the reverse order.

Note: Refer to Item 2-C to make sure that the temperature of the soldering iron and the soldering time are proper. Fasten the screws with a fastening torque of 2.3 kg.cm.

e. Replacement of the eject solenoid
(1) Remove two solders ⑧-3. Take care not to loose the tube that protects the wire. (Refer to Figure 11.)
(2) Remove screw ⑨ and remove the solenoid as shown in Figure 10.
(3) Align position ⓒ-1 of the new solenoid with position ⓒ-2 of the lever and fasten the screw as shown in Figure 10.
(4) Lead the wire through the tube and solder it.

Note: Refer to Item 2-C to make sure that the temperature of the soldering iron and the soldering time are proper. Fasten the screws with a fastening torque of 3 kg.cm. As the solenoid wires are not insulated, do not let them cross each other.

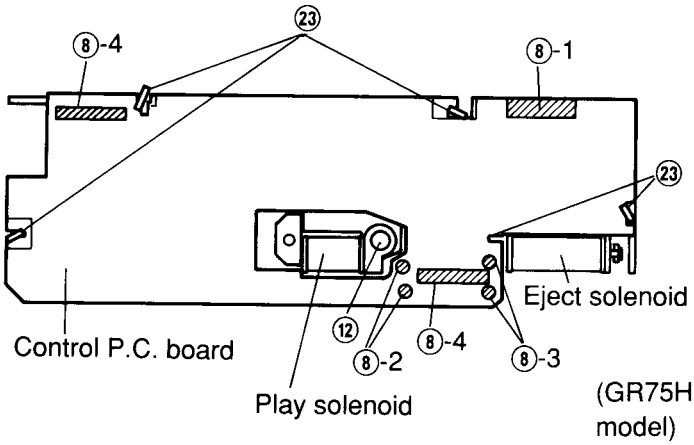

[For GR75E Series model]

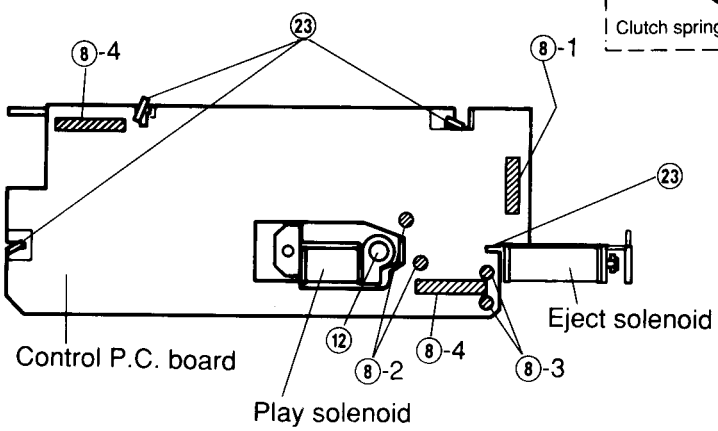

Figure 11

[For GR75L Series
GR-Y Series
GR75H Series models]

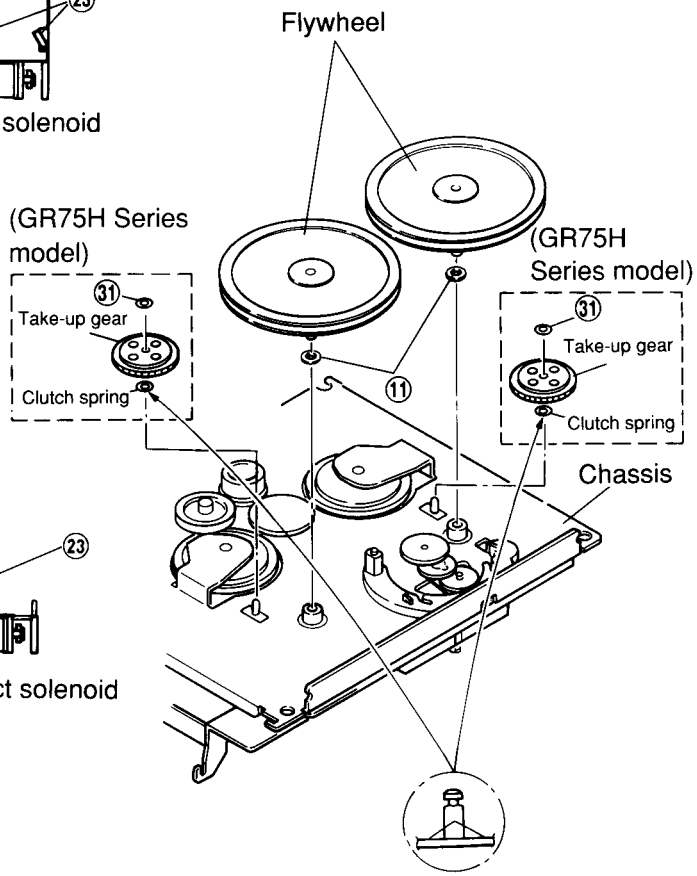

Figure 12

f. Replacement of gears

(f-1) Replacement of the reverse idler gear

(1) Remove M1.2 lock washer ⑬, pull it up from the stud of the chassis and remove the gear as shown in Figure 13.

(2) Remount following the removal steps in the reverse order.

(f-2) Replacement of the sun gear

(1) Remove M1.2 lock washer ⑭, pull it up from the stud of the chassis and remove the gear as shown in Figure 13.

(2) Mount it, following the removal steps in the reverse order.

(f-3) Replacement of the fixing gear

(1) Adjust the two mounting claws for the fix gear on the chassis ⑮ and remove the section ⓒ-3 of the gear by pulling it up in the direction of the arrow shown in Figure 13.

(2) Insert the section ⓒ-4 of the new gear into the chassis, and mount it following the removal steps in the reverse order as shown in Figure 13.

(f-4) Replacement of the reverse lever assembly and planet gear

(1) Remove both the fixing gear and the sun gear and remove the reverse lever assembly as shown in Figure 13.

(2) Remove M1.7 lock washer ⑯ and remove the planet gear as shown in Figure 14.

(3) Mount the new planet gear and reverse lever following the removal steps in the reverse order.

Notes on f-1 through f-4:

After mounting all parts, check if the reverse lever moves in the directions marked ⓒ-5 when the reverse gear is turned clockwise and counterclockwise.

* After mounting the fixing gear, bend the claws ⑮ into the form of as shown in the Figure.

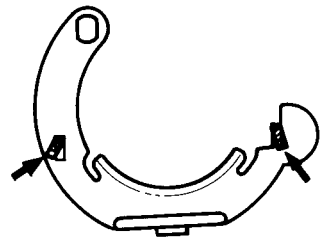

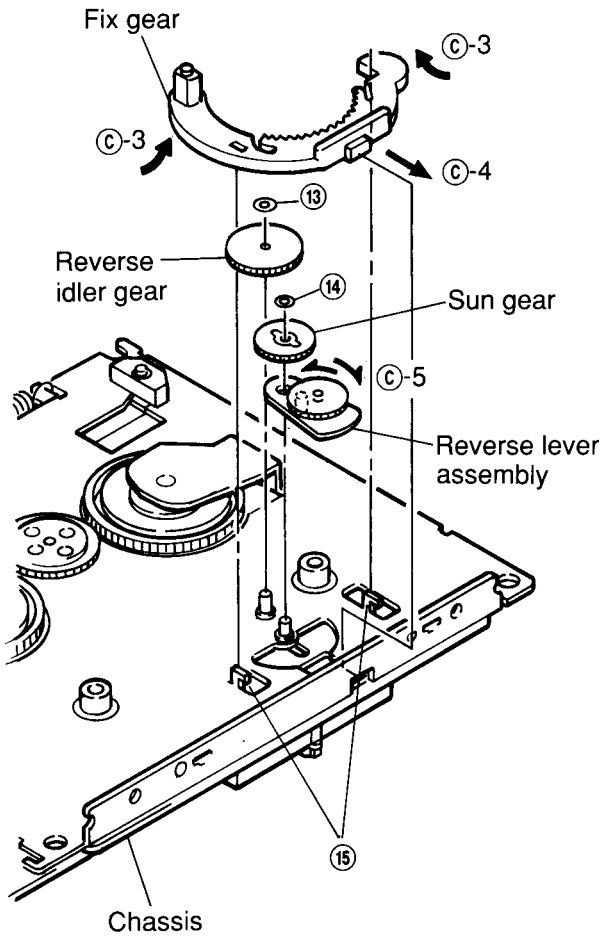

Figure 13

(f-5) Replacement of the clutch lever assembly and eject idler gear
(1) After removing the motor, remove the motor idler gear and the motor idler gear (B) and remove the clutch lever assembly as shown in Figure 10.
(2) Remove M1.2 lock washer ⑰ and remove the eject idler gear as shown in Figure 15.
(3) Mount the new gears and clutch lever following the removal steps in the reverse order.

Note: When mounting the gears to the lever, apply grease (PG-671) to the position Ⓒ-6 as shown in Figure 15. Align the position Ⓒ-7 with the position Ⓒ-8 and mount the clutch lever as shown in Figures 10 and 15.

(f-6) Replacement of the pause gear
(1) Remove M1.2 lock washer ⑱ and remove the pause gear pulling it up from the stud of the chassis as shown in Figure 10.
(2) Mount the new gear following the removal steps in the reverse order.

(f-7) Replacement of the pause idler gear (B)
(1) After removing the motor and the motor idler gear, remove M1.2 lock washer ⑲ and remove the gear by pulling it up from the stud of the chassis as shown in Figure 10.
(2) Mount the new gear by following the removal steps in the reverse order.

(f-8) Replacement of the take-up gear
(1) After removing the belt and the pulley idler gear, remove M1.2 lock washer ⑳ by pulling it up from the stud of the riv take-up lever assembly as shown in Figure 10.
After removing the Flywheel, remove M1.2 lock washer ㉛ and remove the gear by pulling it up from the stud of the chassis as shown in figure 12. [For GR75H Series model]
(2) Remount the take-up gear following the removal steps in the reverse order.

Notes on f:
Do not reus e the used washers. Take care to avoid damage by piercing and tearing.

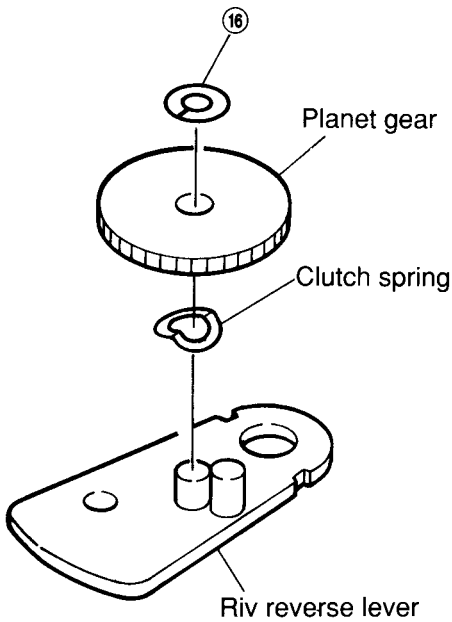

[Disassembly Reverse Lever Assembly]

Figure 14

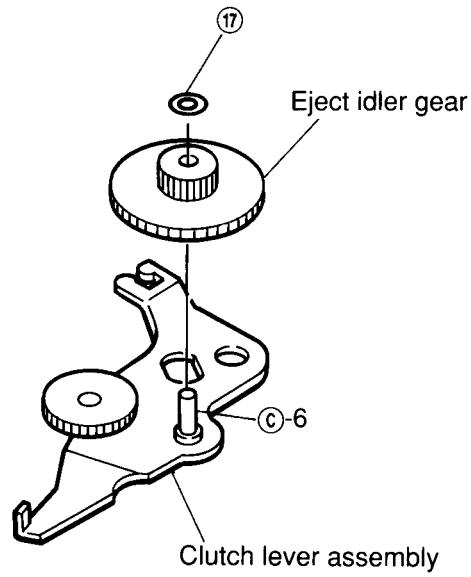

Figure 15

4. Replacement of the parts mounted on the front of the main chassis

a. Replacement of the audio P.C. board
(1) Remove two solders ㉑ and remove the parallel wire (7P) and the head P.C. board as shown in Figure 16.
(2) Adjust the two claws ㉒ to the rectangular holes on the P.C. board and remove the P.C. board as shown in Figure 16.
(3) After replacement, mount the new P.C. board following the removal steps in the reverse order.

Note: The head P.C. board and the parallel wire are easily damaged. Handle them with care. Refer to Item 2-C to make sure that the temperature of the soldering iron and the soldering time are proper. Do not bring the soldering iron near the head P.C. board.

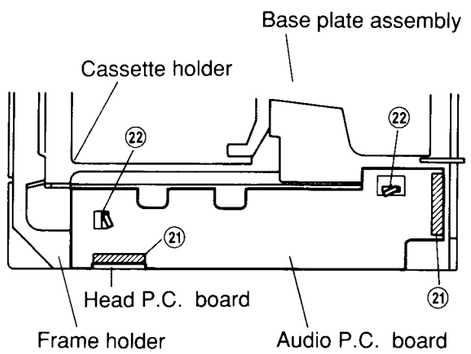

Figure 16

b. Replacement of the control P.C. board
(1) Remove seven solders ⑧ and remove the three parallel wires and the wires of the eject solenoid and of the play solenoid as shown in Figure 11.
(2) Remove five claws ㉓ and remove the P.C. board as shown in Figure 11. [For GR75E Series model] Remove four claws ㉓ and remove the P.C. board as shown in Figure 11. [For GR75L Series, GR-Y Series, GR75H Series models]
(3) After replacing the old P.C. board with a new one, mount it following the removal steps in the reverse order.

Note: As mentioned in Item 4-a, handle the parallel wires carefully, and be sure that the temperature of the soldering iron and the soldering time are proper. As the wires of the eject solenoid are not insulated, do not let them cross each other.

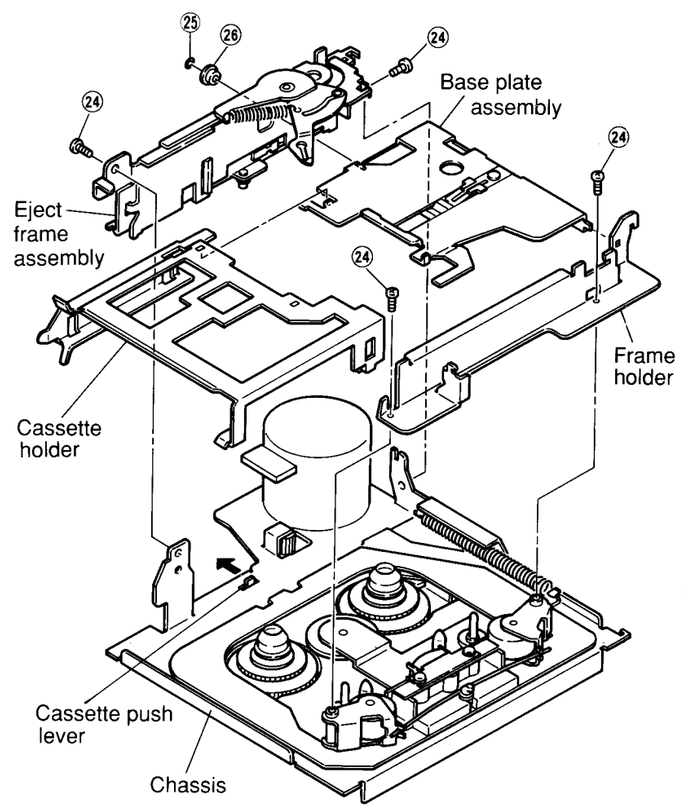

Figure 17

c. Disassembly and assembly of the cassette holder
(1) Remove four screws ㉔ and remove the eject frame assembly and the frame holder as shown in Figure 17.
(2) Remove M1.2 lock washer ㉕ and plate base roller ㉖ and remove the cassette holder and the base plate assembly as shown in Figure 17.
(3) Remount them following the removal steps in the reverse order.

Notes: 1. When mounting the cassette holder and the base plate, insert the slider shaft into the eject arm and fix them turning the slider shaft in the direction indicated by the arrow in the figure. Make sure that the cassette holder and the base plate are in the cassette-in mode during this operation. (Refer to Figure 18).
2. When mounting the eject frame assembly, push the cassette push lever in the direction indicated by the arrow in the Figure 17.
3. When mounting the base plate assembly and the eject frame assembly, or when mounting the eject frame assembly to the chassis, do not apply excessive force to avoid deformations of the eject arm and the frame.
4. Do not reuse the used washers. Take care to avoid damage by piercing and tearing.

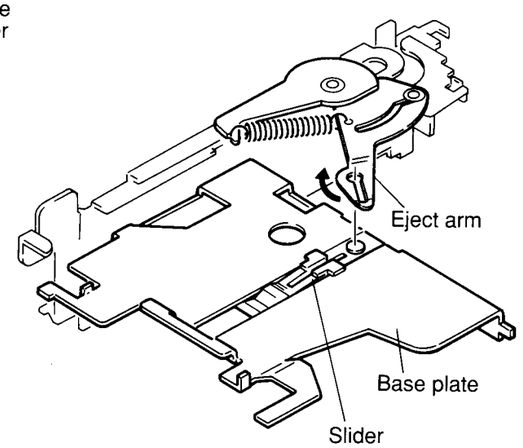

Figure 18

d. Replacement of the reels
(1) Remove M1.7 two lock washers ㉖ (Refer to figure 19).
(2) Move the select lever in the direction marked Ⓓ-1 in the Figure and remove the reel by gripping the reel gear as shown in Figure 19.
(3) After replacement, mount the new reels following the removal steps in the reverse order.
(4) After mounting, check the tape speed and the wow and flutter with test tape MTT-111.

Note: Since the reel is easily loosened if the cap is gripped, always handle it gripping the gear. Do not reuse the used washers. Take care to avoid damage by piercing and tearing.

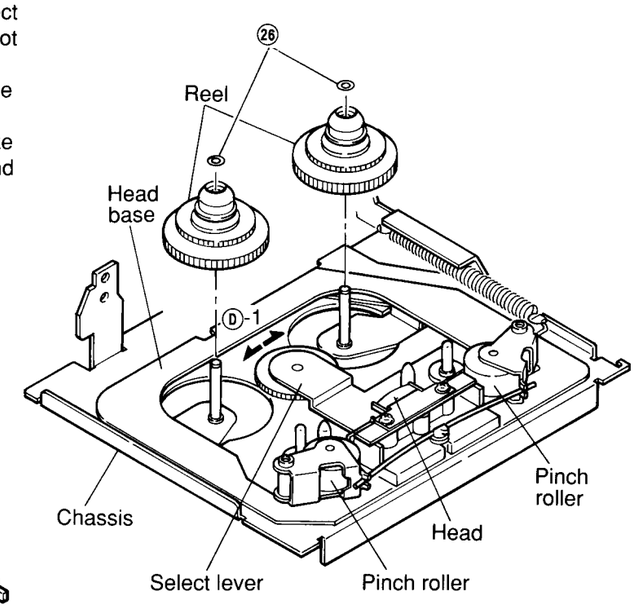

Figure 19

e. Replacement of the pinch rollers
(1) Remove pinch roller spring ㉗ as shown in Figure 20.
(2) Remove M3.1 two lock washers ㉘ and remove the pinch roller as shown in Figure 20.
(3) Mount the pinch rollers following the removal steps in the reverse order.
Apply insulation coating to the position Ⓓ-2 of the pinch roller as shown in Figure 20.

Note: Make sure that the pinch rollers are thoroughly fixed and that they are not deformed. Do not reuse used lock washers. Take care to avoid damage by piercing and tearing.

f. Replacement of the head
(1) After removing the pinch roller spring, remove two screws ㉙ as shown in Figure 21.
(2) Remove solder ㉚ and remove the head from the head P.C. board as shown in Figure 22.
(3) After replacement, mount the new head following the removal steps in the reverse order.

Notes: 1. Refer to Item 2-C to make sure that the temperature of the soldering iron and the soldering time are proper. Do not bring the soldering iron near the head P.C. board. Make sure that the head P.C. board is not lifted.
2. Fasten the two screws with a fastening torque of 2.3 kg.cm. Note that the tension of the head spring can be decreased if the screws are fastened too strongly.

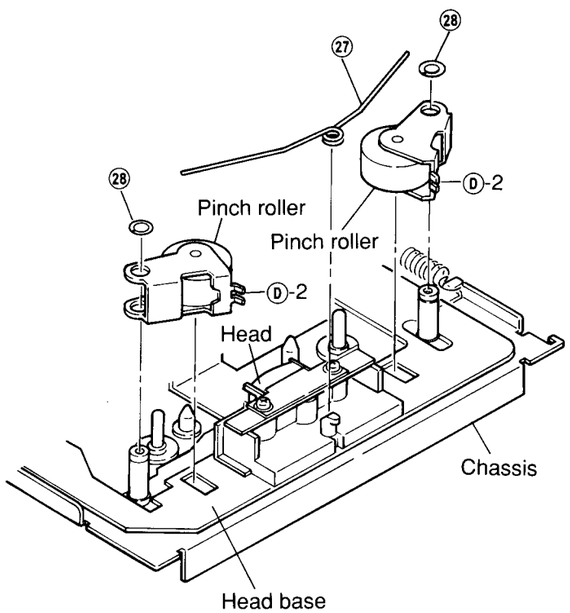

Figure 20

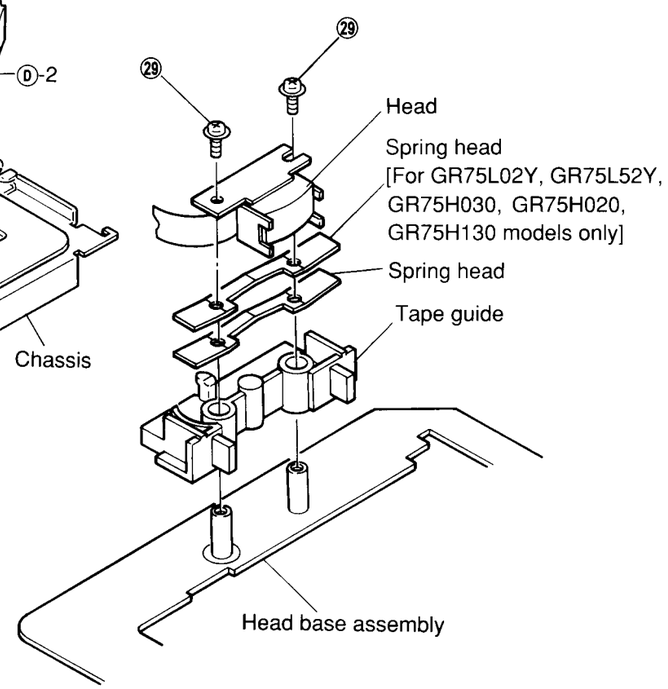

Figure 21

(4) Adjust the height of the head as shown in Figures 23, 24 and 25.
① Place the height adjustment gauge (AI-500) on the head base, and adjust the height so that the check bar fits in the tape head guide smoothly.
② When the check bar touches the top (or bottom) of the tape guide, insert a spacer (t 0.1 mm or polislider washer t 0.13 mm).
If necessary, remove the spacer.

Note: If you do not have a height gauge like described in (4)-①, run the tape at normal speed and adjust the height of the head and the tape head guide so that the tape does not curl.

(5) After having assembled the complete mechanism, adjust the angle of the head with test tape MTT-113C. (Refer to chapter "Adjustment of the head angle".) After the adjustment, apply the screw lock and fix the screws.

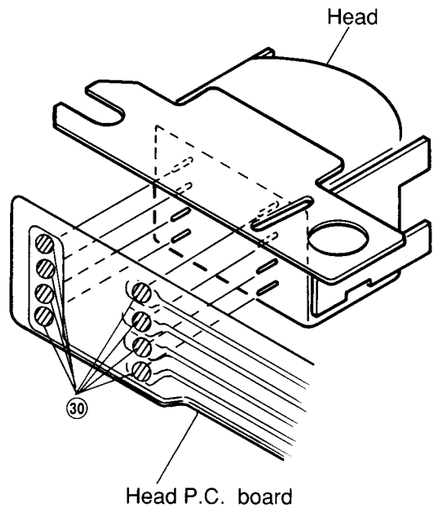

Figure 22

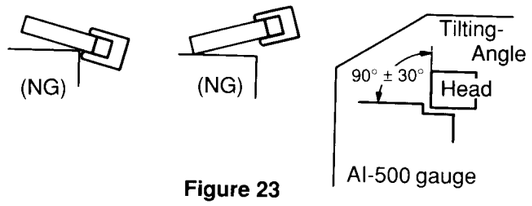

Figure 23

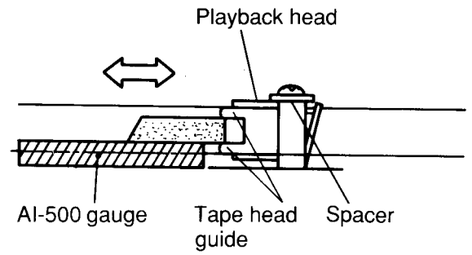

Figure 24

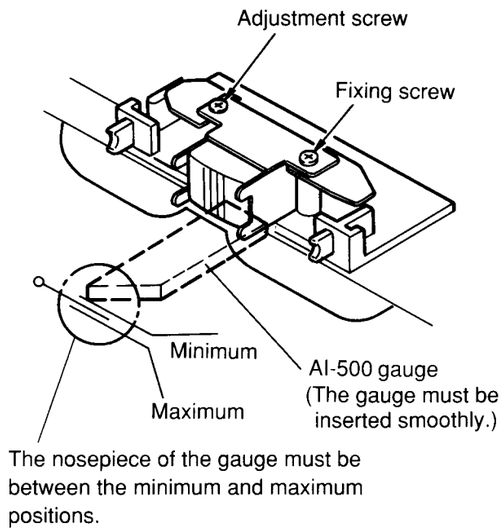

Figure 25

Exploded View (GR75E Series) (1/4)

● For GR75E010/01A/020 Models

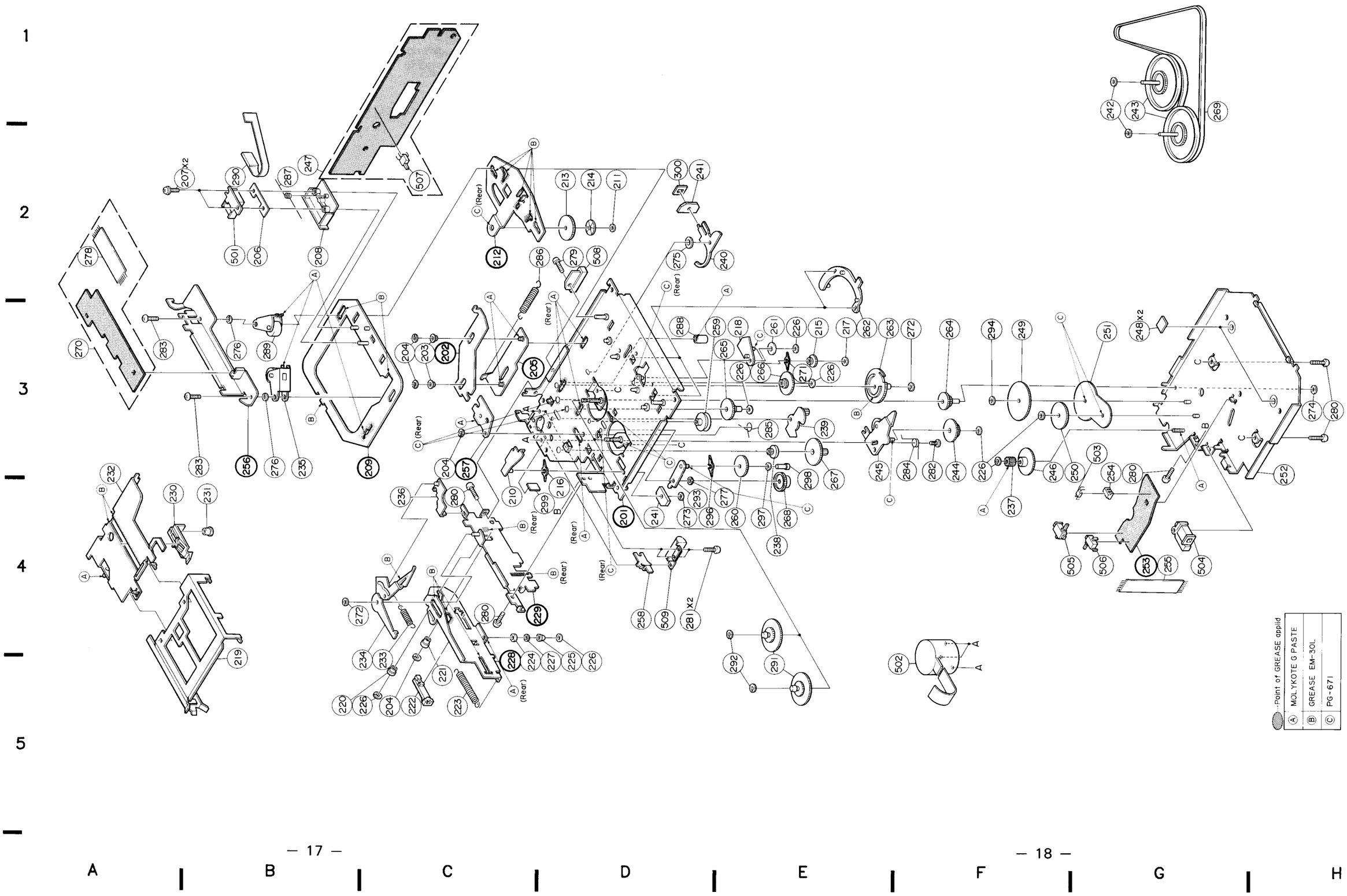

Cassette Deck Assembly Parts List (GR75E Series) (1/4)

Note : The parts without parts list are not supplied.

	Symbol No.	IN-dex	Part No.	Description
	203	3-C	43A11072W01	Roller, Sub Head
	204		04B41345P01	Washer, Lock(M1.2)
	206	2-B	41A31756W01	Spring, Head
	207	2-B	03S40019G03	Screw, P-Locks(M2x4)
	208	2-B	43B12545W01	Tape, Guide
	210	4-C	01A10206W01	Assy., Riv Lever R/F Sol
	211	2-D	04B41345P29	Washer, Lock(M2.6)
	213	2-D	44A10295W01	Gear, Sensor
	214	2-D	14A10681W01	Reflector
	215	3-E	44A30480W01	Gear, Planet
	216	3-E	41A10097W02	Spring, Clutch
	217	3-E	04B41345P35	Washer, Lock(M1.7)
	218	3-E	01A30824W01	Assy., Riv Lever Reverse
●	219	4-B	07B40283W01	Holder, Cassette
■	219	4-B	07B40283W01	Holder, Cassette
▲	219	4-B	07B10074W01	Holder, Cassette
	220	5-B	43A12583W01	Roller, Eject
	221	5-C	43A63281F01	Roller, Plate Base
	222	5-C	44A82206F01	Rack
	223	5-C	41B10386W03	Spring, GR(Rack)
	224	4-C	43A10121W01	Roller, Eject A
	225	4-D	43A10360W01	Roller, Eject B
	226		04B41345P11	Washer, Lock(M1.2)
	227	4-D	43A12377W01	Roller, Eject C
	230	4-A	45B10376W01	Slider
	231	4-B	47A63278F01	Shaft, Slider
	232	4-A	01A10212W01	Assy.,Riv Plate Base
	233	4-C	41B10386W01	Spring, Eject Arm
	234	4-B	01A10148W01	Assy., Riv Eject Arm A
	235	3-B	01B30863W02	Assy., Pinch Roller
	236	4-C	45A10087W01	Lever Pack In SW
	237	4-F	44A12975W01	Pinion, Eject
	238	4-E	44A13617W01	Gear, Motor Idler(B)
	239	3-E	01A10201W02	Assy., Riv Lever Pause
	240	2-D	45A40725W01	Lever, Play Sol
	241		76T10374W01	Chip
	242	1-G	04S40075C05	Washer Polyslider (M2.1)
	243	1-G	01A10368W01	Assy., Flywheel
	244	3-F	44A10141W01	Gear, Eject Idler
	245	3-E	01A10205W02	Assy., Riv Lever Clutch A

Notes: ● ; For GR75E020 model only ■ ; For GR75E010 model only
▲ ; For GR75E01A model only Others ; Common

	Symbol No.	IN-dex	Part No.	Description
	246	3-F	44A10145W01	Gear, Eject
	247	2-B	01V11500W18	Assy., GR Control P.C. Board
	248	3-G	43A41656W01	Spacer, UHMW
	249	3-F	44A11063W01	Gear, Bottom A
	250	3-F	44A11064W01	Gear, Bottom B
	251	3-G	34A11122W02	Washer, GR
	252	3-H	01A10210W02	Assy., Riv. Cover Bottom
	254	3-G	15B11065W01	Guide, Photo
	255	4-G	30T15126W01	Wire, PC Sensor(7P)
	258	4-D	45A10101W01	Lever, Eject Sol
	259	3-D	49A10131W01	Pulley, Idler
	260	4-E	44A10133W01	Gear, Take Up
	261	3-E	44A10134W01	Gear, Sun
	262	3-E	44B10135W01	Gear, Fix
	263	3-E	44B30484W01	Gear, Pause
	264	3-F	44A10137W01	Gear, Pause Idler A
	265	3-D	44A10379W01	Gear, Pause Idler B
	266	3-E	44A10138W01	Gear, Reverse Idler
	267	3-E	44A10139W01	Gear, Motor Idler
	268	4-E	44A11062W01	Gear, Reel Idler
	269	1-G	42A10380W01	Belt, GR
●	270	3-A	01V14700W68	Assy., GR Audio P.C. Board
■	270	3-A	01V11500W19	Assy., GR Audio P.C. Board
▲	270	3-A	01V11500W19	Assy., GR Audio P.C. Board
	271	3-E	41A30475W01	Spring, Clutch
	272		04B41345P15	Washer, Lock(M1.2)
	273	4-D	04B41345P02	Washer, Lock(M1.7)
	274	3-H	04B41345P17	Washer, Lock(M1)
	275	2-D	04B41345P30	Washer, Lock(M3.1)
	276		04B41345P32	Washer, Lock(M3.1)
	277	4-E	04B41345P37	Washer, Lock(M2.1)
	278	2-A	30T15126W02	Wire, PC Joint 7P
	279	2-D	03S44205G78	Screw, Pan(M2x6)
	280		03S44205G30	Screw, Pan(M2.6x4)
	281	4-D	03S72235F53	Screw, Pan(M2x3.3)
	282	3-F	03A12132W02	Screw, Eject Clutch (M2x2.3)
	283		03S43997P64	Screw, Pan(M1.7x3)
	284	3-F	41A10384W01	Spring, Eject Clutch
	285	3-E	41A10385W01	Spring, Cas Push
	286	2-C	41B10386W02	Spring, Sub Head

	Symbol No.	IN-dex	Part No.	Description
	287	2-B	41A10387W01	Spring, Pinch Roller
	288	3-D	43A12719W01	Roller, Pause
	289	3-B	01B30863W01	Assy., Pinch Roller
	290	2-B	84T25151W01	Head P.C. Board
	291	4-E	01T35403W01	Assy., Reel
	292	4-E	04B41345P12	Washer, Lock(M1.7)
	293	4-D	01A30161W01	Assy., Riv Lever Take Up
	294	3-F	04B41345P34	Washer Lock(M1.2)
	296	4-D	41A40910W01	Spring, Clutch
	297	4-E	43A41543W01	Washer, Som(M1.2)
	298	3-E	47A41458W01	Pin, Take Up
	299	4-C	43A40388W01	Spacer, Polyslider
	300	2-D	43A41744W01	Lock, Solenoid

Miscellaneous

●	501	2-B	88T15971W01	Head
■	501	2-B	88T10373W01	Head
▲	501	2-B	88T10373W01	Head
	502	4-E	01V11500W64	Assy., Motor(Main, 13.2V-80mA)
	503	3-G	51T15144W01	Sensor, Photo
	504	4-G	01T10371W01	R/F Sol. Assy.
	505	4-F	40T15382W01	SW., Detector (Pack Down)
	506	4-G	40T15382W01	SW., Detector(Metal)
	507	2-C	40T15222W01	SW., Detector (Pack In)
	508	2-D	01T15249W01	Assy., Play Solenoid
	509	4-D	01T10369W02	Assy., Eject Solenoid

Notes: ● ; For GR75E020 model only ■ ; For GR75E010 model only
▲ ; For GR75E01A model only Others ; Common

Exploded View (GR75L Series) (2/4)

● For GR75L020/02A Models

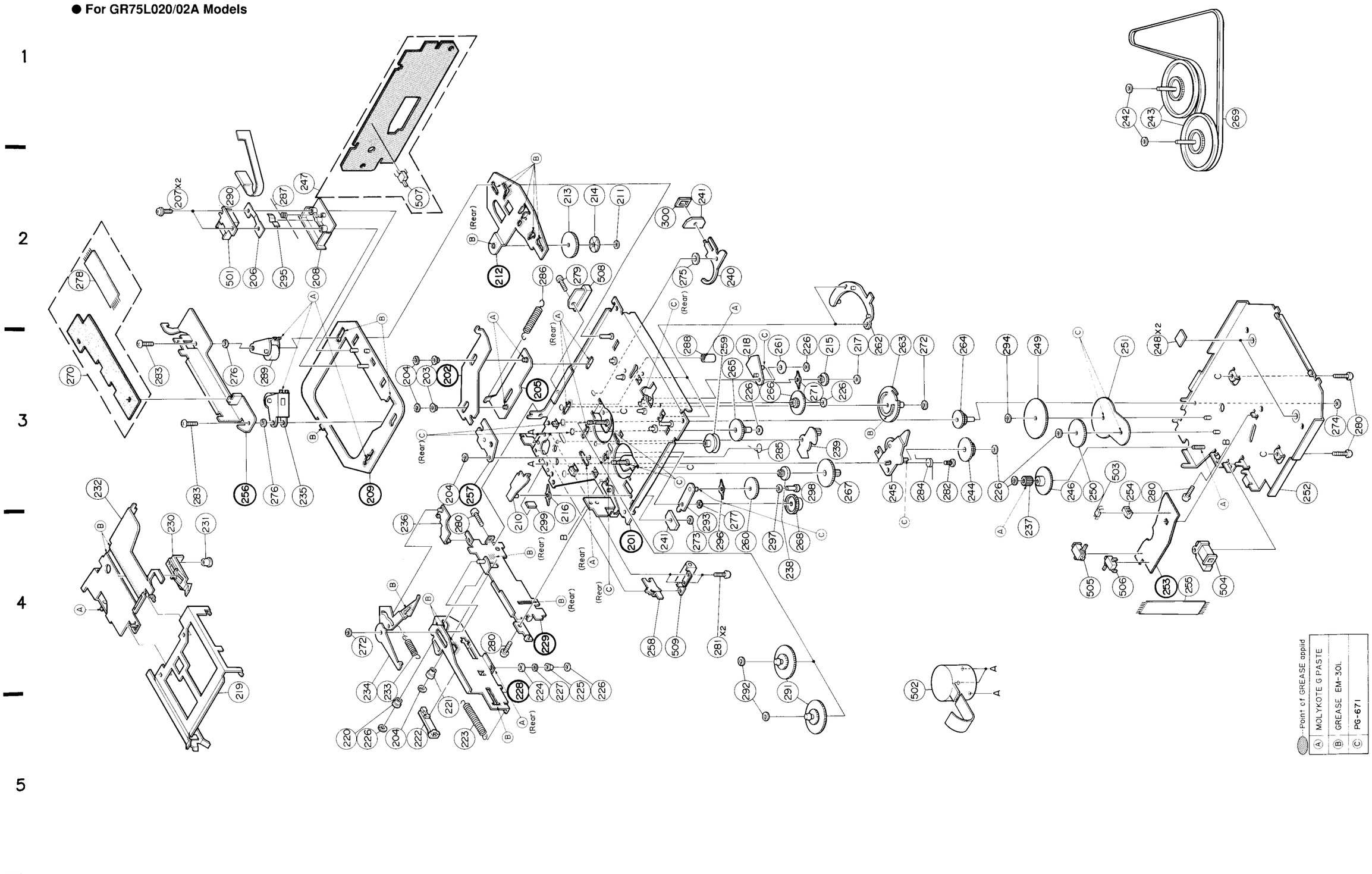

Cassette Deck Assembly Parts List (GR75E Series) (2/4)

Note : The parts without parts list are not supplied.

Symbol No.	IN-dex	Part No.	Description
203	3-C	43A11072W01	Roll, Sub Head
204		04B41345P01	Washer, Lock(M1.2)
206	2-B	41A31756W01	Spring, Head
207	2-B	03S40019G03	Screw, F-Locks(M2x4)
208	2-B	43B12545W01	Tape, Guide
210	4-C	01A10206W01	Assy., Riv Lever R/F Sol.
211	2-D	04B41345P29	Washer, Lock(M2.6)
213	2-D	44A10295W01	Gear, Sensor
214	2-D	14A10681W01	Reflector
215	3-E	44A30480W01	Gear, Planet
216	3-E	41A10097W02	Spring, Clutch
217	3-E	04B41345P35	Washer, Lock(M1.7)
218	3-E	01A30824W01	Assy., Riv Lever Reverse
219	4-B	07B40283W01	Holder, Cassette
220	5-B	43A12583W01	Roller, Eject
221	5-C	43A63281F01	Roller, Plate Base
222	5-C	44A82206F01	Rack
223	5-C	41B10386W03	Spring, GR(Rack)
224	4-C	43A10121W01	Roller, Eject(A)
225	4-D	43A10360W01	Roller, Eject(B)
226		04B41345P11	Washer, Lock(M1.2)
227	4-D	43A12377W01	Roller, Eject(C)
230	4-A	45B10376W01	Slider
231	4-B	47A63278F01	Shaft, Slider
232	4-A	01A10212W01	Assy., Riv Plate Base
233	4-C	41B10386W01	Spring, Eject Arm
234	4-B	01A21754W01	Assy., Riv Eject Arm(A)
235	3-B	01B30863W02	Assy., Pinch Roller
236	4-C	45A10087W01	Lever, Pack In SW.
237	4-F	44A20314W01	Pinion, Eject
238	4-E	44A13617W01	Gear, Motor Idler(B)
239	3-E	01A10201W02	Assy., Riv Lever Pause
240	2-E	45A40725W01	Lever, Play Sol
241		76T10374W01	Chip
242	1-G	04S40075G05	Washer, Polyslider (M2.1)
243	1-G	01A10368W01	Assy., Flywheel
244	3-F	44A10141W01	Gear, Eject Idler
245	3-E	01A10205W02	Assy., Riv Lever Clutch(A)
246	3-F	44A10145W01	Gear, Eject
247	2-B	01V23700W03	Assy., GR Control P.C. Board

Notes : ◆ ; For GR75L020 model only ○ ; For GR75L02A model only
Others ; Common

Symbol No.	IN-dex	Part No.	Description
248	3-G	43A41656W01	Spacer, UHMW
249	3-F	44A11063W01	Gear, Bottom(A)
250	3-F	44A11064W01	Gear, Bottom(B)
251	3-G	34A11122W02	Washer, GR
252	3-H	01A10210W02	Assy., Riv. Cover Bottom
254	3-G	15B11065W01	Guide, Photo
255	4-G	30T15126W01	Wire, PC Sensor(7P)
258	4-D	45A10101W01	Lever, Eject Sol.
259	3-D	49A10131W01	Pulley, Idler
260	4-E	44A10133W01	Gear, Take Up
261	3-E	44A10134W01	Gear, Sun
262	3-E	44B10135W01	Gear, Fix
263	3-E	44B21670W01	Gear, Pause
264	3-F	44A10137W01	Gear, Pause Idler(A)
265	3-D	44A10379W01	Gear, Pause Idler(B)
266	3-E	44A10138W01	Gear, Reverse Idler
267	3-E	44A10139W01	Gear, Motor Idler
268	4-E	44A11062W01	Gear, Reel Idler
269	1-G	42A10380W01	Belt, GR
270	3-A	01V14700W68	Assy., GR Audio P.C. Board
271	3-E	41A30475W01	Spring, Clutch
272	3-F	04B41345P15	Washer, Lock(M1.2)
273	4-D	04B41345P02	Washer, Lock(M1.7)
274	3-H	04B41345P17	Washer, Lock(M1)
275	2-D	04B41345P30	Washer, Lock(M3.1)
276		04B41345P32	Washer, Lock(M3.1)
277	4-E	04B41345P37	Washer, Lock(M2.1)
278	2-A	30T15126W02	Wire, PC Joint 7P
279	2-D	03S44205G78	Screw, Pan(M2x6)
280		03S44205G30	Screw, Pan(M2.6x4)
281	4-D	03S72235F53	Screw, Pan(M2x3.3)
282	3-F	03A12132W02	Screw, Eject Clutch (M2x2.3)
283		03S43997P64	Screw, Pan(M1.7x3)
284	3-F	41A10384W01	Spring, Eject Clutch
285	3-E	41A10385W01	Spring, Cas. Push
286	2-C	41B10386W02	Spring, Sub Head
287	2-B	41A10387W01	Spring, Pinch Roller
288	3-D	43A12719W01	Roller, Pause
289	3-B	01B30863W01	Assy., Pinch Roller
290	2-B	84T25151W01	Head P.C. Board

Symbol No.	IN-dex	Part No.	Description
291	4-E	01T35403W02	Assy., Reel
292	4-E	04B41345P12	Washer, Lock(M1.7)
293	4-D	01A30161W01	Assy., Riv Lever Take Up
294	3-F	04B41345P34	Washer, Lock(M1.2)
295	2-B	26A20537W01	Shield, Plate
296	4-D	41A40910W01	Spring, Clutch
297	4-E	43A41543W01	Washer, Som(M1.2)
298	3-E	47A41458W01	Pin, Take Up
299	3-D	43A40388W01	Spacer, Polyslider
300	2-D	43A41744W01	Lock, Solenoid

Miscellaneous

	Symbol No.	IN-dex	Part No.	Description
	501	2-B	88T15971W01	Head
◆	502	4-E	01V23900W60	Assy., Motor(13.2V-105mA)
○	502	4-E	01V43400W37	Assy., Motor(13.2V-88mA)
	503	3-G	51T15144W01	Sensor, Photo
	504	4-G	01T10371W01	R/F Sol. Assy
	505	4-F	40T15382W01	SW., Detector (Pack Down)
	506	4-G	40T15382W01	SW., Detector (Metal)
	507	2-C	40T15222W01	SW., Detector (Pack In)
	508	2-D	01T15249W01	Assy., Play Solenoid
	509	4-D	01T10369W02	Assy., Eject Solenoid

Notes : ◆ ; For GR75L020 model only ○ ; For GR75L02A model only
Others ; Common

Exploded View (GR-Y Series) (3/4)

● For GR75L02Y/52Y Model

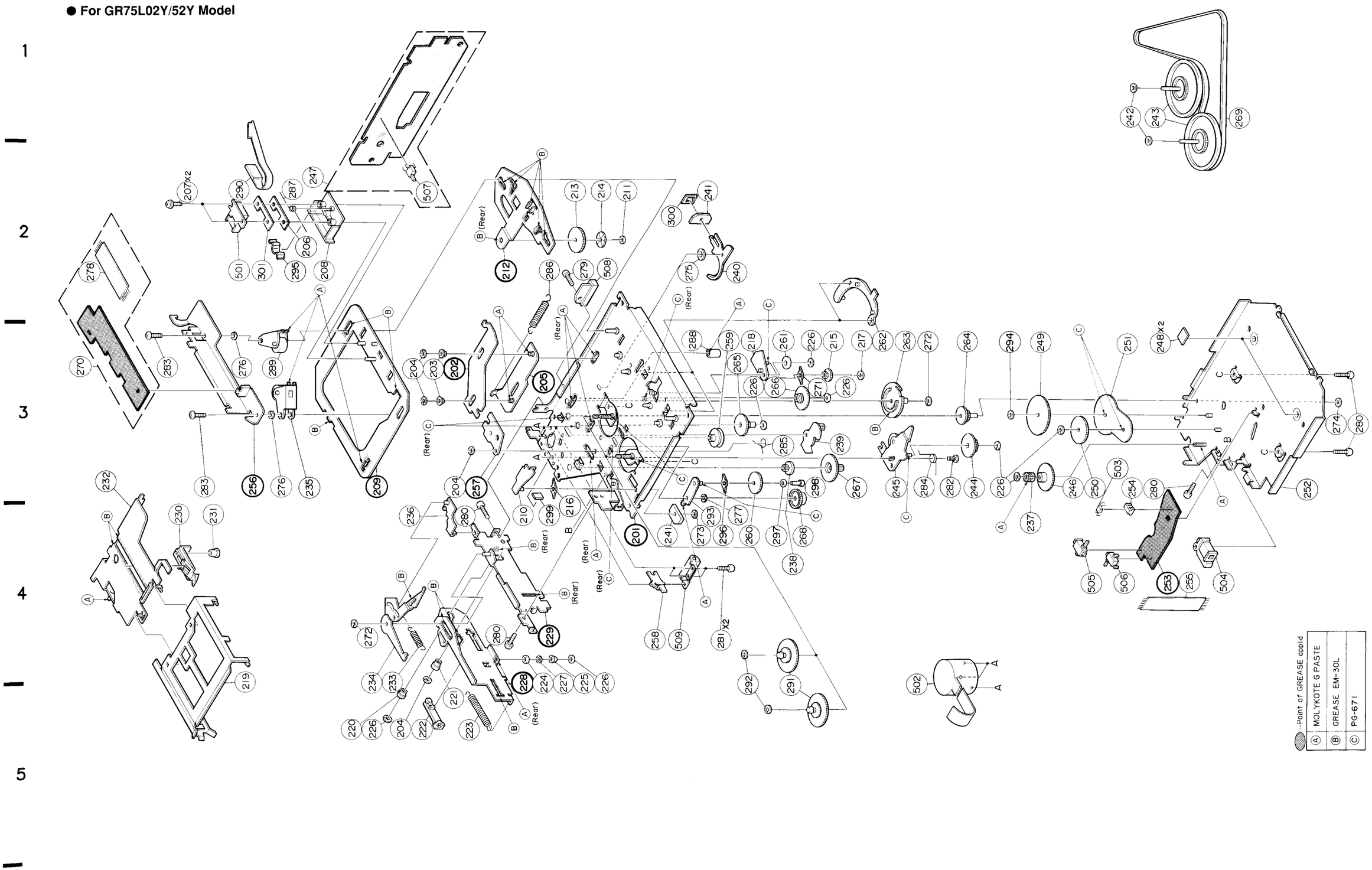

Cassette Deck Assembly Parts List (GR-Y Series) (3/4)

Symbol No.	IN-dex	Part No.	Description
203	3-C	43A11072W01	Roll, Sub Head
204		04B41345P01	Washer, Lock(M1.2)
206	2-B	41A31756W01	Spring, Head
207	2-B	03S40019G03	Screw, F-Locks(M2x4)
208	2-B	43B12545W01	Tape, Guide
210	4-C	01A10206W01	Assy., Riv Lever R/F Sol.
211	2-D	04B41345P29	Washer, Lock(M2.6)
213	2-D	44A10295W01	Gear, Sensor
214	2-D	14A10681W01	Reflector
215	3-E	44A30480W01	Gear, Planet
216		41A10097W02	Spring, Clutch
217	3-E	04B41345P35	Washer, Lock(M1.7)
218	3-E	01A30824W01	Assy., Riv Lever Reverse
219	4-B	07B40283W01	Holder, Cassette
220	5-B	43A12583W01	Roller, Eject
221	5-C	43A63281F01	Roller, Plate Base
222	5-C	44A82206F01	Rack
223	5-C	41B10386W03	Spring, GR(Rack)
224	4-C	43A10121W01	Roller, Eject(A)
225	4-D	43A10360W01	Roller, Eject(B)
226		04B41345P11	Washer, Lock(M1.2)
227	4-D	43A12377W01	Roller, Eject(C)
230	4-A	45B10376W01	Slider
231	4-B	47A63278F01	Shaft, Slider
232	4-A	01A10212W01	Assy., Riv Plate Base
233	4-C	41B10386W01	Spring, Eject Arm
234	4-B	01A21754W01	Assy., Riv Eject Arm(A)
235	3-B	01B30863W02	Assy., Pinch Roller
236	4-C	45A10087W01	Lever, Pack In SW.
237	4-F	44A20314W01	Pinion, Eject
238	4-E	44A13617W01	Gear, Motor Idler(B)
239	3-E	01A10201W02	Assy., Riv Lever Pause
240	2-D	45A40725W01	Lever, Play Sol.
241		76T10374W01	Chip
242	1-G	04S40075G05	Washer, Polyslider (M2.1)
243	1-G	01A10368W01	Assy., Flywheel
244	3-F	44A10141W01	Gear, Eject Idler
245	3-E	01A10205W02	Assy., Riv Lever Clutch(A)
246	3-F	44A10145W01	Gear, Eject
☆ 247	2-B	01V23700W03	Assy., GR Control P.C. Board

Notes: ☆ ; For GR75L02Y model only ◇ ; For GR75L52Y model only
Others ; Common

Note : The parts without parts list are not supplied.

Symbol No.	IN-dex	Part No.	Description
◇ 247		01V44200W74	Assy., GR Control P.C. Board
248	3-G	43A41656W01	Spacer, UHMW
249	3-F	44A11063W01	Gear, Bottom(A)
250	3-F	44A11064W01	Gear, Bottom(B)
251	3-G	34A11122W02	Washer, GR
252	3-H	01A10210W02	Assy., Riv. Cover Bottom
254	3-G	15B11065W01	Guide, Photo
255	4-G	30T15126W01	Wire, PC Sensor(7P)
258	4-D	45A10101W01	Lever, Eject Sol.
259	3-D	49A10131W01	Pulley, Idler
260	4-E	44A10133W01	Gear, Take Up
261	3-E	44A10134W01	Gear, Sun
262	3-E	44B10135W01	Gear, Fix
263	3-E	44B21670W01	Gear, Pause
264	3-F	44A10137W01	Gear, Pause Idler(A)
265	3-D	44A10379W01	Gear, Pause Idler(B)
266	3-E	44A10138W01	Gear, Reverse Idler
267	3-E	44A10139W01	Gear, Motor Idler
268	4-E	44A11062W01	Gear, Reel Idler
269	1-G	42A10380W01	Belt, GR
270	3-A	01V33300W03	Assy., GR Audio P.C. Board
271	3-E	41A30475W01	Spring, Clutch
272	3-F	04B41345P15	Washer, Lock(M1.2)
273		04B41345P02	Washer, Lock(M1.7)
274	3-H	04B41345P17	Washer, Lock(M1)
275	2-D	04B41345P30	Washer, Lock(M3.1)
276	3-B	04B41345P32	Washer, Lock(M3.1)
277	4-E	04B41345P37	Washer, Lock(M2.1)
278	2-A	30T15126W02	Wire, PC Joint 7P
279	2-D	03S44205G78	Screw, Pan(M2x6)
280		03S44205G30	Screw, Pan(M2.6x4)
281	4-D	03S72235F53	Screw, Pan(M2x3.3)
282	3-F	03A12132W02	Screw, Eject Clutch (M2x2.3)
283		03S43997P64	Screw, Pan(M1.7x3)
284	3-F	41A10384W01	Spring, Eject Clutch
285	3-E	41A10385W01	Spring, Cas. Push
286	2-C	41B10386W02	Spring, Sub Head
287	2-B	41A10387W01	Spring, Pinch Roller
288	3-D	43A12719W01	Roller, Pause
289	3-B	01B30863W01	Assy., Pinch Roller
290	2-B	84T35271W01	Head P.C. Board

Symbol No.	IN-dex	Part No.	Description
291	4-E	01T35403W02	Assy., Reel
292	4-E	04B41345P12	Washer, Lock(M1.7)
293	4-D	01A30161W01	Assy., Riv Lever Take Up
294	3-F	04B41345P34	Washer, Lock(M1.2)
295	2-B	26A20537W01	Shield, Plate
296	4-D	41A40910W01	Spring, Clutch
297	4-E	43A41543W01	Washer, Som(M1.2)
298	3-E	47A41458W01	Pin, Take Up
299	3-C	43A40388W01	Spacer, Polyslider
300	2-D	43A41744W01	Lock, Solenoid
301	2-B	41A41416W01	Spring, Head

Miscellaneous

Symbol No.	IN-dex	Part No.	Description
501	2-B	88T15971W01	Head
☆ 502	4-E	01V23900W60	Assy., Motor(13.2V-105mA)
◇ 502	4-E	01V44200W73	Assy., Motor(13.2V-80mA)
503	3-G	51T15144W01	Sensor, Photo
504	4-G	01T10371W01	R/F Sol. Assy
505	4-F	40T15382W01	SW., Detector (Pack Down)
506	4-G	40T15382W01	SW., Detector (Metal)
507	2-C	40T15222W01	SW., Detector (Pack In)
508	2-D	01T15249W01	Assy., Play Solenoid
509	4-D	01T10369W02	Assy., Eject Solenoid

Notes: ☆ ; For GR75L02Y model only ◇ ; For GR75L52Y model only
Others ; Common

Exploded View (GR75H Series) (4/4)

● For GR75H030/020/130 Model

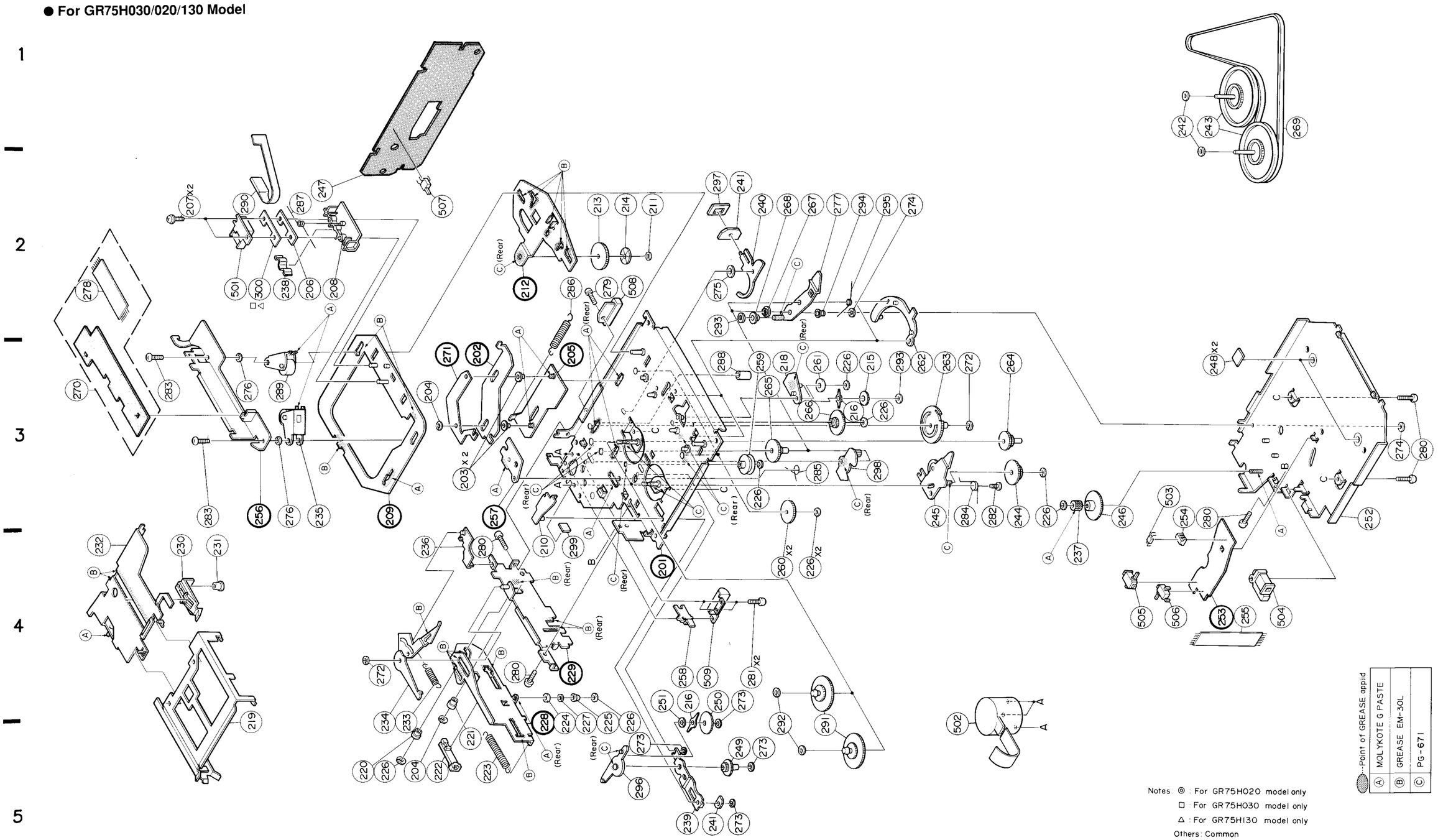

Cassette Deck Assembly Parts List (GR75H Series) (4/4)

Note : The parts without parts list are not supplied.

	Symbol No.	IN-dex	Part No.	Description
	203	3-C	43A31453W01	Roller, Sub Head
	204		04B41345P01	Washer, Lock(M1.2)
	206	2-B	41A31756W01	Spring, Head
	207	2-A	03A38021W01	Screw, Flange(M2x4)
	208	2-B	43B12545W01	Tape, Guide
	210	4-C	01A30462W01	Assy., Riv Lever R/F Sol
	211	2-D	04B41345P29	Washer, Lock(M2.6)
	213	2-D	44A10295W01	Gear, Sensor
	214	2-D	14A10681W01	Reflector
	215	3-E	44A30480W01	Gear, Planet
	216		41A30475W01	Spring, Clutch
	218	3-E	01A30824W01	Assy., Riv Lever Reverse
◎	219	4-B	07B40283W01	Holder, Cassette
□	219	4-B	07B40283W01	Holder, Cassette
△	219	4-B	07B40012W01	Holder, Cassette
	220	5-B	43A12583W01	Roller, Eject
	221	5-C	43A63281F01	Roller, Plate Base
	222	5-C	44A82206F01	Rack
◎	223	5-C	41B10386W03	Spring, GR(Rack)
□	223	5-C	41B10386W03	Spring, GR(Rack)
△	223	5-C	41B10386W04	Spring, GR(Rack)
	224	5-C	43A10121W01	Roller, Eject A
	225	5-D	43A10360W01	Roller, Eject B
	226		04B41345P11	Washer, Lock(M1.2)
	227	5-D	43A12377W01	Roller, Eject C
	230	4-A	45B10376W01	Slider
	231	4-B	47A63278F01	Shaft, Slider
◎	232	4-A	01A10212W01	Assy., Riv Plate Base
□	232	4-A	01A10212W01	Assy., Riv Plate Base
△	232	4-A	01A40024W01	Assy., Riv Plate Base
◎	233	5-C	41B10386W01	Spring, Eject Arm
□	233	5-C	41B10386W01	Spring, Eject Arm
△	233	5-C	41B63283F11	Spring
◎	234	5-C	01A30883W01	Assy., Riv Eject Arm B
□	234	5-C	01A30883W01	Assy., Riv Eject Arm B
△	234	5-C	01A40021W01	Assy., Riv Eject Arm D
	235	3-B	01B30863W02	Assy., Pinch Roller
	236	4-C	45A10087W01	Lever Pack In SW
	237	4-F	44A20314W01	Pinion, Eject
	238	2-B	26A20537W01	Shield, plate
	239	5-D	01A40881W01	Assy., Riv RF Link
	240	2-D	45A40725W01	Lever, Play Sol.
	241		76T10374W01	Chip
	242	1-G	04S40075G05	Washer, Polyslider(M2.1)
	243	1-G	01A30488W01	Assy., Flywheel

	Symbol No.	IN-dex	Part No.	Description
	244	3-F	44A10141W01	Gear, Eject Idler
	245	3-E	01A10205W02	Assy., Riv Lever Clutch A
	246	3-F	44A10145W01	Gear, Eject
	247	2-B	01V33500W45	Assy., GR Control P.C. Board
	248	3-G	43A41656W01	Spacer, UHMW
	249	5-D	44A30481W01	Gear, RF Idler
	250	4-D	44A30483W01	Gear, RF
	251	4-D	04S40075G58	Washer, Polyslider(M2.1)
	252	3-H	01A30463W01	Assy., Riv. Cover Bottom
	254	3-G	15B11065W01	Guide, Photo
	255	4-G	30T15126W01	Wire, PC Sensor(7P)
	258	4-D	45A10101W01	Lever, Eject Sol
	259	3-D	49A30476W01	Pulley, Idler
	260	4-E	44A30482W01	Gear, Take Up
	261	3-E	44A30478W01	Gear, Sun
	262	3-E	44B10135W01	Gear, Fix
	263	3-E	44B30484W01	Gear, Pause
	264	3-F	44A10137W01	Gear, Pause Idler A
	265	3-E	44A30486W01	Gear, Pause Idler B
	266	3-E	44A30479W01	Gear, Reverse Idler
	267	2-E	44A30485W01	Gear, Motor Idler
	268	2-E	44A30487W01	Gear, Motor Clutch
	269	1-G	42A31850W01	Belt, GR
◎	270	3-A	01V43400W38	Assy., GR Audio P.C. Board
□	270	3-A	01V33300W03	Assy., GR Audio P.C. Board
△	270	3-A	01V33300W03	Assy., GR Audio P.C. Board
	272	3-F	04B41345P15	Washer, Lock(M1.2)
	273		04B41345P02	Washer, Lock(M1.7)
	274	3-H	04B41345P17	Washer, Lock(M1)
	275	2-D	04B41345P30	Washer, Lock(M3.1)
	276	3-B	04B41345P32	Washer, Lock(M3.1)
	277	2-E	01A30464W01	Assy., Riv Play Clutch
	278	2-A	30T15126W02	Wire, PC Joint 7P
	279	2-D	03S44205G78	Screw, Pan(M2x6)
	280		03S44205G30	Screw, Pan(M2.6x4)
	281	4-D	03S72235F53	Screw, Pan(M2x3.3)
	282	3-F	03A12132W02	Screw, Eject Clutch(M2x2.3)
	283		03S43997P64	Screw, Pan(M1.7x3)
	284	3-F	41A10384W01	Spring, Eject Clutch
	285	3-E	41A10385W01	Spring, Cas Push
	286	2-C	41B10386W02	Spring, Sub Head
	287	2-B	41A10387W01	Spring, Pinch Roller
	288	3-D	43A12719W01	Roller, Pause
	289	3-B	01B30863W01	Assy., Pinch Roller
◎	290	2-B	84T25151W01	Head P.C. Board

Notes: ◎ ; For GR75H020 model only □ ; For GR75H030 model only
△ ; For GR75H130 model only Others ; Common

Symbol No.		IN-dex	Part No.	Description
□	290	2-B	84T35271W01	Head P.C. Board
△	290	2-B	84T35271W01	Head P.C. Board
	291	5-E	01T35403W01	Assy., Reel
	292	5-E	04B41345P12	Washer, Lock(M1.7)
	293	2-D	04B41345P35	Washer, Lock(M1.7)
	294	2-E	43A30827W01	Spacer, Motor Idler
	295	2-E	41A30490W01	Spring, Play Clutch
	296	5-D	01A40882W01	Assy., Riv Lever RF
	297	2-D	34A48030W01	Washer, Solenoid
	298	3-E	01A10201W02	Assy, Riv Lever Pause
	299	4-C	43A40388W01	Spacer, Polyslider
□	300	2-B	41A41416W01	Spring, Head
△	300	2-B	41A41416W01	Spring, Head
Miscellaneous				
◎	501	2-B	88T15971W01	Head
□	501	2-B	88T35406W01	Head
△	501	2-B	88T35406W01	Head
	502	5-F	01V41100W72	Assy., Motor(11.5v-85mA)
	503	3-G	51T15144W01	Sensor, Photo
	504	4-G	01T10371W01	R/F Sol. Assy.
	505	4-F	40T15382W01	SW., Detector (Pack Down)
	506	4-G	40T15382W01	SW., Detector(Metal)
	507	2-C	40T15222W01	SW., Detector (Pack In)
	508	2-D	01T15249W01	Assy., Play Solenoid
	509	4-D	01T10369W02	Assy., Eject Solenoid

Notes: ◎ ; For GR75H020 model only □ ; For GR75H030 model only
△ ; For GR75H130 model only Others ; Common